REQUEST FOR BID NO. 1702

RELOCATABLE BUILDING INSTALLATIONS AND RENOVATION MAGNOLIA AND NARANCA

Plans for Naranca:

Table of Contents

DSA Approved Plans with Phasing Markups	Pages 1-43
Construction Change Directive (Pending DSA Approval)	Pages 44-50
Project Specification	Pages 51-479

NARANCA ES RELOCATABLE CLASSROOM BUILDINGS

NARANCA ELEMENTARY SCHOOL
1030 NARANCA AVE, EL CAJON, CA 92021
CAJON VALLEY UNION SCHOOL DISTRICT

RUHNAU CLARKE ARCHITECTS

3775 TENTH STREET, RIVERSIDE CALIFORNIA 92501 (951) 684 4664 / 5751 PALMER WAY, SUITE C, CARLSBAD CALIFORNIA 92010 (760) 438 5899
801 16TH STREET, SACRAMENTO, CALIFONIA 95814 (916) 379 8111

KEY
RED CLOUD - PHASE 2
BLUE CLOUD - PHASE 3

AGENCY APPROVAL
File No: ######A\04-125522

IDENTIFICATION STAMP
DIV. OF THE STATE ARCHITECT
APP: 04-125522 INC:
REVIEWED FOR
SS ☑ FLS ☑ ACS ☑
DATE: 08/19/2026

STAMPS

LICENSED ARCHITECT ROGER CLARKE STATE OF CALIFORNIA Exp. 10-31-27

CONSULTANT BRANDING

RUHNAU CLARKE ARCHITECTS

CONTACT LIST

Owner:
Cajon Valley Union School District
750 E Main Street
El Cajon, CA 92020
Contact: *John Heredia*
heredia@cajonvalley.net
858.228.7935

Contact: *Sharon Dobbins:*
dobbinss@cajonvalley.net
619.588.3016

Architect
Ruhnau Clarke Architects
5751 Palmer Way Suite C.,
Carlsbad, CA 92010
Phone:760.438.5899
Contact: Steve Prince
sprince@ruhnauclarke.com
Contact: Roger Clarke
rclarke@ruhnauclarke.com

Civil
Rick Engineering
1770 Iowa St., Suit 100
Riverside, CA, 92507
Phone: *951.782.0707 ex. 2132*
Contact: *Dennis Armstrong*
dgarmstrong@rickengineering.com

Electrical
Johnson Consulting Engineers,INC.
12875 Brookprinter Place, Suite 300
Poway, CA 92064
Phone: 858.679.4030
Contact: *John Frisbie*
jfrisbie@jce-inc.com

Specifications
Spec Studio
9783 E. Maplewood Ave.
ENGLEWOOD, CO 80111
Phone:909.374.2011
Contact:Richard L. Gonser
specstudio@icloud.com

TYPICAL ABBREVIATIONS

@	AT	INT	INTERIOR	UOS	UNDERSIDE OF STRUCTURE
&	AND				
<	ANGLE	JH	JOIST HANGER		
#	POUND OR NUMBER	JT	JOINT	VC	VINYL COATED
		JST	JOIST	VCB	VENTED COVED BASE
ACP	ACOUSTICAL CEILING PANEL			VCT	VINYL COMPOSITION TILE
ACT	ACOUSTICAL CEILING TILE	L	LIGHT	VERT	VERTICAL
AD	AREA DRAIN	LAM	LAMINATE	VIF	VERIFY IN FIELD
AFF	ABOVE FINISHED FLOOR	LO	LOW	VSF	VINYL SHEET FLOORING
ALUM	ALUMINUM	LT	LIGHT	VTR	VENT THROUGH ROOF
AWP	ACOUSTICAL WALL PANEL	LVR	LOUVER	VWC	VINYL WALL COVERING
		LVT	LUXURY VINYL TILE		
BD	BOARD			W/	WITH
BLKG	BLOCKING	MACH	MACHINE	W/O	WITHOUT
BOS	BOTTOM OF STRUCTURE	MAX	MAXIMUM	WACP	WASHABLE ACOUSTIC CEILING PANEL
BOT	BOTTOM	MANF	MANUFACTURER		
BYND	BEYOND	MECH	MECHANICAL	WAF	WOOD ATHLETIC FLOORING
		MFR	MANUFACTURER		
CAB	CABINET	MH	MANHOLD	WD	WOOD
CBU	CEMENT BACKER UNIT	MIN	MINIMUM	WI	WOODWORKING INSTITUTE
CF	CUBIC FEET	ML	METAL LATH		
CIP	CAST IN PLACE	MO	MASONRY OPENING	WIN	WINDOW
CJ	CONTROL JOINT	MS	METAL STUD	WP	WALL PADDING
CL	CENTERLINE	MTD	MOUNTED	WWF	WELDED WIRE FABRIC
CLF	CHAIN LINK FENCE	MTL	METAL		
CLG	CEILING	MPS	METAL PANEL SYSTEM		
CLR	CLEAR				
CMU	CONCRETE MASONRY UNIT	NIC	NOT IN CONTRACT		
COL	COLUMN	NTS	NOT TO SCALE		
CONC	CONCRETE	NO	NUMBER		
CONT	CONTINUOUS				
CPL	CEMENT PLASTER	OC	ON CENTER		
CPT	CARPET	OD	OUTSIDE DIAMETER		
		OFCI	OWNER FURNISHED/ CONTRACTOR INSTALLED		
DBL	DOUBLE				
DDC	DOUBLE DETECTOR CHECK	OFOI	OWNER FURNUSHED/ OWNER INSTALLED		
DEMO	DEMOLISH OR DEMOLITION				
DET	DETAIL	OH	OPPOSITE HAND/ OVERHEAD		
DF	DRINKING FOUNTAIN				
DIA	DIAMETER	OPNG	OPENING		
DIM	DIMENSION	OPP	OPPOSITE		
DL	DOOR LOUVER	OZ	OUNCE		
DN	DOWN				
DP	DEMOUNTABLE PARTITION	P	PAINT OR PAINTED		
DR	DOOR	PA	PLANTING AREA		
DRF	DOOR FRAME	PCC	PRE-CAST CONCRETE		
DS	DOWN SPOUT	PFIN	PRE FINISHED		
DSA	DIVISION OF STATE ARCHITECT	PIV	POST-INDICATOR VALVE		
		PL	PLATE/PROPERTY LINE		
DWGS	DRAWINGS	PLAM	PLASTIC LAMINATE		
		PLAST	PLASTIC		
(E)	EXISTING	PLUMB	PLUMBING		
EA	EACH	PLWD	PLYWOOD		
EJ	EXPANSION JOINT	PT	PRESSURE TREATED		
EL	ELEVATION	PTD	PAINTED		
ELEV	ELEVATOR	PTN	PARTITION		
ENCL	ENCLOSURE	PVC	POLYVINYL CHLORIDE		
EPDM	ETHYLENE PROPYLENE DIENE M-CLASS (ROOFING)				
		R	RADIUS		
EQ	EQUAL	RB	RUBBER BASE		
EQUIP	EQUIPMENT	RCP	REFLECTED CEILING PLAN		
EW	EACH WAY	RD	ROOF DRAIN		
EWC	ELECTRIC WATER COOLER	REF	REFERENCE		
EXIST	EXISTING	REINF	REINFORCED		
EXT	EXTERIOR	RES	RESINOUS FLOORING		
		REQ	REQUIRED		
FC	FINISH CEILING	RM	ROOM		
FD	FLOOR DRAIN	RO	ROUGH OPENING		
FDC	FIRE DEPARTMENT CONNECTION	RQMT	REQUIREMENT		
		RS	ROLLER SHADE		
FE	FIRE EXTINGUISHER	RT	RUBBER TREAD		
FEC	FIRE EXTINGUISHER CABINET				
		SAF	SYNTHETIC ATHLETIC FLOORING		
FF	FLOOR FINISH/FACTORY FINISH	SB	SPLASH BLOCK		
FFE	FURNISHINGS, FIXTURES, & EQUIPMENT	SC	SOLID CORE		
		SHT	SHEATHING		
FG	FINISH GRADE	SIM	SIMILAR		
FH	FIRE HYDRANT	SPEC	SPECIFICED OR SPECIFICATION		
FHC	FIRE HOSE CABINET				
FIN	FINISH	SS	STAINLESS STEEL		
FLR	FLOOR	SSM	SOLID SURFACE MATERIAL		
FND	FOUNDATION				
FO	FACE OF	STC	SOUND TRANSMISSION COEFFICIENT		
FOF	FACE OF FINISH				
FOM	FACE OF MASONRY	STD	STANDARD		
FOS	FACE OF STUD	ST	STAIN		
FR	FIRE RISER	STL	STEEL		
FRP	FIBERGLASS REINFORCED PANEL	STRUCT	STRUCTURE OR STRUCTURAL		
		SUSP	SUSPENDED		
FS	FINISH SURFACE	SV	SHEET VINYL FLOORING		
FURN	FURNISH/FURNITURE				
		T	TILE		
G	GROUT	TB	TACK BOARD		
GA	GAUGE	TC	TOP OF CONCRETE CURB		
GALV	GALVANIZED	TEL	TELEPHONE		
GB	GRAB BAR	TEMP	TEMPORARY		
GL	GLASS	T&G	TONGUE AND GROOVE		
GLULAM	GLUE LAMINATED	TJ	TOOLED JOINT		
GWB	GYPSUM WALLBOARD	TO	TOP OF		
GWWB	WATER RESISTANT GWB	TOC	TOP OF CONCRETE/TOP OF CANOPY		
H	HIGH				
HC	HOLLOW CORE	TOD	TOP OF DRAIN		
HDW	HARDWARE	TOP	TOP OF PARAPET		
HM	HOLLOW METAL	TOR	TOP OF ROOF		
HORIZ	HORIZONTAL	TOS	TOP OF SHEATHING		
HP	HIGH POINT	TOW	TOP OF WALL		
HR	HOUR	TS	TUBE STEEL		
HT	HEIGHT	TSB	TOP SET BASE		
HVAC	HEATING, VENTILATING, AND AIR CONDITIONING	TPD	TOILET PAPER DISPENSER		
		TWP	TACKABLE WALL PANEL		
		TYP	TYPICAL		
ICB	INTEGRAL COVED BASE				
ID	INSIDE DIAMETER	UC	UNDERCUT/UNDER COUNTER		
IGU	INSULATED GLAZING UNIT				
ILO	IN LIEU OF	UNO	UNLESS NOTED OTHERWISE		
INSUL	INSULATION				

GENERAL NOTES

1. THE CONTRACTOR IS SOLELY RESPONSIBLE FOR MEANS, METHODS, SEQUENCE, TECHNIQUES OR PROCEDURES NECESSARY FOR PERFORMING, SUPERINTENDING OR COORDINATING ALL PORTIONS OF THE WORK OF CONSTRUCTION IN ACCORDANCE WITH THE CONTRACT DOCUMENTS AND ANY HEALTH OR SAFETY PRECAUTIONS REQUIRED BY ANY REGULATORY AGENCIES.
2. THE CONTRACTOR SHALL COMPLY WITH CALIFORNIA FIRE CODE, CHAPTER 33 FOR FIRE SAFETY DURING CONSTRUCTION.
3. CONTRACTOR WILL BE REQUIRED TO PROVIDE AND INSTALL ALL EQUIPMENT AND RELATED ITEMS AS SHOWN IN THESE DOCUMENTS AND AS SPECIFIED. IT SHALL BE THE CONTRACTOR'S RESPONSIBILITY TO VERIFY ALL EXISTING CONDITIONS IN THE FIELD PRIOR TO BID AND TO DETERMINE THE WORK NECESSARY TO COMPLETE THE PROJECT.
4. ALL WORK SHALL CONFORM TO 2025 TITLE 24, CALIFORNIA CODE OF REGULATIONS (C.C.R.).
5. FABRICATION AND INSTALLATION OF DEFERRED SUBMITTAL ITEMS SHALL NOT BE STARTED UNTIL CONTRACTOR'S DRAWINGS, SPECIFICATIONS, AND ENGINEERING CALCULATIONS FOR THE ACTUAL SYSTEMS TO BE INSTALLED HAVE BEEN ACCEPTED AND SIGNED BY THE ARCHITECT OR STRUCTURAL ENGINEER AND APPROVED BY THE DSA. LIST DEFERRED SUBMITTAL ITEMS FOR THIS PROJECT.
6. CHANGES TO THE APPROVED DRAWINGS AND SPECIFICATIONS SHALL BE MADE BY AN ADDENDUM OR A CONSTRUCTION CHANGE DOCUMENT (CCD) APPROVED BY THE DIVISION OF THE STATE ARCHITECT, AS REQUIRED BY SECTION 4-338, PART 1, TITLE 24, CCR.
7. A "DSA CERTIFIED" PROJECT INSPECTOR, EMPLOYED BY THE DISTRICT (OWNER) AND APPROVED BY THE DIVISION OF THE STATE ARCHITECT, SHALL PROVIDE CONTINUOUS INSPECTION OF THE WORK. THE DUTIES OF THE INSPECTOR ARE DEFINED IN SECTION 4-342, PART 1, TITLE 24, CCCR. A MINIMUM CLASS **3** INSPECTOR IS REQUIRED.
8. A DSA ACCEPTED TESTING LABORATORY DIRECTLY EMPLOYED BY THE DISTRICT (OWNER) SHALL CONDUCT ALL THE REQUIRED TESTS AND INSPECTIONS FOR THE PROJECT.
9. THE INTENT OF THESE DRAWINGS AND SPECIFICATIONS IS THAT THE WORK OF THE ALTERATION, REHABILITATION OR RECONSTRUCTION IS TO BE IN ACCORDANCE WITH TITLE 24, CCR. SHOULD ANY EXISTING CONDITIONS SUCH AS DETERIORATION OR NON-COMPLYING CONSTRUCTION BE DISCOVERED WHICH IS NOT COVERED BY THE CONTRACT DOCUMENTS WHEREIN THE FINISHED WORK WILL NOT COMPLY WITH TITLE 24, CCR, A CONSTRUCTION CHANGE DOCUMENT (CCD), OR A SEPARATE SET OF PLANS AND SPECIFICATIONS, DETAILING AND SPECIFYING THE REQUIRED WORK SHALL BE SUBMITTED TO AND APPROVED BY DSA BEFORE PROCEEDING WITH THE WORK. (SECTION 4-317(C), PART 1, TITLE 24, CCR).
10. THE ARCHITECT OF RECORD SHALL HAVE THE RIGHT TO MAKE FINAL JUDGMENTS RELATIVE TO SUBMITTAL DRAWING REVISIONS IN ORDER TO ENSURE COMPLIANCE WITH ENGINEERING STANDARDS, APPLICABLE CODES, AND ARCHITECTURAL INTENT.
11. CONTRACTOR SHALL VERIFY ALL DIMENSIONS AND LOCATIONS OF EXISTING CONDITIONS ON THE JOB SITE PRIOR TO THE START OF ANY WORK. NOTIFY THE ARCHITECT IMMEDIATELY OF ANY DISCREPANCIES BETWEEN ACTUAL FIELD CONDITIONS AND CONSTRUCTION DOCUMENTS. EXISTING CONDITIONS ARE INDICATED AS A RESULT OF INFORMATION SHOWN ON AVAILABLE DOCUMENTS. ANY DAMAGE TO EXISTING CONDITIONS IS THE SOLE RESPONSIBILITY OF THE CONTRACTOR.
12. THE EXISTENCE OR LOCATION OF ANY UNDERGROUND UTILITIES, PIPES, OR STRUCTURE SHOWN ON THESE PLANS WERE OBTAINED BY A SEARCH OF AVAILABLE RECORDS TO THE BEST OF OUR KNOWLEDGE. EXISTING UTILITIES ARE AS SHOWN ON THESE PLANS. THE CONTRACTOR SHALL ASCERTAIN THE TRUE VERTICAL AND HORIZONTAL LOCATION AND SIZE OF ALL UNDERGROUND UTILITIES AND SHALL BE RESPONSIBLE FOR DAMAGE TO ANY PUBLIC OR PRIVATE UTILITIES SHOWN OR NOT SHOWN HEREON.
13. THE CONTRACTOR SHALL BE SOLELY RESPONSIBLE FOR ADEQUACY AND SAFETY OF THE DESIGN/ERECTION OF BRACING, SHORING, TEMPORARY SUPPORTS AND SCAFFOLDING.
14. UNDER NO CIRCUMSTANCE SHALL WORKING DIMENSIONS BE SCALED FROM PLANS, SECTIONS, OR DETAILS ON THE DRAWINGS.
15. ALL STANDARDS, MATERIALS AND WORKMANSHIP SHALL COMPLY WITH THE STATE BUILDING CODES, ORDINANCES, REGULATIONS, AND LAWS.
16. WHERE ANY CONFLICT OCCURS BETWEEN THE REQUIREMENTS OF FEDERAL, STATE AND LOCAL LAWS, CODES, ORDINANCES, RULES AND REGULATIONS, THE MOST STRINGENT SHALL GOVERN.
17. ITEMS MARKED "TYP." OR "TYPICAL" SHALL APPLY IN ALL CASES UNLESS SPECIFICALLY INDICATED OTHERWISE.
18. THE CONTRACTOR SHALL BE RESPONSIBLE FOR COORDINATION OF REQUIREMENTS BETWEEN THE DISCIPLINES (ARCHITECTURAL, STRUCTURAL, PLUMBING, MECHANICAL, AND ELECTRICAL, ETC.) AND BETWEEN DRAWING AND SPECIFICATION IN ORDER TO ENSURE THAT ALL ITEMS SHOWN IN RELATIONSHIP TO ONE ANOTHER OR SHOWN IN MULTIPLE LOCATIONS ARE IN AGREEMENT. THE CONTRACTOR SHALL IMMEDIATELY NOTIFY THE ARCHITECT REGARDING ANY DISCREPANCIES, ERRORS, OMISSIONS OR INCONSISTENCIES AND SHALL NOT PROCEED WITH THE WORK UNTIL CLARIFICATION HAS BEEN ISSUED BY THE ARCHITECT.
19. GRADING PLANS DRAINAGE IMPROVEMENTS, ROAD & ACCESS REQUIREMENTS AND ENVIRONMENTAL HEALTH CONSIDERATIONS SHALL COMPLY WITH ALL LOCAL ORDINANCES. INSPECTOR OF RECORD (IOR CLASSIFICATION 1).
20. ALL CONSTRUCTION AND DEMOLITION SHALL BE IN ACCORDANCE WITH CHAPTER 33 OF THE CBC AND CFC, AND THE WRITTEN SITE FIRE SAFETY PLAN. THE FIRE SAFETY PLAN WILL BE SUBMITTED WITH THE DSA-102IC. REFER TO DSA BULLETIN BU 24-05. PLEASE SEE SPECIFICATION SECTION **01 70 00** FOR ADDITIONAL INFORMATION.

NOTE:
THE INTENT OF THESE DRAWINGS AND SPECIFICATIONS IS THAT THE WORK OF THE ALTERATION, REHABILITATION OR RECONSTRUCTION IS TO BE IN ACCORDANCE WITH TITLE 24, CCR. SHOULD ANY EXISTING CONDITIONS SUCH AS DETERIORATION OR NON-COMPLYING CONSTRUCTION BE DISCOVERED WHICH IS NOT COVERED BY THE CONTRACT DOCUMENTS WHEREIN THE FINISHED WORK WILL NOT COMPLY WITH TITLE 24, CCR, A CONSTRUCTION CHANGE DOCUMENT (CCD), OR A SEPARATE SET OF PLANS AND SPECIFICATIONS, DETAILING AND SPECIFYING THE REQUIRED WORK SHALL BE SUBMITTED TO AND APPROVED BY DSA BEFORE PROCEEDING WITH THE WORK. (SECTION 4-317(C), PART 1, TITLE 24, CCR).

REGIONAL MAP

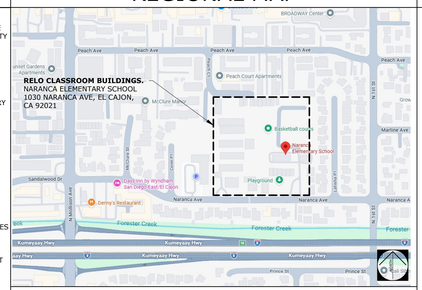

SITE MAP

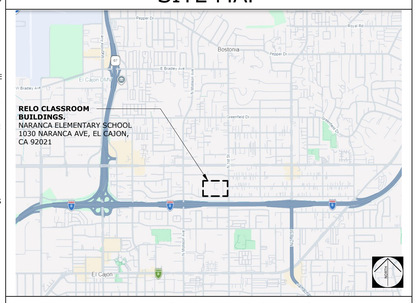

APPLICABLE CODES

PARTIAL LIST OF APPLICABLE CODES:
2025 CALIFORNIA ADMINISTRATIVE CODE, PART 1, TITLE 24 C.C.R.
2025 CALIFORNIA BUILDING CODE (CBC), PART 2, TITLE 24 C.C.R.
2025 CALIFORNIA ELECTRICAL CODE (CEC), PART 3, TITLE 24 C.C.R.
2025 CALIFORNIA MECHANICAL CODE (CMC) PART 4, TITLE 24 C.C.R.
2025 CALIFORNIA PLUMBING CODE (CPC), PART 5, TITLE 24 C.C.R.
2025 CALIFORNIA ENERGY CODE, PART 6, TITLE 24 C.C.R.
2025 CALIFORNIA WILDLAND-URGAN INTERFACE CODE (CWUIC), PART 7, TITLE 24 C.C.R.
2025 CALIFORNIA FIRE CODE (CFC), PART 9, TITLE 24 C.C.R.
2025 CALIFORNIA EXISTING BUILDING CODE (CEBC), PART 10, TITLE 24 C.C.R.
2025 CALIFORNIA GREEN BUILDING STANDARDS CODE (CALGREEN), PART 11, TITLE 24 C.C.R.
2025 CALIFORNIA REFERENCED STANDARDS, PART 12, TITLE 24 C.C.R.
TITLE 19 C.C.R., PUBLIC SAFETY, STATE FIRE MARSHAL REGULATIONS.

APPLICABLE STANDARDS
FOR A LIST OF APPLICABLE STANDARDS, INCLUIDING CALIFORNIA AMENDMENTS TO THE NFPA STANDARDS, REFER TO CBC CHAPTER 35 AND CFC CHAPTER 80.

APPLICABLE AGENCIES

STATE OF CALIFORNIA

DEPARTMENT OF GENERAL SERVICES
DIVISION OF THE STATE ARCHITECT
10920 VIA FRONTERA ROAD, STE. 300
SAN DIEGO, CA 92127
TEL: (858) 674-5400

SHEET INDEX

GENERAL
G-1 TITLE SHEET & SHEET INDEX

CIVIL
C-01 TITLE SHEET
C-02 SITE PLAN

ARCHITECTURE - SITE
AS-2.0 OVERALL SITE PLAN
AS-3.0 ENLARGED SITE PLANS & SITE DETAILS
ASD-1.0 SITE DETAILS
ASD-2.0 SITE DETAILS

ARCHITECTURE
A1-1.1 24" X 40" RELO FLOOR PLAN
A1-1.2 30" X 32" RELO FLOOR PLAN
A1-1.0 12" X 40" RELO FLOOR PLAN
AD-1.2 ACCESSIBILITY & MISC. DETAILS

ELECTRICAL
E1.0 ELECTRICAL LEGEND AND NOTES
E1.1 OVERALL SITE PLAN
E1.2 ELECTRICAL DETAILS
E2.0 TITLE 24 FORMS
E3.1 FLOOR PLAN - POWER
E3.2 ONE LINE DIAGRAM AND PANEL SCHEDULE
E4.0 COMMUNICATION LEGEND AND NOTES
E4.1 FLOOR PLAN - COMM.
E4.2 COMMUNICATION DETAILS
E4.3 COMMUNICATION DETAILS
E4.4 COMMUNICATION DETAILS
E4.5 AUDIO VISUAL DETAILS
E4.6 AUDIO VISUAL DETAILS
E5.1 FLOOR PLAN - FIRE ALARM
E5.2 FIRE ALARM SCHEDULE AND NOTES
E5.3 FIRE ALARM RISER DIAGRAM AND CALCS

DWG_V1 (12x40) AMS 02-124199
TS TITLE SHEET
A1.0 TYPICAL FLOOR PLAN
A1.2 RESTROOM FLOOR PLAN
S1.0 CONCRETE FOUNDATION PLAN CONCRETE FLOORS (100 PSF MAX FLOOR LIVE LOAD)
S1.4 CONCRETE FOUNDATION DETAILS
S1.5 CONCRETE FOUNDATION DETAILS
S1.6C DOUBLE PLATE ANCHORAGE FOUNDATION DETAILS
S1.7 CONCRETE FOUNDATION OPTIONAL UTILITIES CONDUITS IN FOOTINGS
S2.0 WOOD FOUNDATION PLAN & DETAILS - PLYWOOD FLOORS ONLY - 100 PSF MAX FLOOR L.L.
S10.0 TYPICAL RAMP PLANS & NOTES
S10.1 RAMP DETAILS
P3.0 PLUMBING ISOMETRICS DRAWINGS

DWG_V1 (24x40) AMS 02-124190
TS-M TITLE SHEET
A1.0-M TYPICAL FLOOR PLAN
A2.2-M TYPICAL ROOF DETAIL METAL STANDING SEAM
S2.1-M WOOD FOUNDATION PLAN 50 PSF LIVE LOAD + 15 PSF PARTITION LOAD
S2.4-M WOOD FOUNDATION DETAILS
S3.0-M FLOOR FRAMING PLAN & DETAILS FOR PLYWOOD FLOOR
S4.2-M ROOF FRAMING DETAILS
S10.0-M TYPICAL RAMP PLANS & NOTES
S10.1-M RAMP DETAILS
M1.0-M TYPICAL REFLECTED CEILING PLAN

DWG_V1 (30x32) AMS 02-124191
TS-N TITLE SHEET
A1.0 -N CLASSROOM FLOOR PLAN
S3.0 -N FLOOR FRAMING PLAN & DETAILS FOR PLYWOOD FLOOR
S4.2 -N ROOF FRAMING DETAILS
S10.0 -N TYPICAL RAMP PLANS & NOTES
S10.1 -N RAMP DETAILS
TOTAL SHEET COUNT: 55

DSA 1

APPLICATION FOR APPROVAL OF PLANS AND SPECIFICATIONS

Please print or type all information or you may complete online and print for signatures. All fields must be filled in per instructions (see page 5).

1. Name of Facility: Naranca ES
2. School District (or State Agency): Cajon Valley USD
   District/Agency Mailing Address: 750 E. Main St., El Cajon, Ca. 92020
3. Dist. Superintendent: Dr. David Miyashiro
   Work Email: miyashirod@cajonvalley.net Work Phone: (619) 588-3016
4. Facilities Director: Eric Johnston Title: Facilities Director
   Work Email: johnstone@cajonvalley.net Work Phone: (619) 588-3181

APPLICATION PURPOSE: *(Check applicable box and provide application number where required.)*
A.1 ☐ Initial Registration for Project Submittal *(DSA will create new application number).*
A.2 ☐ Revised Registration for Project Submittal. DSA Application #: _____
A.3 ☑ Project Submittal. Is the project registered? ☐ Yes ☐ No, If yes, then DSA Application # is 04-125522

PROJECT SCOPE: *(For questions 5-10, please provide specific building names per instructions.)*
5. Construction of: _____
5a. Design of Pre-Check (PC) Structure for: _____
6. Addition to: _____
7. Relocation of: Stockpile (1) 24x40 CR Bldg, (1) 12x40 CR. Bldg, (2) 30x32 CR Bldgs, (1) 12x24 RR Bldg
8. Alteration to: Associated Site Work
9. Rehabilitation of: _____
   DSA EDCR Application Number (required): _____
10. Reconstruction of: _____

DSA USE ONLY					
	FEE $CHED.	CORRECT FEE	FEE PAID	UP/OP	REFUND
AC					
SS					
FLS					
DSA FILE NO.	DSA APP. NO.	DATE ASSIGNED	ESTIMATED COST	LANDSCAPE IRRIGATION	
			1,000,000.00		

DGS DSA 1 (Revised 11/24/25) DEPARTMENT OF GENERAL SERVICES Page 1 of 8 STATE OF CALIFORNIA

GENERAL INSPECTION NOTES

THE CALIFORNIA ENERGY CODE SECTION 10-103 REQUIRES ACCEPTANCE TESTING ON ALL NEWLY INSTALLED LIGHTING CONTROLS, MECHANICAL SYSTEMS, ENVELOPES, AND PROCESS EQUIPMENT AFTER INSTALLATION AND BEFORE PROJECT COMPLETION. AN ACCEPTANCE TEST IS A FUNCTIONAL PERFORMANCE TEST TO HELP ENSURE THAT NEWLY INSTALLED EQUIPMENT IS OPERATING AND IN COMPLIANCE WITH THE ENERGY CODE.

LIGHTING CONTROLS ACCEPTANCE TESTS MUST BE PERFORMED BY A CERTIFIED LIGHTING CONTROLS ACCEPTANCE TEST TECHNICIAN (ATT).

MECHANICAL SYSTEM ACCEPTANCE TESTS MUST BE PERFORMED BY A CERTIFIED MECHANICAL ATT FOR PROJECTS SUBMITTED ON OR AFTER OCTOBER 1, 2021.

ENVELOPE AND PROCESS EQUIPMENT ACCEPTANCE TESTS SHALL BE PERFORMED BY THE INSTALLING CONTRACTOR, ENGINEER/ARCHITECT OF RECORD OR THE OWNER'S AGENT.

A LISTING OF CERTIFIED ATT CAN BE FOUND AT: HTTPS://WWW.ENERGY.CA.GOV/PROGRAMS-AND-TOPICS/PROGRAMS/ACCEPTANCE-TEST-TECHNICIAN-CERTIFICATION-PROVIDER-PROGRAM/ACCEPTANCE.

THE ACCEPTANCE TESTING PROCEDURES MUST BE REPEATED, AND DEFICIENCIES MUST BE CORRECTED BY THE BUILDER OR INSTALLING CONTRACTOR UNTIL THE CONSTRUCTION/INSTALLATION OF THE SPECIFIED SYSTEMS CONFORM AND PASS THE REQUIRED ACCEPTANCE CRITERIA.

PROJECT INSPECTORS WILL COLLECT THE FORMS TO CONFIRM THAT THE REQUIRED ACCEPTANCE TESTS HAVE BEEN COMPLETED.

SCOPE OF WORK

1. PLACEMENT OF (1) NEW 24'X40' STOCKPILE CLASSROOM BUILDING (44) PER A# 02-124190, 960 SQ. FT.
2. PLACEMENT OF (2) NEW 30'X32' STOCKPILE CLASSROOM BUILDING (27B,27C) PER A# 02-124191, 2,880 SQ. FT.
3. INSTALLATION OF (1) NEW 12'X40' STOCKPILE RESTROOM BUILDING (RR) PER A# 02-124199, 480 SQ. FT.
4. PLACEMENT OF (1) NEW 12'X40' STOCKPILE CLASSROOM BUILDING (27D) PER A# 02-124199, 480 SQ. FT.
5. MINOR SITE IMPROVEMENTS
   a) Accessible gates
   b) Ramp Landings
   c) Detectable warning surface
   d) Paving @ Stockpiles

STATEMENT OF GENERAL CONFORMANCE

FOR ARCHITECT/ENGINEERS WHO UTILIZE PLANS, INCLUDING BUT NOT LIMITED TO SHOP DRAWINGS, PREPARED BY OTHER LICENSED DESIGN PROFESSIONALS AND/OR CONSULTANTS

APPLICATION NO: 04-125522

FILE NO: 1-16-21

THE DRAWINGS IDENTIFIED AS FOLLOWS:

☐ ALL DRAWING SHEETS INCLUDED IN THIS SET NOT BEARING MY STAMP AND SIGNATURE.

☐ DRAWING SHEETS DENOTED IN THE SHEET INDEX AS FOLLOWS: _____

☐ DRAWING SHEETS INCLUDED UNDER THE FOLLOWING PC APPROVAL(S): _____

HAVE BEEN PREPARED BY OTHER DESIGN PROFESSIONALS OR CONSULTANTS WHO ARE LICENSED AND AUTHORIZED TO PREPARE SUCH DRAWINGS (PLANS) IN THIS STATE. THEY HAVE BEEN EXAMINED BY ME FOR:

1) DESIGN INTENT AND APPEAR TO MEET THE APPROPRIATE REQUIREMENTS OF TITLE 24, CALIFORNIA CODE OF REGULATIONS AND THE PROJECT SPECIFICATIONS PREPARED BY ME, AND

2) COORDINATION WITH MY DRAWINGS (PLANS) AND SPECIFICATINOS AND ARE ACCEPTABLE FOR INCORPORATION INTO THE CONTRUCTION OF THIS PROJECT.

PER TITLE 24, PART 1, SECTION 4-316(b): THIS STATEMENT OF GENERAL CONFORMANCE SHALL NOT BE CONSTRUED AS RELIEVING ME OF MY RIGHTS, DUTIES, AND RESPONSIBILITIES UNDER SECTIONS 17302 AND 81138 OF THE EDUCATION CODE AND SECTIONS 4-336, 4-341 AND 4-344 OF TITLE 24, PART 1.

SIGNATURE DATE 8/18/26

ROGER CLARKE	**C-21340**	**10-31-25**
PRINT NAME	LICENSE NUMBER	EXPIRATION DATE

ARCHITECTURAL SYMBOLS

BUILDING SECTION
DIRECTION OF VIEW CUT
DIRECTION OF VIEW
VIEW ON SHEET
SHEET ON WHICH DETAIL OCCURS
(1 SIM A101)

EXTERIOR ELEVATION
DIRECTION OF VIEW
VIEW ON SHEET
SHEET ON WHICH DETAIL OCCURS
(1 SIM A101)

DETAIL REFERENCE TO DRAWINGS
VIEW ON SHEET
SHEET ON WHICH DETAIL OCCURS
DIRECTION OF VIEW
(1 SIM A101)

ROOM TAGS
ROOM NAME — Room name
ROOM NUMBER — 1001

RCP ROOM TAGS
CEILING HEIGHT A.F.F. — ROOM NAME 101 / 12'-0"

EGRESS ROOM TAGS
OCCUPANT LOAD — Room name 1001
OCCUPANT LOAD FACTOR — Room Area # / ###

KEYNOTE
CONSTRUCTION KEY NOTE
NUMBER
ASSOCIATED DETAIL REFERENCE
(1 SIM A101)

CASEWORK IDENTIFICATION:
DEPTH
HEIGHT
INDICATES SPECIAL CONDITION
W.I.C. NUMBER
LENGTH
LOCK
EXPLANATION OF SPECIAL CONDITION IF NEEDED
(60 102 102 M=REVERSE)

DOOR TAG
DOOR TAG — 101A
DOOR RATING — 20 MIN.

WINDOW TAG
WINDOW TAG — A

INTERIOR ELEVATION
INTERIOR ELEVATION VIEW — 101-1
SHEET ON WHICH INTERIOR ELEVATION OCCURS — 101-4 A1-7.1 101-2 101-3

NARANCA ES RELOCATABLE CLASSROOM BUILDINGS:

PROJECT No. :1-16-21
8/17/2026 5:17:37 PM

DRAWN BY: CHECKED BY:
DELTA # ____ DATE ____ ☐ ADD ☐ AFO ☐ CCD ☐ REV
DELTA # ____ DATE ____ ☐ ADD ☐ AFO ☐ CCD ☐ REV
DELTA # ____ DATE ____ ☐ ADD ☐ AFO ☐ CCD ☐ REV
DELTA # ____ DATE ____ ☐ ADD ☐ AFO ☐ CCD ☐ REV

RUHNAUCLARKE.COM

3775 TENTH STREET, RIVERSIDE CALIFORNIA 92501 (951) 684 4664/ 5751 PALMER WAY, SUITE C, CARLSBAD CALIFORNIA 92010 (760) 438 5899/ 801 16TH STREET SACRAMENTO, CA 95814 (916) 379 8111

NARANCA ES RELOCATABLE CLASSROOM BUILDINGS
NARANCA ELEMENTARY SCHOOL
1030 NARANCA AVE, EL CAJON, CA 92021
CAJON VALLEY UNION SCHOOL DISTRICT

TITLE SHEET & SHEET INDEX

G-1

1-16-21

NARANCA ELEMENTARY SCHOOL
RELOCATABLE CLASSROOM BUILDINGS
EL CAJON, CA

GENERAL

1. ALL WORK SHALL BE IN ACCORDANCE WITH THESE PLANS, THE PROJECT SPECIFICATIONS, THE GEOTECHNICAL ENGINEER'S REPORT, THE STANDARD SPECIFICATIONS FOR PUBLIC WORKS CONSTRUCTION ("GREEN BOOK"), AND THE 2026 CALIFORNIA BUILDING CODE. ALL REFERENCE SPECIFICATIONS AND STANDARDS SHALL BE THE LATEST EDITION UNLESS OTHERWISE NOTED.
2. WHEN A TECHNICAL CONFLICT IS FOUND TO EXIST IN THE CONTRACT DOCUMENTS THAT CAN NOT BE RESOLVED BY REFERENCE TO PRECEDENCE PROVISIONS IN THE "GREEN BOOK", THE CONTRACTOR SHALL IMMEDIATELY REPORT SAID CONFLICT TO THE ENGINEER FOR RESOLUTION.
3. ALL MATERIALS AND METHODS ARE SUBJECT TO THE APPROVAL OF THE ENGINEER.
4. OFF-SITE CONSTRUCTION PERMITS SHALL BE OBTAINED BY THE CONTRACTOR FROM THE AGENCY HAVING JURISDICTION (AHJ).
5. ALL WORK UNDER THIS GRADING PERMIT SHALL BE LIMITED TO WORK WITHIN THE PROPERTY LINES. ALL WORK WITHIN THE ROAD RIGHT-OF-WAY WILL REQUIRE SEPARATE PLANS AND A SEPARATE REVIEW/APPROVAL (PERMIT) FROM THE AGENCY HAVING JURISDICTION.
6. NO MATERIAL OR EQUIPMENT SHALL BE STORED IN THE PUBLIC RIGHT OF WAY WITHOUT OBTAINING A SEPARATE PERMIT FOR THAT PURPOSE.
7. THE CONTRACTOR SHALL NOT OPERATE ANY FIRE HYDRANT OR WATER MAIN VALVES WITHOUT APPROPRIATE AGENCY AUTHORIZATION. CONTRACTOR SHALL COORDINATE WITH THE APPROPRIATE WATER COMPANY FOR VALVE OPERATION AND WATER REQUIREMENTS.
8. AS-BUILT DRAWINGS SHALL BE PROVIDED BY THE CONTRACTOR TO THE ENGINEER OF RECORD, WHO SHALL PROVIDE RECORD DRAWINGS TO THE PROJECT ARCHITECT.
9. NO DEMOLITION SHALL BEGIN UNTIL PLANS INCLUDING THE DEMOLITION WORK HAVE BEEN APPROVED BY DSA.
10. CONTRACTOR SHALL RELOCATE AND/OR REPLACE LANDSCAPING, SPRINKLERS, SIDEWALKS, AND PAVEMENT AFFECTED BY THE CONSTRUCTION TO THE SATISFACTION OF THE SITE INSPECTOR.

GRADING

11. MAXIMUM CUT AND FILL SLOPE = 2:1.
12. NO FILL SHALL BE PLACED ON EXISTING GROUND UNTIL THE GROUND HAS BEEN CLEARED OF WEEDS, DEBRIS, TOPSOIL AND OTHER DELETERIOUS MATERIAL. FILLS SHOULD BE PLACED IN THIN LIFTS (8-INCH MAX OR AS RECOMMENDED IN SOILS REPORT), COMPACTED AND TESTED AS GRADING PROCESS UNTIL MASS GRADES ARE ATTAINED. ALL FILLS ON SLOPES STEEPER THAN 5 TO 1 (H/V) AND A HEIGHT GREATER THAN 5 FEET SHALL BE KEYED AND BENCHED INTO FIRM NATURAL SOIL FOR FULL SUPPORT. THE BENCH UNDER THE TOE MUST BE 10 FEET WIDE MIN.
13. NO ROCK OR SIMILAR IRREDUCIBLE MATERIAL WITH A MAXIMUM DIMENSION GREATER THAN 12 INCHES SHALL BE BURIED OR PLACED IN CLOSER THAN 10 FEET TO THE FINISHED GRADE.
14. THE WALLS AND FACES OF ALL EXCAVATIONS GREATER THAN FIVE (5) FEET IN DEPTH SHALL BE GUARDED BY SHORING, SLOPING OF THE GROUND OR OTHER APPROVED MEANS PURSUANT TO THE REQUIREMENTS OF THE DIVISION OF INDUSTRIAL SAFETY OF THE STATE OF CALIFORNIA. TRENCHES LESS THAN FIVE (5) FEET SHALL ALSO BE GUARDED WHEN THE POTENTIAL EXISTS FOR GROUND MOVEMENT.
15. COMPACTED FILL TO SUPPORT ANY STRUCTURES SHALL COMPLY WITH SECTION 31.22.00 PROJECTS WITHOUT PRELIMINARY SOILS REPORT SHALL HAVE DETAILED SPECIFICATIONS SATISFYING THE REQUIREMENTS IN SECTION 31.22.00 PREPARED BY THE EOR.
16. ADEQUATE CONSTRUCTION CONTROL STAKES SHALL BE SET BY THE SURVEYOR TO ENABLE THE CONTRACTOR TO CONSTRUCT THE WORK TO THE PLAN GRADES. THE CONTRACTOR SHALL BE RESPONSIBLE FOR THE PRESERVATION OF BENCHMARKS AND CONSTRUCTION CONTROL STAKING DURING CONSTRUCTION.
17. CARE SHOULD BE TAKEN TO PREVENT GRADES, DITCHES, AND SWALES FROM UNDERMINING EXISTING IMPROVEMENTS.

DRAINAGE AND EROSION/ DUST CONTROL

18. THE CONTRACTOR SHALL PROVIDE AND MAINTAIN AN EFFECTIVE MEANS OF DUST CONTROL, INCLUDING ADEQUATE WATERING, AT ALL TIMES.
19. ALL GRADING OPERATIONS SHALL BE DISCONTINUED WHEN SUSTAINED WIND VELOCITIES EXCEED 25 MILES PER HOUR.
20. THE CONTRACTOR SHALL NOT CAUSE ANY EXCAVATED MATERIAL, MUD, SILT OR DEBRIS TO BE DEPOSITED ONTO PUBLIC OR PRIVATE PROPERTY ADJACENT TO THE RIGHT OF WAY DURING CONSTRUCTION WITHOUT PRIOR WRITTEN APPROVAL.
21. NO OBSTRUCTION OF NATURAL WATER COURSES SHALL BE PERMITTED.
22. DRAINAGE ACROSS THE PROPERTY LINE SHALL NOT EXCEED THAT WHICH EXISTED PRIOR TO GRADING. EXCESS FOR CONCENTRATED DRAINAGE SHALL BE CONTAINED ON SITE OR DIRECTED TO AN APPROVED DRAINAGE FACILITY.
23. ALL EXISTING DRAINAGE COURSES ON THE PROJECT SITE MUST CONTINUE TO FUNCTION. PROTECTIVE MEASURES AND TEMPORARY DRAINAGE PROVISIONS MUST BE USED TO PROTECT ADJOINING PROPERTIES DURING GRADING OPERATIONS.
24. DURING ROUGH GRADING OPERATIONS AND PRIOR TO CONSTRUCTION OF PERMANENT DRAINAGE STRUCTURES, TEMPORARY DRAINAGE CONTROL (BEST MANAGEMENT PRACTICES, BMPS) SHALL BE PROVIDED TO PREVENT PONDING WATER AND DAMAGE TO ADJACENT PROPERTIES.
25. PROVIDE 5' WIDE BY 1' HIGH BERM ALONG THE TOP OF ALL FILL SLOPES STEEPER THAN 3:1.
26. THE GROUND IMMEDIATELY ADJACENT TO THE BUILDING FOUNDATION SHALL BE SLOPED AWAY WITH 2% MIN F OR A MIN DISTANCE OF 10 HORIZONTAL FEET. SWALES WITHIN 10 FEET FROM BUILDING SHALL HAVE 2% MINIMUM SLOPE.

HARDSCAPE

27. ALL EXPOSED CONCRETE SURFACES SHALL CONFORM IN GRADE, COLOR AND FINISH TO MATCH EXISTING CONCRETE, UNLESS OTHERWISE NOTED ON THE CIVIL, ARCHITECTURAL, OR LANDSCAPE ARCHITECT'S PLANS.
28. NO CONCRETE SHALL BE PLACED UNTIL THE FORMS AND REINFORCING STEEL HAVE BEEN PLACED, INSPECTED AND APPROVED.
29. PAVEMENT STRUCTURAL SECTIONS SHOWN ARE MINIMUM AND SUBJECT TO REVISION AND APPROVAL OF THE ENGINEER AS DETERMINED BY SOILS TESTS TAKEN AFTER COMPLETION OF ROUGH GRADING.
30. ACTUAL THICKNESS OF A.C. PAVEMENT AND/OR BASE COURSE MATERIAL FOR STRUCTURAL PAVEMENT SECTIONS SHALL BE RECOMMENDED BY A GEOTECHNICAL REPORT, OTHERWISE THE GEOTECHNICAL ENGINEER WILL CONFIRM THE ON-SITE PAVEMENT SECTIONS BASED ON FIELD MEASURED "R" SUB GRADE VALUES.
31. APPROVED SOIL STERILANT IS REQUIRED UNDER ALL NEW ASPHALT PAVEMENT PRIOR TO PLACEMENT.
32. ALL MANHOLES, CLEANOUT FRAMES, COVERS AND VALVE BOXES SHALL BE RAISED TO FINISHED GRADE BY THE PAVING CONTRACTOR UPON COMPLETION OF PAVING.
33. UPON COMPLETION OF CONSTRUCTION, CONTRACTOR SHALL RESTORE ALL SIGNING, STRIPING, BARRICADES, AND OTHER TRAFFIC CONTROL DEVICES TO THE SATISFACTION OF THE SITE INSPECTOR.

UTILITIES

34. THE EXISTENCE AND APPROXIMATE LOCATIONS OF ANY UNDERGROUND UTILITIES OR STRUCTURES SHOWN ON THESE PLANS WERE OBTAINED BY A SEARCH OF THE AVAILABLE RECORDS.
35. THE CIVIL ENGINEER ASSUMES NO LIABILITY AS TO THE EXACT LOCATION OF SAID LINES NOR FOR UTILITY OR IRRIGATION LINES WHOSE LOCATIONS ARE NOT SHOWN.
36. CONTRACTOR IS TO FIELD VERIFY THE LOCATION AND ELEVATION OF ALL UTILITY CONNECTIONS AND CROSSINGS BY EXPLORATORY POTHOLES PRIOR TO CONSTRUCTION SO THAT ANY NECESSARY ADJUSTMENT CAN BE MADE IN ALIGNMENT AND/OR GRADE OF THE PROPOSED IMPROVEMENT. IT SHALL BE THE RESPONSIBILITY OF THE CONTRACTOR TO ACCOUNT FOR SUCH IN SUBMISSION OF HIS/HER BID AND TO EXERCISE PROPER PRECAUTION TO AVOID DAMAGE THERETO.
37. THE CONTRACTOR SHALL BE RESPONSIBLE FOR NOTIFYING ALL UTILITY AND IRRIGATION COMPANIES PRIOR TO WORK OR EXCAVATION TO DETERMINE THE EXACT LOCATIONS OF ALL LINES AFFECTING THIS WORK, WHETHER OR NOT SHOWN HEREON, AND FOR ANY DAMAGE OR PROTECTION TO THESE LINES.
38. THE CONTRACTOR SHALL CONTACT UNDERGROUND SERVICE ALERT AT 811 TWO WORKING DAYS BEFORE EXCAVATION.
39. REFER TO ELECTRICAL PLANS FOR RELOCATION OF EXISTING PULL BOXES AND OTHER ELECTRICAL OR COMMUNICATION FACILITIES WITHIN THE AREA OF THE NEW BUILDING.
40. REFER TO IRRIGATION PLANS FOR RELOCATION, REMOVAL OR ABANDONMENT OF EXISTING IRRIGATION FACILITIES WITH THE AREA OF THE NEW BUILDING. COORDINATE WITH THE DISTRICT, LANDSCAPE ARCHITECT, AND ARCHITECT FOR ANY CONFLICTS WITH AND RELOCATION OF IRRIGATION LINES RESULTING FROM THE PROPOSED IMPROVEMENTS.
41. NO TRENCH BACKFILL SHALL TAKE PLACE WITHOUT PRIOR APPROVAL OF THE SITE INSPECTOR.
42. A GEOTECHNICAL ENGINEER SHALL CERTIFY ALL BACKFILL COMPACTION. FAILURE TO OBTAIN THE REQUIRED DENSITY SHALL REQUIRE RE-WORKING OF THAT PORTION OF THE WORK UNTIL THE SPECIFIED DENSITY IS OBTAINED
43. NO OPEN TRENCH SHALL BE ALLOWED AT THE END OF THE DAY WITHOUT PRIOR APPROVAL OF THE SITE INSPECTOR.
44. PRIOR TO CONSTRUCTION, THE CONTRACTOR SHALL EXPOSE EXISTING FACILITIES, AND VERIFY ELEVATION AND LOCATION OF CONNECTIONS. DSA APPROVAL OF CONNECTIONS TO EXISTING FACILITIES DOES NOT IMPLY CORRECTNESS OF ELEVATIONS OR LOCATIONS SHOWN ON THE PLANS.
45. ALL UNDERGROUND UTILITIES SHALL BE INSTALLED, TESTED AND APPROVED PRIOR TO PAVING OPERATIONS
46. IF EXISTING UTILITIES OR ANY OTHER FACILITIES CONFLICT WITH THE PROPOSED IMPROVEMENTS, THE CONTRACTOR SHALL NOTIFY THE ENGINEER AND ALL AFFECTED DISCIPLINES IMMEDIATELY.

ABBREVIATIONS

AC	ACRES / ASBESTOS-CEMENT
ADT	AVERAGE DAILY TRAFFIC
APN	ASSESSOR'S PARCEL NUMBER
ASTM	AMERICAN SOCIETY OF TESTING AND MATERIALS
BLDG	BUILDING
BMP	BEST MANAGEMENT PRACTICE
BOT	BOTTOM
C&G	CURB AND GUTTER
C.B.	CATCH BASIN
C.O.	CLEANOUT
CL	CENTERLINE
DG	DECOMPOSED GRANITE
DMA	DRAINAGE MANAGEMENT AREA
DWY	DRIVEWAY
EMRA	ENCROACHMENT MAINTENANCE AND REMOVAL AGREEMENT
ESMT	EASEMENT
EX/EXIST	EXISTING
FF	FINISH FLOOR
FG	FINISH GRADE
FL	FLOWLINE
FS	FINISH SURFACE / FIRE SERVICE
FT	FEET
HDPE	HIGH DENSITY POLY ETHYLENE
HMP	HYDROMODIFICATION MANAGEMENT PLAN
ID	IDENTIFICATION
IE	INVERT ELEVATION
NTS	NOT TO SCALE
NO.	NUMBER
PERF	PERFORATED
PIP	PROTECT IN PLACE
PL	PROPERTY LINE
PM	PARCEL MAP
PROP	PROPOSED
PVC	POLYVINYL CHLORIDE
PVT	PRIVATE
ROW	RIGHT-OF-WAY
RPDA	REDUCED PRESSURE DETECTOR ASSEMBLY
RT	RIGHT
S	SEWER
S/W	SIDEWALK
SD	STORM DRAIN
SF	SQUARE FEET
SHT	SHEET
ST	STREET
TB	THRUST BLOCK
TC	TOP OF CURB
TG	TOP OF GRATE
TW	TOP OF WALL
TYP	TYPICAL
W	WATER
W/	WITH

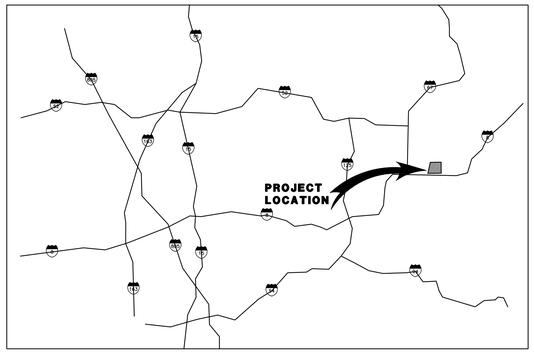

VICINITY MAP
NO SCALE

OWNER

CAJON VALLEY UNION SCHOOL DISTRICT
750 EAST MAIN STREET,
EL CAJON, CA 92020

ENGINEER

RICK
5620 FRIARS ROAD
SAN DIEGO, CA 92110

CONTACT: THOMAS ZANETTI
PHONE: 619-291-0707

ARCHITECT

RUHNAUCLARKE
3775 TENTH STREET
RIVERSIDE, CA 92501

CONTACT:
PHONE: 951-684-4664

SITE ADDRESS

1030 NARANCA AVE,
EL CAJON, CA 92021

GRADING QUANTITIES

GRADED AREA	0 ACRES
CUT QUANTITIES	0 CYD
FILL QUANTITIES	0 CYD
IMPORT	0 CYD

SHEET INDEX

TITLE SHEET	C-01
SITE PLAN	C-02

PRIVATE ENGINEER'S NOTICE TO CONTRACTOR

ALL CONTRACTORS AND SUBCONTRACTORS PERFORMING WORK SHOWN ON OR RELATED TO THESE PLANS SHALL CONDUCT THEIR OPERATIONS SO THAT ALL EMPLOYEES ARE PROVIDED A SAFE PLACE TO WORK AND THE PUBLIC IS PROTECTED. ALL CONTRACTORS AND SUBCONTRACTORS SHALL COMPLY WITH THE "OCCUPATIONAL SAFETY AND HEALTH REGULATIONS" OF THE U.S. DEPARTMENT OF LABOR AND THE STATE OF CALIFORNIA DEPARTMENT OF INDUSTRIAL RELATIONS "CONSTRUCTION SAFETY ORDERS." THE CIVIL ENGINEER SHALL NOT BE RESPONSIBLE IN ANY WAY FOR THE CONTRACTORS AND SUBCONTRACTORS COMPLIANCE WITH SAID REGULATIONS AND ORDERS. CONTRACTOR FURTHER AGREES THAT HE SHALL ASSUME SOLE AND COMPLETE RESPONSIBILITY FOR JOB-SITE CONDITIONS DURING THE COURSE OF CONSTRUCTION OF THIS PROJECT, INCLUDING SAFETY OF ALL PERSONS AND PROPERTY, THAT THIS REQUIREMENT SHALL APPLY CONTINUOUSLY AND NOT BE LIMITED TO NORMAL WORKING HOURS, AND THAT THE CONTRACTOR SHALL DEFEND, INDEMNIFY AND HOLD THE OWNER AND THE CIVIL ENGINEER HARMLESS FROM ANY AND ALL LIABILITY, REAL OR ALLEGED, IN CONNECTION WITH THE PERFORMANCE OF WORK ON THIS PROJECT, EXCEPTING FOR LIABILITY ARISING FROM THE SOLE NEGLIGENCE OF THE OWNER OR ENGINEER.

THE EXISTENCE AND APPROXIMATE LOCATIONS OF ANY UNDERGROUND UTILITIES OR STRUCTURES SHOWN ON THESE PLANS WERE OBTAINED BY A SEARCH OF THE AVAILABLE RECORDS. THE CIVIL ENGINEER ASSUMES NO LIABILITY AS TO THE EXACT LOCATION OF SAID LINES NOR FOR UTILITY OR IRRIGATION LINES WHOSE LOCATIONS ARE NOT SHOWN. THE CONTRACTOR SHALL BE RESPONSIBLE FOR NOTIFYING ALL UTILITY AND IRRIGATION COMPANIES PRIOR TO WORK OR EXCAVATION TO DETERMINE THE EXACT LOCATIONS OF ALL LINES AFFECTING THIS WORK, WHETHER OR NOT SHOWN HEREON, AND FOR ANY DAMAGE OR PROTECTION TO THESE LINES. CONTRACTOR IS TO FIELD VERIFY THE LOCATION AND ELEVATION OF ALL UTILITY CONNECTIONS AND CROSSINGS PRIOR TO CONSTRUCTION SO THAT ANY NECESSARY ADJUSTMENT CAN BE MADE IN ALIGNMENT AND/OR GRADE OF THE PROPOSED IMPROVEMENT.

CONTRACTOR IS RESPONSIBLE FOR SECURING COPIES OF THE STANDARD SPECIFICATIONS AND DESIGN GUIDELINES FROM THE AGENCIES OR MANUFACTURES REFERENCED IN THESE PLANS FOR CORRECT INSTALLATION OF THE PROPOSED INFRASTRUCTURE.

WORK TO BE DONE

THE IMPROVEMENTS CONSIST OF THE FOLLOWING WORK TO BE DONE, ACCORDING TO THESE PLANS PROJECT SPECIFICATIONS, AND THE SPECIFICATIONS AND STANDARD DRAWINGS OF THE CITY OF SAN DIEGO.

STANDARD SPECIFICATIONS:

DOCUMENT NO.	DESCRIPTION
PWPI010119-01	STANDARD SPECIFICATIONS FOR PUBLIC WORKS CONSTRUCTION (GREENBOOK), 2018 EDITION
PWPI010119-02	CITY OF SAN DIEGO STANDARD SPECIFICATIONS FOR PUBLIC WORKS CONSTRUCTION (WHITEBOOK), 2018 EDITION
PWPI010119-04	CITYWIDE COMPUTER AIDED DESIGN AND DRAFTING (CADD) STANDARDS, 2018 EDITION
PWPI060121-10	CALIFORNIA MANUAL OF UNIFORM TRAFFIC CONTROL DEVICES REVISION 6(CA MUTCD REV6), 2014 EDITION
PWPI030119-05	CALIFORNIA DEPARTMENT OF TRANSPORTATION U.S CUSTOMARY STANDARD SPECIFICATIONS, 2018 EDITION

STANDARD DRAWINGS:

DOCUMENT NO.	DESCRIPTION
PWPI010119-03	CITY OF SAN DIEGO STANDARD DRAWINGS FOR PUBLIC WORKS CONSTRUCTION, 2018 EDITION
PWPI030119-06	CALIFORNIA DEPARTMENT OF TRANSPORTATION U.S CUSTOMARY STANDARD PLANS, 2018 EDITION
	CITY OF CHULA VISTA DESIGN AND CONSTRUCTION STANDARD DRAWINGS 2017 EDITION

LEGEND

EXISTING	SYMBOL
EX. RIGHT OF WAY/PROPERTY LINE	
EX. LOT LINE	
EX. CURB AND GUTTER	
EX. WATER MAIN	W
EX. SEWER MAIN	S
EX. STORM DRAIN	SD
EX. STORM DRAIN CLEANOUT/INLET	SD
EASEMENT	
EX. TRANSIT STOP	
EX. STREET SURVEY MONUMENT	
EX. LEAD AND DISK	
EX. 2" IRON PIPE	
EX. SURVEY MONUMENTS	
EX. STREET LIGHT	
EX. UTILITY CLEAN OUT	CO CO
EX. CATCH BASIN	CB CB
EX. BACKFLOW PREVENTER	BP
EX. UTILITY VALVES	GV AV SV
EX. FIRE HYDRANT	
EX. UTILITY METERS	GM WM
EX. UTILITY VAULT	EV GV TV
EX. TRANSFORMER	TX
EX. UTILITY RISER	GR TR
EX. UTILITY PULL BOX	PB TPB E
EX. SIGN	
EX. BOLLARD	
EX. HANDICAP SYMBOL	
PROPOSED	
ASPHALT	
CONCRETE	
GRIND & OVERLAY	
WATER SERVICE	W
SEWER SERVICE	S

STAMPS

LICENSED ARCHITECT — ROGER CLARKE — No. 6-21-2026 — EXP. 10-31-27 — STATE OF CALIFORNIA

IDENTIFICATION STAMP
DIV. OF THE STATE ARCHITECT
APP: 04-125522 INC:
REVIEWED FOR
SS ☑ FLS ☑ ACS ☑
DATE: 08/19/2026

REGISTERED ENGINEER — THOMAS ZANETTI — No. C 72631 — CIVIL — STATE OF CALIFORNIA

CONSULTANT BRANDING

RICK
5620 FRIARS ROAD
SAN DIEGO, CA 92110
619-291-0707
rickengineering.com
SAN DIEGO · ORANGE · RIVERSIDE · SACRAMENTO · SAN LUIS OBISPO · SANTA CLARITA · PHOENIX · TUCSON · LAS VEGAS · DENVER

\\ca-rickeng.com\projects\C20500\20586_NaranciaES_PortableBldg\Civil\PlanSets\20586-C-TITLE-01.dwg

Plotted: 8/13/2026 Time to process: 0.00 Plot Scale: 1.000 Plot Offset: 0.00

PROJECT No. : 1-16-21
8/13/2026
J-20586

DRAWN BY:RICK CHECKED BY:RCA
DELTA # ____ DATE ____ ☐ADD ☐AFO ☐CCD ☐REV
DELTA # ____ DATE ____ ☐ADD ☐AFO ☐CCD ☐REV
DELTA # ____ DATE ____ ☐ADD ☐AFO ☐CCD ☐REV
DELTA # ____ DATE ____ ☐ADD ☐AFO ☐CCD ☐REV

RUHNAUCLARKE.COM
3775 TENTH STREET, RIVERSIDE CALIFORNIA 92501 (951) 684 4664 / 5751 PALMER WAY, SUITE C, CARLSBAD CALIFORNIA 92010 (760) 438 5899 / 801 16TH STREET, SACRAMENTO, CA 95814 (916) 379-8111

NARANCA ELEMENTARY SCHOOL
RELOCATABLE CLASSROOM BUILDINGS
NARANCA ELEMENTARY SCHOOL
1030 NARANCA AVE, EL CAJON, CA 92021
CAJON VALLEY UNION SCHOOL DISTRICT

TITLE SHEET

C-01

J-20538

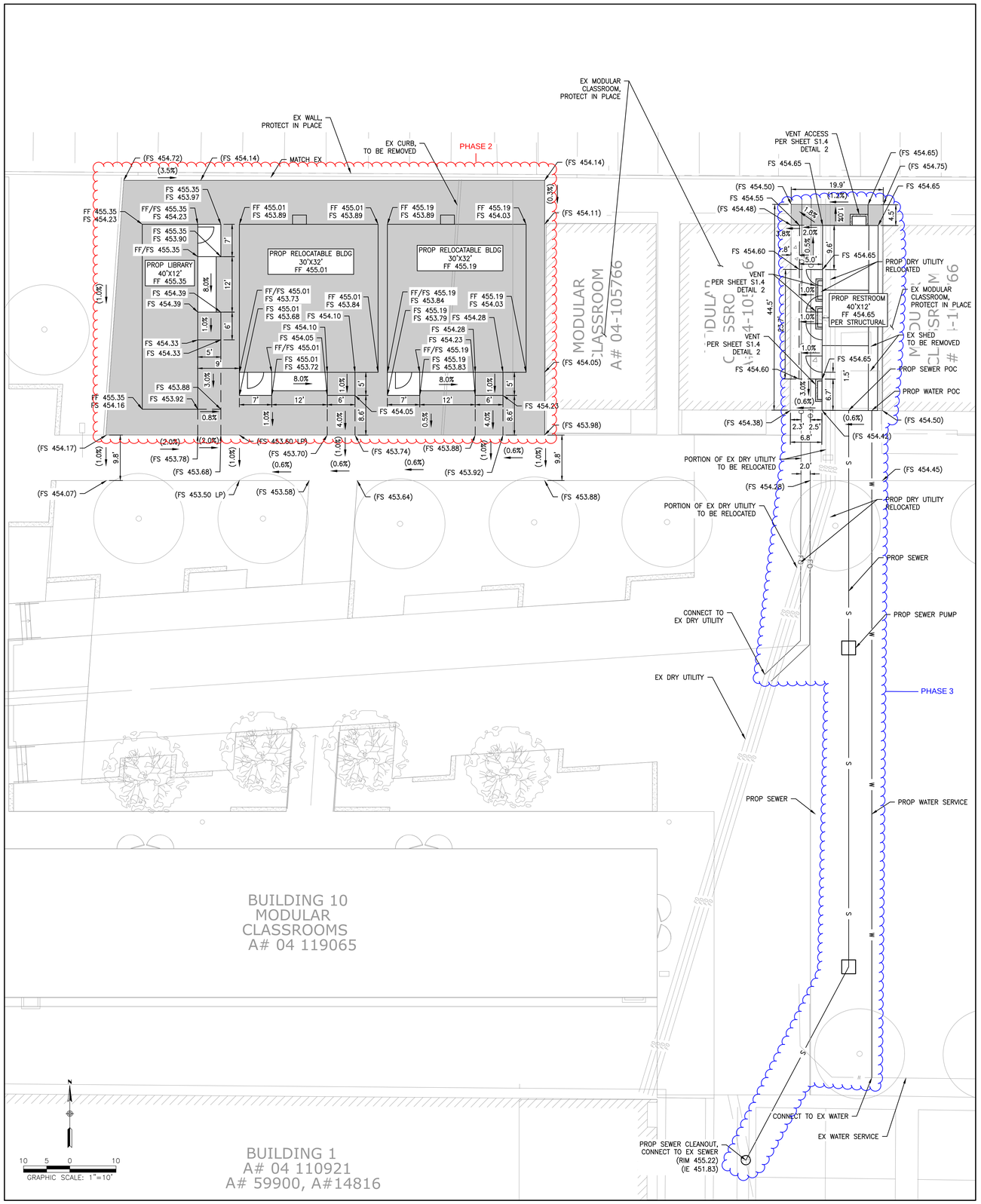

LEGEND:

- PROP WTR
- PROP SWR
- PROP CONCRETE
- PROP ASPHALT
- PROP GRIND AND OVERLAY

NOTES:

1. UTILITY LOCATION AND INVERTS TO BE VERIFIED IN FIELD

PHASE 2 AND /OR PHASE 3

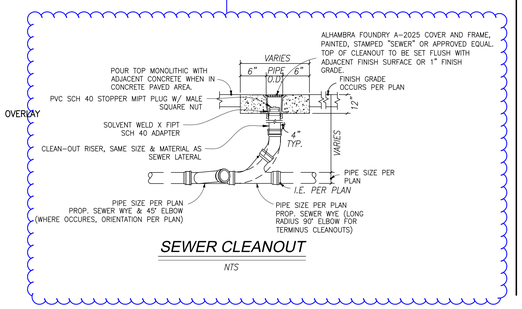

SEWER CLEANOUT

NTS

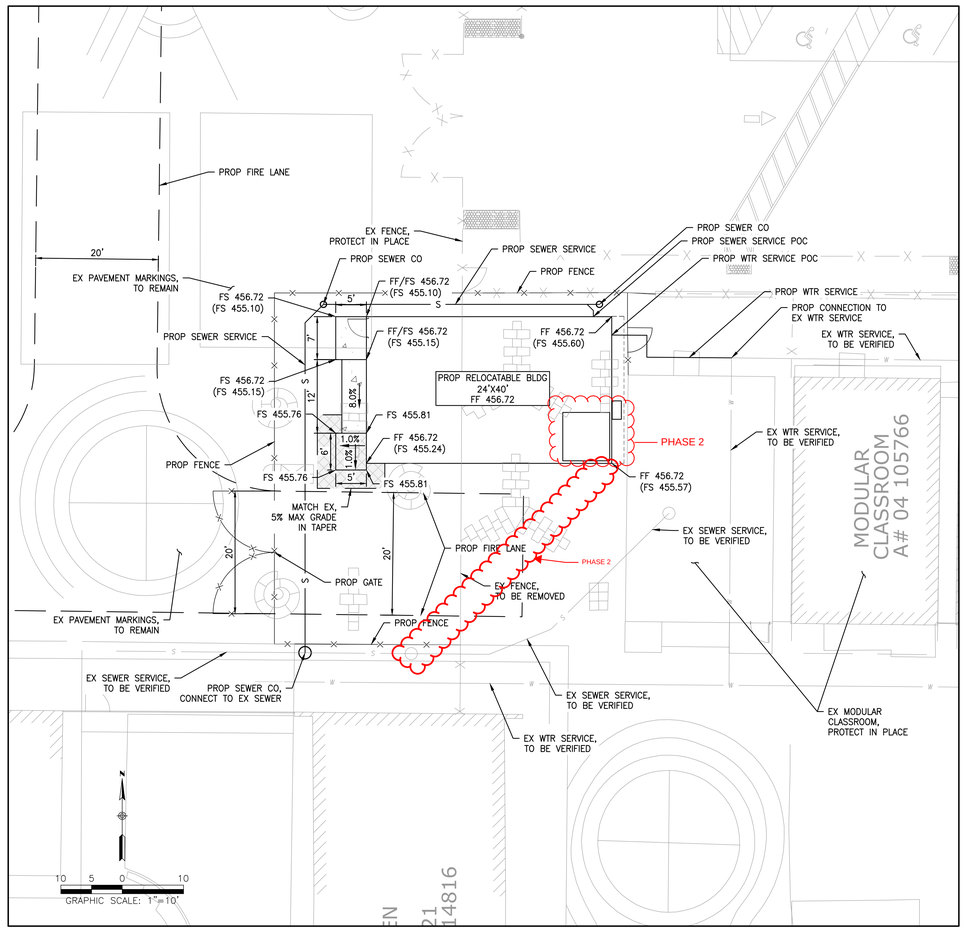

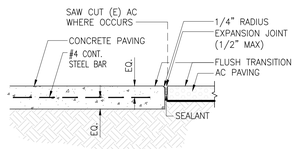

CONC. EDGE @ PAVING

NTS

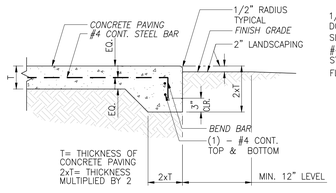

CONC. EDGE @ PLANTING

NTS

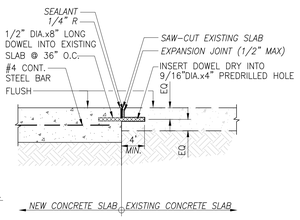

EXISTING CONC. JOIN

NTS

STAMPS

LICENSED ARCHITECT — REGISTER EXPIRES 12-31-2027 — LAR 10-31-27 — STATE OF CALIFORNIA

IDENTIFICATION STAMP
DIV. OF THE STATE ARCHITECT
APP: 04-125522 INC:
REVIEWED FOR
SS ☑ FLS ☑ ACS ☑
DATE: 08/19/2026

CONSULTANT BRANDING

REGISTERED ENGINEER — THOMAS ZINETTI — No. C 72631 — CIVIL — STATE OF CALIFORNIA

RICK
5620 FRIARS ROAD
SAN DIEGO, CA 92110
619-291-0707
rickengineering.com
SAN DIEGO ORANGE RIVERSIDE SACRAMENTO SAN LUIS OBISPO SANTA CLARITA PHOENIX TUCSON LAS VEGAS DENVER

\\cgi-rickeng.com\projects\C20500\20586_NaranciaES_Portable&RR\Civil\PlanSets\20586-C-GR0-02.dwg

PROJECT No. : 1-16-21
8/17/2026
J-20586

DRAWN BY:RICK CHECKED BY:RCA
DELTA # ____ DATE ____ ☐ADD ☐AFD ☐CCD ☐REV
DELTA # ____ DATE ____ ☐ADD ☐AFD ☐CCD ☐REV
DELTA # ____ DATE ____ ☐ADD ☐AFD ☐CCD ☐REV
DELTA # ____ DATE ____ ☐ADD ☐AFD ☐CCD ☐REV

RUHNAUCLARKE.COM
3775 TENTH STREET, RIVERSIDE CALIFORNIA 92501 (951) 684 4664 / 5751 PALMER WAY, SUITE C, CARLSBAD CALIFORNIA 92010 (760) 438 5899 / 801 16TH STREET, SACRAMENTO, CA 95814 (916) 379-8111

NARANCA ELEMENTARY SCHOOL
RELOCATABLE CLASSROOM BUILDINGS
NARANCA ELEMENTARY SCHOOL
1030 NARANCA AVE, EL CAJON, CA 92021
CAJON VALLEY UNION SCHOOL DISTRICT

SITE PLAN

C-02

J-20538

QUALIFYING OPEN SPACE NEEDS TO BE ACCEISBLE FROM A FIRE LANE (150'-0" MAX DISTANCE PER CFC 503.1.1.

$L_F = \left(\frac{\text{FRONTAGE}}{\text{TOTAL PERIMITER}} \times 100\right)$ $L_F = 25{-}50$

$L_F = \left(\frac{333}{760} \times 100\right) = 43.82$ $L_F = 0.25$

$A_o = [A_i + (NS \times L_i)]$

$A_o = [9500 + (9500 \times 0.25)]$

$A_o = 11{,}875$ SQ.FT.

$\mathbf{A_o\ (11{,}875) \geq FA_i\ (11{,}040)}$

STOCKPILE CLASSROOM BUILDINGS 27B-27D, 12-20 A#02-124191

BUILDING CODE ANALYSIS

BUILDING NAME	OCCUPANCY TYPE	CONSTRUCTION TYPE	FIRE PROTECTION SYSTEMS: FIRE SPRINKLERS	FIRE PROTECTION SYSTEMS: FIRE ALARM	HEIGHT: MAX ALLOWED TABLE 504.4 (NO INCREASE)	HEIGHT: ACTUAL	STORIES ABOVE GRADE: MAX ALLOWED TABLE 504.3 (NO INCREASE)	STORIES ABOVE GRADE: ACTUAL	BUILDING AREA (SF): MAX ALLOWED TABLE 506.2 (NO INCREASE)	BUILDING AREA (SF): ACTUAL BUILDING AREA	OCCUPANCY LOAD: OCC	OCCUPANCY LOAD: SDA (ACC)	OCCUPANCY LOAD: SDA	OCCUPANCY LOAD: TOTAL SDA	COMMENTS
STOCKPILE CLASSROOM BUILDINGS 27B-27D, 20, 19 A#02-124191,RESTROOM BUILDING RR A#02-124199	E	V-B	NO	YES	40'	12'-0"	1	1	9,500 SF	11,040 SF	11,040 SF / 20 = 552	2% X 552 = 11 / 11 X 10sf = 110 sf	3 SF X (552-11) = 1,623 sf	= 2,790 SF REQ. 1,652 sf +110 sf + 987 sf + 70 sf+(E) 10000 = 12,748 SF PROVIDED	
STOCKPILE CLASSROOM BUILDING 21-26, 44 A#02-124190	E	V-B	NO	YES	40'	12'-0"	1	1	9,500 SF	6,720 SF	6720 SF / 20 = 336	2% X 336 =2 / 7 X 10sf =70 sf	3 SF X (336-7) = 987sf		

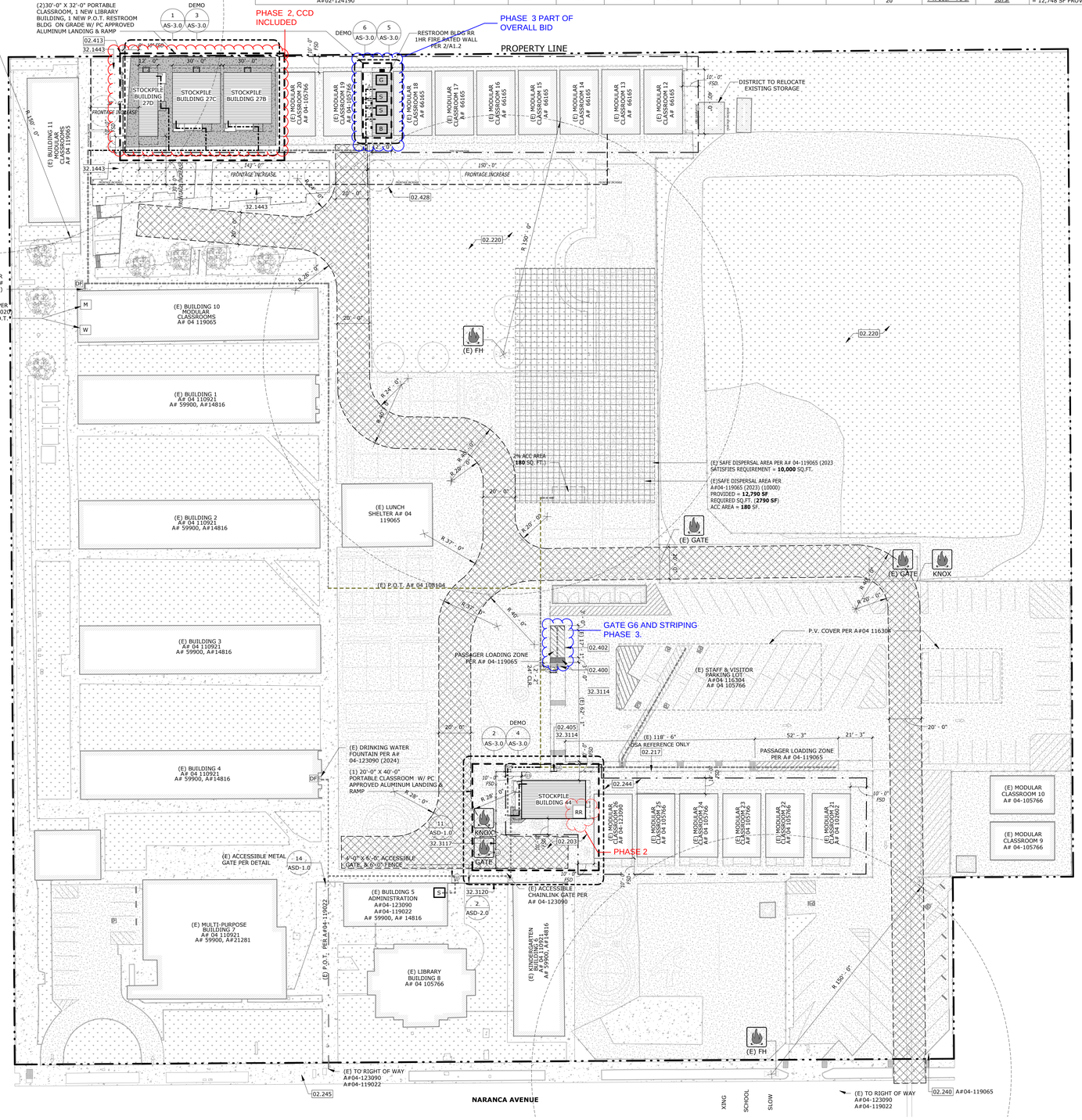

OVERALL SITE PLAN | SCALE: 1" = 30'-0" | 1

FIRE LEGEND

ASSUMED PROPERTY LINE

(E) FIRE LANE A# 04-119065 — INDICATES 20'-0" MIN. WIDE DRIVES, FIRE TRUCK ACCESS LANE WITH NOT LESS THAN 13'-6" VERTICAL CLEARANCE PER CFC 2025 EDITION. CONTRACTOR TO PROVIDE ALL REQUIRED PAINTING OF CURBS AND PROVIDE ALL SIGNAGE PER SAN BERNARDINO FIRE AUTHORITY REQUIREMENTS.

MINIMUM TURNING RADIUS FOR FIRE TRUCK ACCESS

(E) FH — EXISTING FIRE HYDRANT

(E) KNOX — EXISTING KNOX PADLOCK FOR ENTRYKEY (MINIMUM KNOX BOX 3200 SERIES MODEL)

(E) GATE — EXISTING 20'-0" MIN. WIDE FIRE TRUCK ACCESS GATES.

PHASE 2

GATE SCHEDULE

GATE NO	TYPE	GATE SIZES: WIDTH	GATE SIZES: HEIGHT	MATERIAL	FINISH	HDWR GROUP	DETAIL	PANIC	NOTES
G1	PR (10' X 8')	20' - 0"	6' - 0"	CL	GALV	HW-3	16/ASD-1.0	-	1,8
G2	SINGLE	4' - 0"	6' - 0"	MLT	PAINTED	HW-2	6/ASD-2.0	P.H.	3,4,5,6,7
G3	SINGLE	3' - 0"	6' - 0"	CL	GALV	HW-3	15/ASD-2.0	-	2,7,8
G4	SINGLE	4' - 0"	6' - 0"	CL	GALV	HW-1	13/ASD-1.0	P.H.	3,4,5,6,7
G5	SINGLE	4' - 0"	6' - 0"	CL	GALV	HW-1	13/ASD-1.0	P.H.	3,4,5,6,7
G6	SINGLE	4' - 0"	6' - 0"	CL	GALV	HW-1	13/ASD-1.0	P.H.	3,4,5,6,7

NOTES:

1. KNOX BOX PER LOCAL FIRE DEPARTMENT REQUIREMENTS.
2. PADLOCK AS PART OF HARDWARE SET.
3. NO PADLOCKS ON EXIT GATES IN THE PATH OF EGRESS GATES SHALL HAVE 5 LBS. MAX. OPERATING PRESSURE.
4. CLOSING SPEED:90 DEGRESS TO 12 DEGRESS IN 5 SECS.
5. PROVIDE KICK PLATES
6. PROVIDE PANIC HARDWARE
7. GATE HEIGHT TO MATCH ADJACENT FENCE HEIGHT
8. SERVICE GATE

GATE SCHEDULES ABBREVIATIONS:

P.H. PANIC HARDWARE
CL CHAIN LINK
MTL METAL ORNAMENTAL STEEL
PTD PAINTED
GALV GALVANIZED
PR PAIR OF GATES

G1 — GATE IDENTIFICATION NUMBER SEE SCHEDULE.

GATE HARDWARE:

HW-1: EACH GATE TO HAVE

3	EA	SELF CLOSING HINGE	MAMMOTH -180	689	LOX
1	EA	PANIC HARDWARE	CDSI-PA-AX-98-L-NL-06-WH	US32D	VON
1	EA	RIM CYLINDER	20-057 ICX	626	SCH
1	EA	MORTISE CYLINDER	20-061 ICX XQ11-948 36-083	626	SCH
2	EA	FSIC CORE	23-030 EV D	626	SCH
2	EA	KICK PLATE	8400 10" X 2" LDW B-CS	US32D	IVE
1	EA	FLOOR STOP	FS18L	BLK	IVE

HW-2: EACH GATE TO HAVE

3	EA	HINGE	MAMMOTH -180	652	IVE
1	EA	PANIC HARDWARE	CDSI-PA-AX-98-L-NL-06-WH	US32D	VON
1	EA	RIM CYLINDER	20-057 ICX	626	SCH
1	EA	MORTISE CYLINDER	20-061 ICX XQ11-948 36-083	626	SCH
2	EA	FSIC CORE	23-030 EV D	626	SCH
1	EA	FLOOR STOP	FS18S	BLK	IVE
3	EA	SILENCER	SR64	GRY	IVE

HW-3: EACH GATE TO HAVE

1	EA	PADLOCK	41B72	606	BES
1	EA	PERMANENT CORE	1C-7	606	BES

NOTE: BALANCE OF MATERIAL PROVIDED BY GATE MANUFACTURER

DSA 810

FIRE & LIFE SAFETY SITE CONDITIONS SUBMITTAL

Division of the State Architect (DSA) documents referenced within this publication are available on the DSA Forms or DSA Publications webpages.

To facilitate the Division of the State Architect's (DSA) fire and life safety plan review of project site conditions, DSA requires the design professional to provide the following information at time of project submittal for projects consisting of construction of a *new* campus, construction of new building(s), additions to existing buildings, and for site alternate design means for fire department emergency vehicle access, and fire suppression water supply.

Information associated with compliance items 1 through 3 below is to be provided for all project types indicated above. Information associated with items 4 through 7 is to be completed when an alternate means is utilized. Acknowledgement by the school district and signature from the Local Fire Authority (LFA) is only required when an alternate design means is being requested.

The Project Information and Fire & Life Safety Information sections are to be completed for all projects and imaged onto the fire access site plan. When an alternate design/means is proposed, all sections on pages 1 and 2 are to be completed and imaged on the fire access site plan.

For additional information refer to the instructions at the end of this form and DSA Policy *PL 09-01: Fire Flow for Buildings*.

PROJECT INFORMATION	
School District/Owner:	Cajon Valley Union School District
Project Name/School:	Naranca Elementary School
Project Address:	1030 Naranca Ave, El Cajon, CA 92021

FIRE & LIFE SAFETY INFORMATION				
1.	Has a fire hydrant flow test been performed within the past 12 months? *(If yes, provide a copy of the test data.)*	Yes ☑		No ☐
2.	Was the fire hydrant water flow test performed at the request of this LFA review?	Yes ☐		No ☑
3.	Is the project located within a designated fire hazard severity zone (FHSZ) as established by Cal-Fire? *(If yes, indicate FHSZ classification below.)*	Yes ☐		No ☑
	Refer to the following website for FHSZ locations: http://egis.fire.ca.gov/FHSZ/	Moderate ☐	High ☐	Very High ☐
	Wildland Interface Area (WIFA) *(If any designations are checked, project design must meet the requirements of CBC Chapter 7A.)*			WIFA ☐

DGS DSA 810 (revised 12/29/20) DIVISION OF THE STATE ARCHITECT — DEPARTMENT OF GENERAL SERVICES — Page 1 of 4 STATE OF CALIFORNIA

(E) PARKING SUMMARY

PARKING LOT	TOTAL PARKING SPACES	STANDARD PARKING SPACES	REQ'D ACCESSIBLE	PROVIDED ACCESSIBLE	REQ'D VAN ACCESSIBLE	PROVIDED VAN ACCESSIBLE
EXISTING PARKING LOT 'A' VISITOR & STAFF	70	66	3	4 (2 STD. + 2 VAN)	1	2

STAMPS

IDENTIFICATION STAMP
DIV. OF THE STATE ARCHITECT
APP: 04-125522 INC:
REVIEWED FOR
SS ☑ FLS ☑ ACS ☑
DATE: 08/19/2026

CONSULTANT BRANDING

RUHNAU CLARKE ARCHITECTS

GENERAL NOTES

1. VERIFY ALL DIMENSIONS PRIOR TO CONSTRUCTION.
2. ARCHITECT SHALL VERIFY TACTILE SIGNS FOR PUSH AND PULL SIDE OF ALL EXISTING DOORS ON THE P.O.T. ROUTE TO BE COMPLIANT WITH CURRENT CODE PER DETAIL, 4/AD-1.2 & 5/AD-1.2.
3. ALL DOORS AND GATES ON THE P.O.T. SHALL BE TESTED AND ADJUSTED TO MEET SECTION 11B-404.2.8 FOR CLOSING SPEED & 11B-404.2.9 FOR DOOR AND GATE OPENING FORCE.
4. CONTRACTOR TO ADJUST AS REQUIRED FOR DOOR CLOSER TO HAVE AN OPEN POSITION OF 90 DEGREES, THE TIME REQUIRED TO MOVE A DOOR FROM THE LATCH TO A POSITION OF 12 DEGREES TO BE 5 SECONDS MINIMUM, AND TO HAVE A 5 LBS. MAXIMUM OPERATING PRESSURE.
5. OPENINGS IN GRATINGS OR STRAINERS LOCATED IN PEDESTRIAN CIRCULATION PATHS OR IN PATH OF TRAVEL **SHALL NOT ALLOW PASSAGE OF A SPHERE MORE THAN 1/2 INCH DIAMETER**. ELONGATED OPENINGS SHALL BE PLACED SO THAT LONG DIMENSION IS PERPENDICULAR TO THE DOMINANT DIRECTION OF TRAVEL IN COMPLIANCE WITH SECTION 11B-302.3. WHERE NO DOMINANT DIRECTION OF TRAVEL IS DEFINED, **1/2" MAX OPENINGS IN ALL DIRECTIONS** IS REQUIRED.

KEYNOTES

02.203	EXISTING ASPHALT PAVING TO REMAIN, PROTECT IN-PLACE
02.217	EXISTING CHAINLINK FENCE TO REMAIN.
02.220	EXISTING LANDSCAPE AND TREES TO REMAIN, PROTECT IN-PLACE.
02.240	EXISTING UNAUTHORIZED TOW AWAY SIGN TO REMAIN, PROTECT IN PLACE
02.244	EXISTING MAINTENANCE AREA, FOR MAINTENANCE USE ONLY
02.245	EXISTING PEDESTRIAN WALK WAY TO REMAIN, PROTECT IN PLACE
02.400	EXISTING DETECTABLE WARNING (TRUNCATED DOMES) SURFACING TO BE DEMOED TO ITS ENTIRETY, PATCH AND REPAIR SURFACE TO MATCH EXISTING, RELOCATE TO NEW LOCATION PER PLAN.
02.402	EXISTING ACCESSIBLE LOADING AND UNLOADING SIGN AND POST TO BE REMOVED. PATCH AND REPAIR SURFACE TO MATCH EXISTING, SIGN TO BE PLACED AT ADJUSCENT FENCE
02.405	EXISTING ACCESSIBLE PEDESTRIAN CHAINLINK GATE AND POST ALONG P.O.T. TO BE DEMOED, PATCH AND REPAIR SURFACE TO MATCH EXISTING
02.413	DEMOLISH, EXISTING AREA TO BE CLEANED UP. REMOVE ALL LOOSE ITEMS INCLUDING BUT NOT LIMTED TO GARDEN ARBORS, LUNCH TABLES, BENCHES, WOODEN PALLETS, ETC. PREP AREA TO RECEIVE NEW ASPHALT PAVING PER CIVIL DRAWINGS
02.428	DEMO EXISITNG TREE
32.1443	(E) LANDSCAPE TO BE RESEEDED AND INFILLED WHERE NECESSARY PER DISTRICT DIRECTION
32.1733	(N) BLUE BORDER, FULLY ENCLOSED AT ACCESSIBLE ROUTE WITH (N) INTERIOR WHITE DIAGONAL STRIPING [RE-PAINT (E) WHERE OCCURS]
32.3114	NEW PEDESTRIAN SINGLE LEAF CHAINLINK GATE PER SCHEDULE
32.3117	NEW 6'- 0" CHAIN LINK FENCE
32.3120	NEW DECORATIVE METAL FENCE

LEGEND

- WORK AREA BOUNDARY
- (E) BUILDING TO REMAIN
- (E) ASPHALT PAVING, TO REMAIN, PROTECT IN PLACE
- (E) CONCRETE PAVING, TO REMAIN, PROTECT IN PLACE
- (E) LANDSCAPE TO REMAIN, PROTECT IN PLACE
- (N) ASPHALT PAVING, FOR ADDITIONAL INFORMATION, SEE CIVIL DRAWINGS. (3 / ASD-1.0)
- (N) RELO BUILDINGS
- (N) CONVRETE PER CIVIL DRAWINGS
- (N) LANDSCAPE
- EXISTING WALK OVERHEAD LINE ABOVE.
- EXISTING FENCE TO REMAIN, PROTECT IN PLACE.
- (N) CHAINLINK FENCE
- EXISTING ORNAMENTAL FENCE TO REMAIN
- ORNAMENTAL FENCE TO REMAIN
- SITE PROPERTY LINE
- ASSUMED PROPERTY LINE
- GATE NUMBER, SEE GATE SCHEDULE
- (E) TREE TO REMAIN
- (E) DRINKING FOUNTAIN TO REMAIN

P.O.T. NOTES

- (E) PATH OF TRAVEL PER (A# 04-62451) ON EXISTING COMPLIANT WALKWAY
- (E) PATH OF TRAVEL PER (A# 04-108104) ON EXISTING COMPLIANT WALKWAY
- (E) PATH OF TRAVEL PER (A# 04-119022) ON EXISTING COMPLIANT WALKWAY
- (E) PATH OF TRAVEL PER (A# 04-119065) ON EXISTING COMPLIANT WALKWAY
- (E) PATH OF TRAVEL PER (A# 04-123090) ON EXISTING COMPLIANT WALKWAY
- NEW PATH OF TRAVEL

DESIGN PROFESSIONAL IN GENERAL RESPONSIBLE CHARGE STATEMENT

Design Professional in General Responsible Charge Statement: The path of travel (POT) identified in these construction documents meets the requirements of the current edition of the California Building Code (CBC) accessibility provisions for path of travel requirements for alterations, additions and structural repairs. As part of the design of this project, the POT was examined and any elements, components or portions of the POT that were determined to be noncompliant with the CBC have been identified and the corrective work necessary to bring them into compliance has been included within the scope of this project's work through details, drawings and specifications incorporated into these construction documents. Any noncompliant elements, components or portions of the POT that will not be corrected by this project based on valuation threshold limitations or a finding of unreasonable hardship are indicated in these construction documents.

During construction, if POT items within the scope of the project represented as CBC compliant are found to be nonconforming beyond conventional industry tolerances, the items shall be brought into compliance with the CBC as a part of this project by means of a Construction Change Document."

Path of Travel, Technical Requirements for Accessible Route

"Accessible Path of travel as indicated on plan is a barrier-free access route without abrupt level changes exceeding ½" if beveled at 1:2 maximum slope or vertical level changes not exceeding ¼" maximum and at least 48" in width. Surface is stable, firm, and slip-resistant. Cross-slope shall not be steeper than 1:48 and slope in the direction of travel shall not be steeper than 1:20. Accessible path of travel shall be maintained free of overhanging obstructions to 80" minimum and free of objects protruding more than 4" from the wall, above 27" and less than 80" above the floor. Architect shall verify that there are no barriers in the path of travel."

DF — (E) DRINKING FOUNTAIN, PER A# 04-123090, SHALL BE ADJUSTED WHERE NECESSARY ALONG P.O.T. TO MEET THE REQUIREMENTS BELOW

The spout shall provide a flow of water 4 inches (102 mm) high minimum and shall be located 5 inches (127 mm) maximum from the front of the unit. The angle of the water stream shall be measured horizontally relative to the front face of the unit. Where spouts are located less than 3 inches (76 mm) of the front of the unit, the angle of the water stream shall be 30 degrees maximum. Where spouts are located between 3 inches (76 mm) and 5 inches (127 mm) maximum from the front of the unit, the angle of the water stream shall be 15 degrees maximum.

- (E) SAFE DISPERSAL AREA PER A# 04-119065
- S — (E) UNISEX STAFF RESTROOM, PER, A# 04-123090 (AGE ADULTS)
- RR — NEW ACCESSIBLE RESTROOMS (AGE 9-12)
- GIRLS / STAFF / BOYS — NEW ACCESSIBLE RESTROOMS (AGE 9-12)

NARANCA ES RELOCATABLE CLASSROOM BUILDINGS:

PROJECT No. :1-16-21
8/17/2026 5:17:40 PM

DRAWN BY: CHECKED BY:
DELTA # ____ DATE ____ ADD AFO CCD REV
DELTA # ____ DATE ____ ADD AFO CCD REV
DELTA # ____ DATE ____ ADD AFO CCD REV
DELTA # ____ DATE ____ ADD AFO CCD REV

RUHNAUCLARKE.COM

3775 TENTH STREET, RIVERSIDE CALIFORNIA 92501 (951) 684 4664 / 5751 PALMER WAY, SUITE C, CARLSBAD CALIFORNIA 92010 (760) 438 5899

NARANCA ES RELOCATABLE CLASSROOM BUILDINGS
NARANCA ELEMENTARY SCHOOL
1030 NARANCA AVE, EL CAJON, CA 92021
CAJON VALLEY UNION SCHOOL DISTRICT

OVERALL SITE PLAN | **AS-2.0**

1-16-21

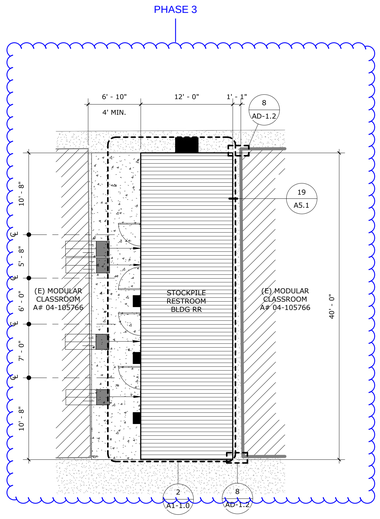

NOTE:
FOR MORE INFORMATION, REFER TO CIVIL DRAWINGS - /C-02

ENLARGED SITE PLAN (RR) SCALE: 1/8" = 1'-0" 5

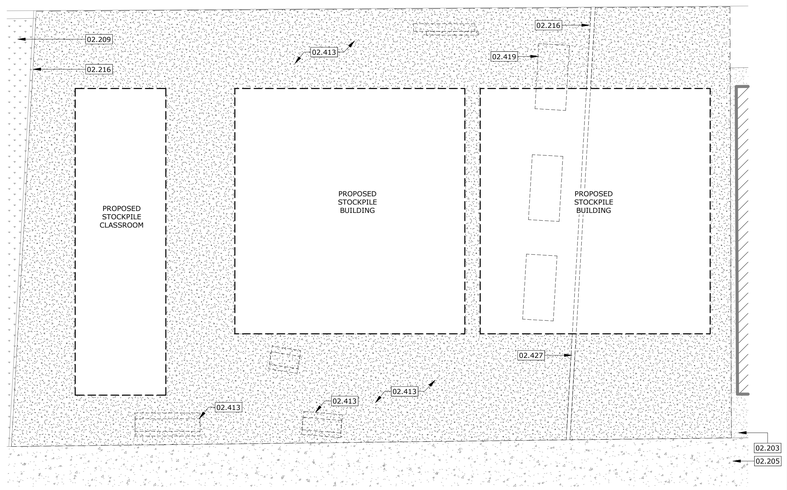

DEMO ENLARGED SITE PLAN (30X32) SCALE: 1/8" = 1'-0" 3

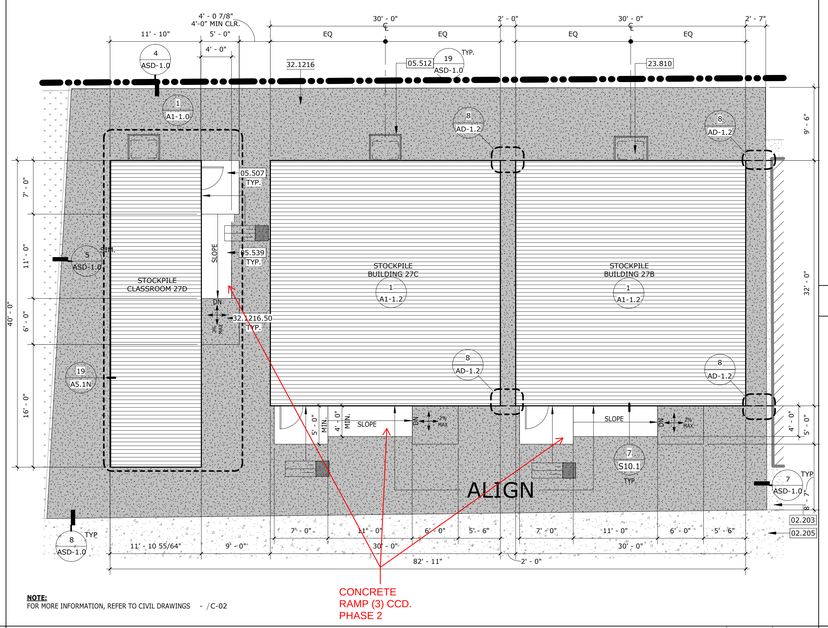

NOTE:
FOR MORE INFORMATION, REFER TO CIVIL DRAWINGS - /C-02

ENLARGED SITE PLAN (30X32) SCALE: 1/8" = 1'-0" 1

AGENCY APPROVAL
File No: ######A:/04-125522

IDENTIFICATION STAMP
DIV. OF THE STATE ARCHITECT
APP: 04-125522 INC:
REVIEWED FOR
SS ☑ FLS ☑ ACS ☑
DATE: 08/19/2026

STAMPS

RUHNAU CLARKE ARCHITECTS

CONSULTANT BRANDING

GENERAL NOTES

1. VERIFY ALL DIMENSIONS PRIOR TO CONSTRUCTION.
2. CONTRACTOR TO ADJUST AS REQUIRED FOR DOOR CLOSER TO HAVE AN OPEN POSITION OF 90 DEGREES, THE TIME REQUIRED TO MOVE A DOOR FROM THE LATCH TO A POSITION OF 12 DEGREES TO BE 5 SECONDS MINIMUM, AND TO HAVE A 5 LBS. MAXIMUM OPERATING PRESSURE.
3. ARCHITECT SHALL VERIFY TACTILE SIGNS FOR PUSH AND PULL SIDE OF ALL EXISTING DOORS ON THE P.O.T. ROUTE TO BE COMPLIANT WITH CURRENT CODE PER DETAIL, 4/AD-1.2 & 5/AD-1.2.
4. ALL DOORS AND GATES ON THE P.O.T. SHALL BE TESTED AND ADJUSTED TO MEET SECTION 11B-404.2.8 FOR CLOSING SPEED & 11B-404.2.9 FOR DOOR AND GATE OPENING FORCE.
5. THE TOTAL NUMBER OF OCCUPANTS REMAINS THE SAME. THE STOCKPILE STRUCTURES SHALL ACCOMMODATE THE SAME NUMBER OF OCCUPANTS THAT WILL BE RELOCATED FROM EXITING RELO STRUCTURES.

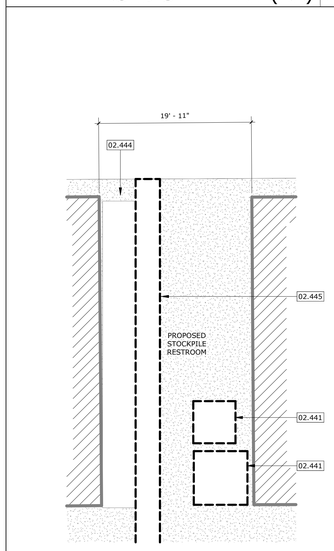

(D) ENLARGED SITE PLAN (RR) SCALE: 1/8" = 1'-0" 6

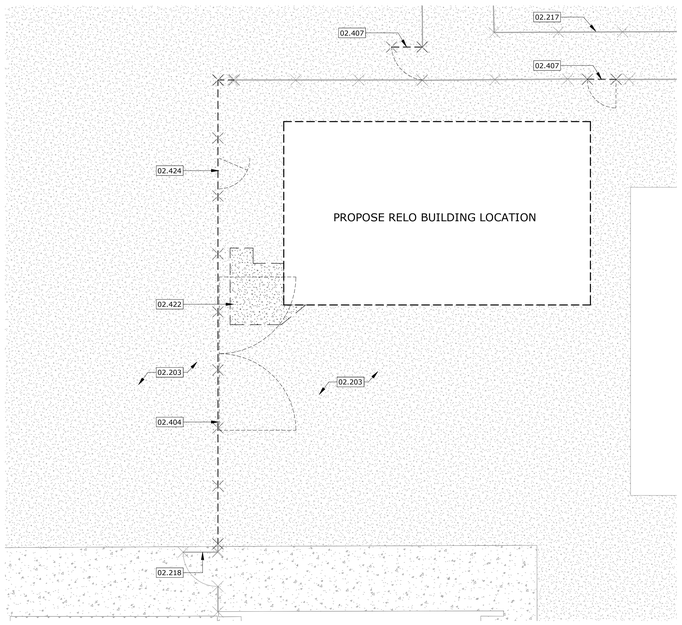

DEMO ENLARGED SITE PLAN SCALE: 1/8" = 1'-0" 4

NOTE:
FOR MORE INFORMATION, REFER TO CIVIL DRAWINGS - /C-02

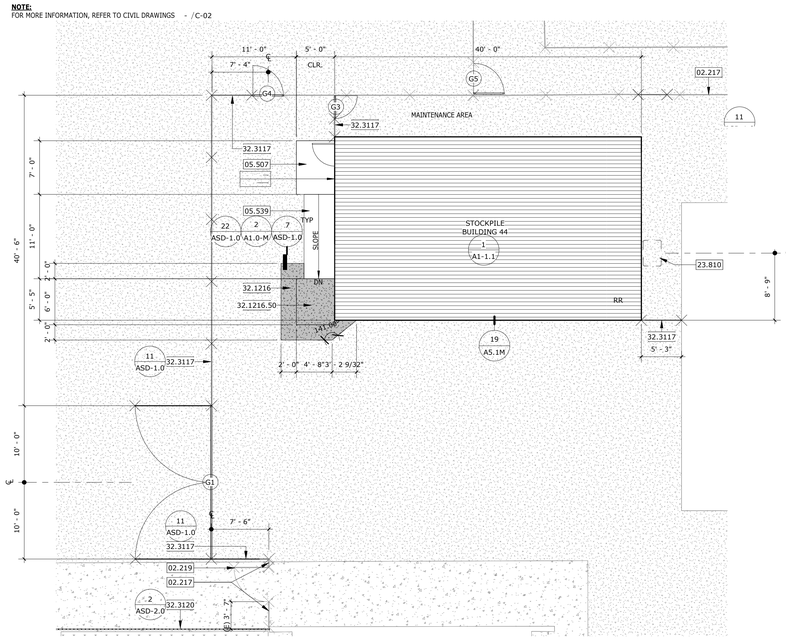

ENLARGED SITE PLAN RELO SCALE: 1/8" = 1'-0" 2

KEYNOTES

02.203	EXISTING ASPHALT PAVING TO REMAIN, PROTECT IN-PLACE
02.205	EXISTING CONCRETE PAVING TO REMAIN, PROTECT IN-PLACE
02.209	EXISTING LANDSCAPING TO REMAIN, PREP AREA FOR RESEEDING AND MATCH EXISTING.PROTECT TREES IN-PLACE.
02.216	EXISTING CONCRETE CURB TO REMAIN.
02.217	EXISTING CHAINLINK FENCE TO REMAIN.
02.218	EXISTING CHAINLINK GATE TO REMAIN, PROTECT IN-PLACE.
02.219	EXISTING PEDESTRIAN CHAINLINK GATE TO REMAIN, PROTECT IN PLACE.
02.404	EXISTING CHAINLINK VEHICULAR ACCESS GATE TO BE DEMOED TO ITS ENTIRETY, PATCH AND REPAIR SURFACE TO MATCH EXISTING
02.407	EXISTING CHAINLINK GATE TO BE DEMOED TO ITS ENTIRETY, PATCH AND REPAIR SURFACE TO MATCH EXISTING
02.413	DEMOLISH, EXISTING AREA TO BE CLEANED UP. REMOVE ALL LOOSE ITEMS INCLUDING BUT NOT LIMTED TO GARDEN ARBORS, LUNCH TABLES, BENCHES, WOODEN PALLETS, ETC. PREP AREA TO RECEIVE NEW ASPHALT PAVING PER CIVIL DRAWINGS
02.419	EXISTING GARDEN PLANTERS TO BE DEMOED TO ITS ENTIRETY, PREP AREA FOR NEW WORK PER CIVIL DRAWINGS.
02.422	LIMIT OF EXISTING ASPHALT PAVING TO BE SAWCUT AND REMOVE
02.424	EXISITNG CHAINLINK FENCE AND GATE TO BE REMOVED.
02.427	DEMO CONCRETE CURB
02.441	RELOCATTE EXISTING STORAGE CONTAINER, LOCATION TO BE DETERMINED BY DISTRICT
02.444	EXISTING ASPHALT PAVING TO REMAIN, PROTECT IN-PLACE, PREP AREA TO RECIEVE NEW PORTABLE BUILDING PER CIVIL DRAWINGS
02.445	DEMO PORTION OF EXISTING ASPHALT PAVING AND ASSOCIATED LANDSCAPE, INFILL AND PREPARE FOR CONTRUCTION OF NEW STEM WALL AND ASPHALT PAVING TO MATCH EXISTING PER CIVIL DRAWINGS, RELOCATE CONDUITS PER ELECTRICAL DRAWING
05.507	METAL LANDING PLATFORM, SEE MODULAR BUILDING PLANS FOR MORE INFO
05.512	42" HIGH GALV. STL PIPE GUARDRAIL
05.539	ACCESSIBLE METAL RAMP, SEE DETAIL 22/ASD-1.0 AND MODULAR BUILDING PLANS FOR MORE INFO
23.810	EXISTING BARD HVAC EQUIPMENT TO REMAIN
32.1216	ASPHALT PAVING PER CIVIL DRAWINGS
32.1216.50	ASPHALT PAVING AT LANDING PER CIVIL DRAWINGS
32.3117	NEW 6'- 0" CHAIN LINK FENCE
32.3120	NEW DECORATIVE METAL FENCE

LEGEND

- NEW WORK AREA BOUNDARY
- (E) BUILDING TO REMAIN
- (E) ASPHALT PAVING, TO REMAIN, PROTECT IN PLACE
- (E) CONCRETE PAVING, TO REMAIN, PROTECT IN PLACE
- (E) LANDSCAPE TO REMAIN, PROTECT IN PLACE
- (D) LANDSCAPE/ DG
- (N) RELO BUILDINGS
- (N) LANDSCAPE
- (N) CONCRETE PAVING, FOR ADDITIONAL INFORMATION, SEE CIVIL DETAILS: (2 / ASD-1.0)
- (N) ASPHALT PAVING, FOR ADDITIONAL INFORMATION, SEE CIVIL DRAWINGS. (3 / ASD-1.0)
- EXISTING WALK OVERHEAD LINE ABOVE.
- EXISTING FENCE TO REMAIN, PROTECT IN PLACE.
- (N) CHAINLINK FENCE
- EXISTING ORNAMENTAL FENCE TO REMAIN
- ORNAMENTAL FENCE TO REMAIN
- GX — GATE NUMBER, SEE GATE SCHEDULE
- (E) TREE TO REMAIN
- (E) DRINKING FOUNTAIN TO REMAIN
- ACCESSIBLE ROOM NAME AND NUMBER

NARANCA ES RELOCATABLE CLASSROOM BUILDINGS:

PROJECT No. :1-16-21
8/17/2026 5:17:49 PM

DRAWN BY:
DELTA # _____ DATE _____
DELTA # _____ DATE _____
DELTA # _____ DATE _____
DELTA # _____ DATE _____

CHECKED BY:
☐ ADD ☐ AFO ☐ CCD ☐ REV
☐ ADD ☐ AFO ☐ CCD ☐ REV
☐ ADD ☐ AFO ☐ CCD ☐ REV
☐ ADD ☐ AFO ☐ CCD ☐ REV

RUHNAUCLARKE.COM
3775 TENTH STREET, RIVERSIDE CALIFORNIA 92501 (951) 684 4664 / 5751 PALMER WAY, SUITE C, CARLSBAD CALIFORNIA 92010 (760) 438 5899

NARANCA ES RELOCATABLE CLASSROOM BUILDINGS
NARANCA ELEMENTARY SCHOL
1030 NARANCA AVE, EL CAJON, CA 92021
CAJON VALLEY UNION SCHOOL DISTRICT

ENLARGED SITE PLANS & SITE DETAILS

AS-3.0

1-16-21

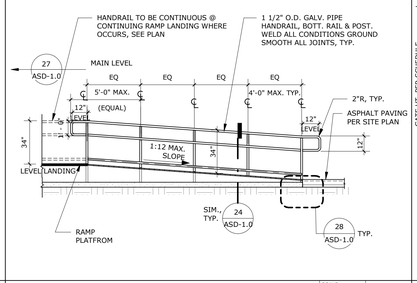

RAMP ELEV. W/HANDRAIL | SCALE: 1/4" = 1'-0" | 22

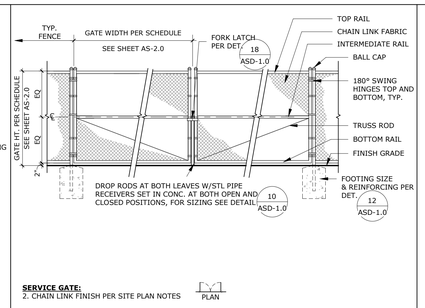

CHAINLINK SERVICE GATE (PR) | SCALE: 1/4" = 1'-0" | REF.: / | 16

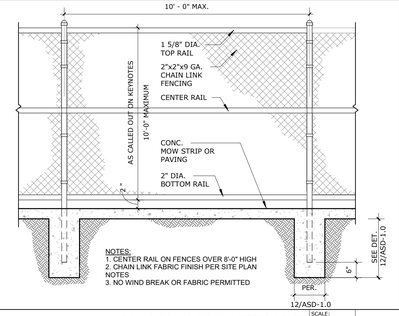

CHAIN LINK FENCE | SCALE: 1/2" = 1'-0" | 11

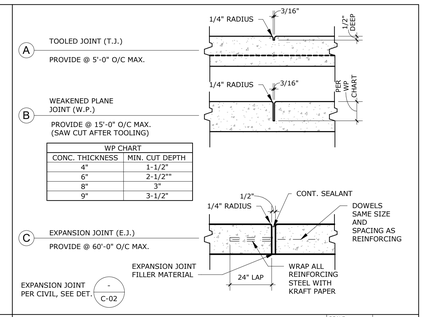

WP CHART	
CONC. THICKNESS	MIN. CUT DEPTH
4"	1-1/2"
6"	2-1/2""
8"	3"
9"	3-1/2"

TYP. CONCRETE JOINT DETAILS | SCALE: 1 1/2" = 1'-0" | 6

AGENCY APPROVAL
File No: ######A\04-125522

IDENTIFICATION STAMP
DIV. OF THE STATE ARCHITECT
APP: 04-125522 INC:
REVIEWED FOR
SS ☑ FLS ☑ ACS ☑
DATE: 08/19/2026

STAMPS

CONSULTANT BRANDING

RUHNAU CLARKE ARCHITECTS

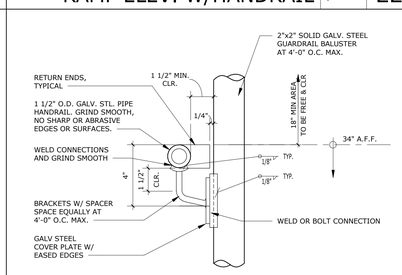

BRACKET @ GUARDRAIL | SCALE: 3" = 1'-0" | 24

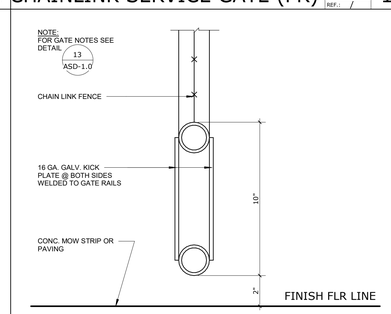

CHAINLINK GATE - KICKPLATE | SCALE: 3" = 1'-0" | 17

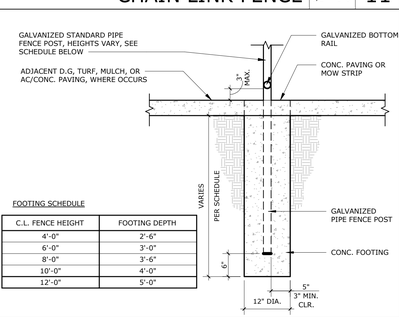

FOOTING SCHEDULE

C.L. FENCE HEIGHT	FOOTING DEPTH
4'-0"	2'-6"
6'-0"	3'-0"
8'-0"	3'-6"
10'-0"	4'-0"
12'-0"	5'-0"

CL FENCE POST FOOTING | SCALE: 3/4" = 1'-0" | 12

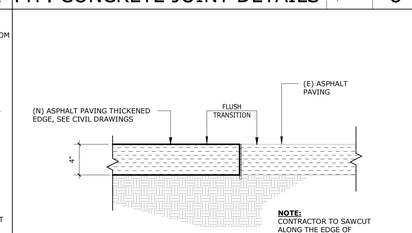

(N) AC TO (E) AC PAVING | SCALE: 1 1/2" = 1'-0" | 7

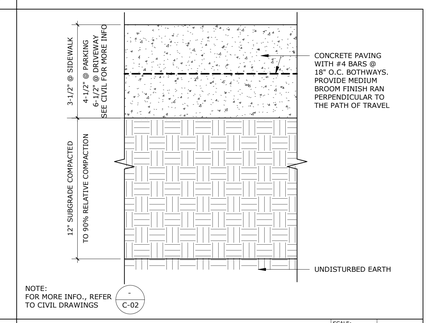

CONCRETE PAVING | SCALE: 12" = 1'-0" | 2

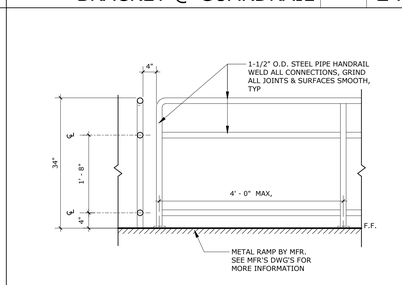

HANDRAIL ELEV. & SECTION | SCALE: 3/4" = 1'-0" | 27

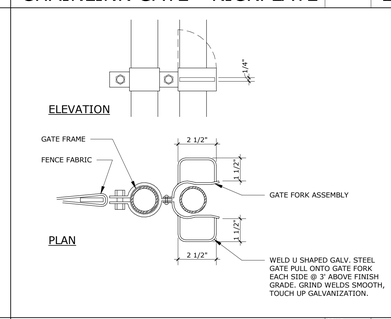

FORK LATCH PULLS | SCALE: 3" = 1'-0" | 18

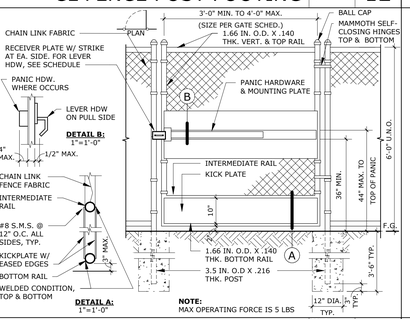

CHAIN LINK GATE WITH PANIC | SCALE: 1/2" = 1'-0" | 13

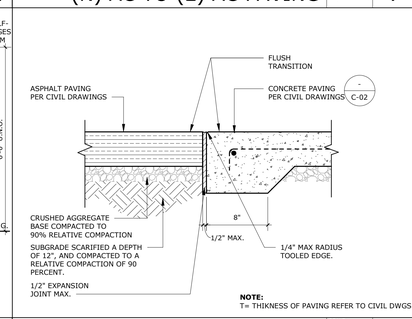

ASPHALT TO CONCRETE | SCALE: 1 1/2" = 1'-0" | 8

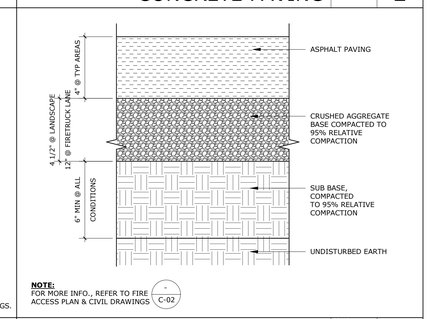

ASPHALT PAVING | SCALE: 12" = 1'-0" | 3

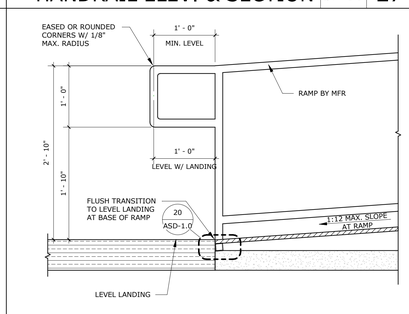

RELO RAMP TRANSITION | SCALE: 1" = 1'-0" | 28

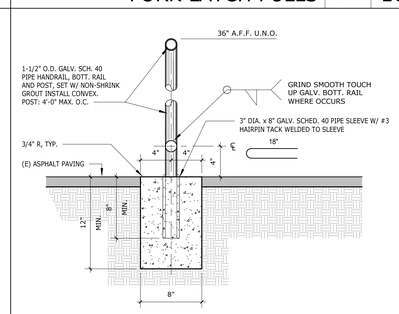

RAIL FOOTING | SCALE: 1 1/2" = 1'-0" | REF.: 7/A1-1.1 | 19

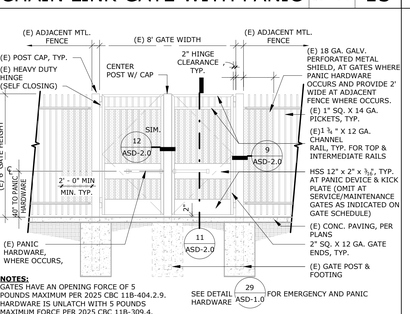

(E) MTL PEDESTRIAN (PR) GATE | SCALE: 1/4" = 1'-0" | 14

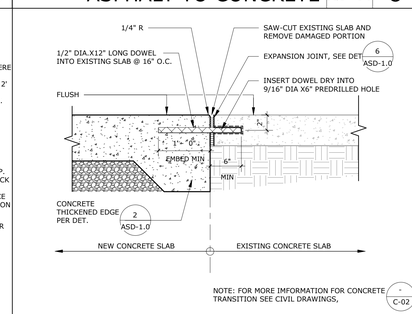

(E) TO (N) CONC. JOINING | SCALE: 1 1/2" = 1'-0" | 9

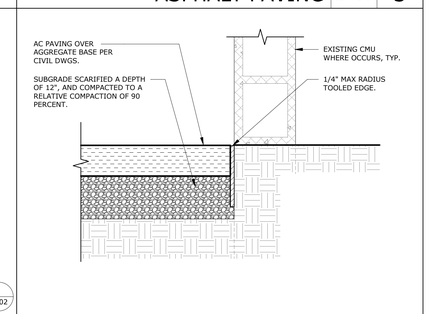

AC PAVING EDGE @ PA | SCALE: 1 1/2" = 1'-0" | 4

EMERGENCY EXIT AND PANIC HARDWARE:
INDICATE ON PLANS AND/OR SPECIFICATIONS COMPLIANCE WITH SFM STANDARD 12-10-3, SECTION 12-10-302:
(A) THE CROSS-BAR SHALL EXTEND ACROSS NOT LESS THAN ONE-HALF THE WIDTH OF THE DOOR/GATE.
(D) THE ENDS OF THE CROSS-BAR SHALL BE CURVED, GUARDED OR OTHERWISE DESIGNED TO PREVENT CATCHING ON THE CLOTHING OF PERSONS DURING EGRESS.

• CLOSER SHALL BE ADJUSTED SO THAT THE REQUIRED TIME TO MOVE A DOOR FROM AN OPEN POSITION OF 90 DEGREES TO A POSITION OF 12 DEGREES FROM THE LATCH IS 5 SECONDS MINIMUM PER CBC 11B-404.2.8.
• SPRING HINGES SHALL BE ADJUSTED SO THAT THE REQUIRED TIME TO MOVE A DOOR FROM AN OPEN POSITION OF 70 DEGREES TO THE CLOSED POSITION IS 1.5 SECONDS MINIMUM PER CBC 11B-404.2.8.

EXISTING GATE NOTES | SCALE: 1/4" = 1'-0" | 29

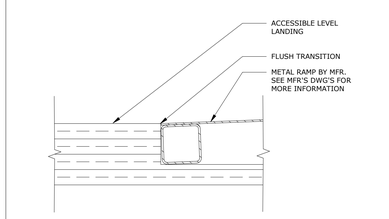

RAMP @ AC PAVING TRASITION | SCALE: 1/4" = 1'-0" | 20

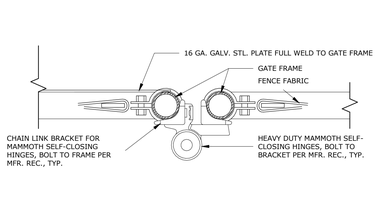

C.L. GATE HINGE POST | SCALE: 3" = 1'-0" | REF.: / | 15

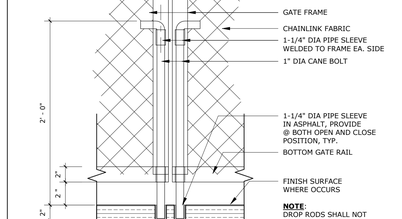

CHAINLINK GATE DROP LATCH | SCALE: 1 1/2" = 1'-0" | REF.: / | 10

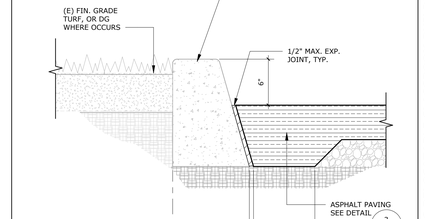

ASPHALT/CURB TO LANDSCAPE | SCALE: 1 1/2" = 1'-0" | 5

NARANCA ES RELOCATABLE CLASSROOM BUILDINGS:

PROJECT No. :1-16-21
8/17/2026 5:17:57 PM

DRAWN BY:		CHECKED BY:				
DELTA # ____	DATE ____	☐ ADD	☐ AFO	☐ CCD	☐ REV	
DELTA # ____	DATE ____	☐ ADD	☐ AFO	☐ CCD	☐ REV	
DELTA # ____	DATE ____	☐ ADD	☐ AFO	☐ CCD	☐ REV	
DELTA # ____	DATE ____	☐ ADD	☐ AFO	☐ CCD	☐ REV	

RUHNAUCLARKE.COM
3775 TENTH STREET, RIVERSIDE CALIFORNIA 92501 (951) 684 4664 / 5751 PALMER WAY, SUITE C, CARLSBAD CALIFORNIA 92010 (760) 438 5899

NARANCA ES RELOCATABLE CLASSROOM BUILDINGS
NARANCA ELEMENTARY SCHOL
1030 NARANCA AVE, EL CAJON, CA 92021
CAJON VALLEY UNION SCHOOL DISTRICT

SITE DETAILS

ASD-1.0

1-16-21

AGENCY APPROVAL
File No.: ######A1/04-125522

IDENTIFICATION STAMP
DIV. OF THE STATE ARCHITECT
APP: 04-125522 INC:
REVIEWED FOR
SS ☑ FLS ☑ ACS ☑
DATE: 08/19/2026

STAMPS

CONSULTANT BRANDING

RUHNAU CLARKE ARCHITECTS

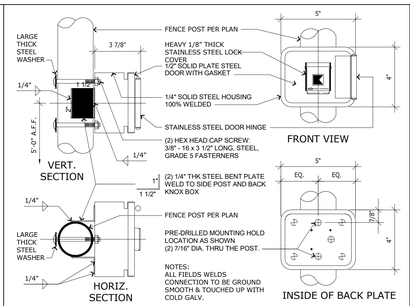

TYP. KNOX BOX ATTACHMENT | SCALE: 12" = 1'-0" | 16

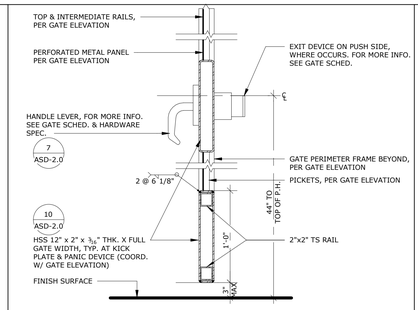

PEDESTRIAN GATE - SECTION | SCALE: 1 1/2" = 1'-0" | 11

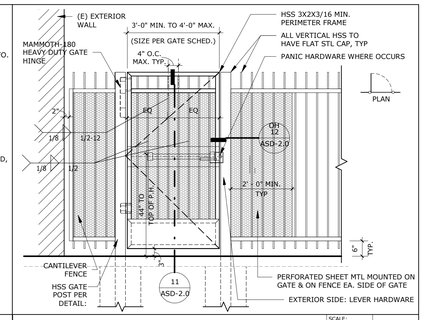

METAL GATE ELEVATION | SCALE: 1/2" = 1'-0" | 6

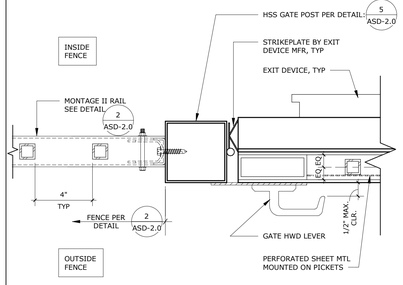

MTL GATE @ STOP POST | SCALE: 3" = 1'-0" | 12

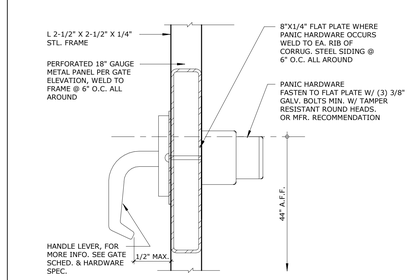

MTL GATE PANIC HARDWARE | SCALE: 3" = 1'-0" | 7

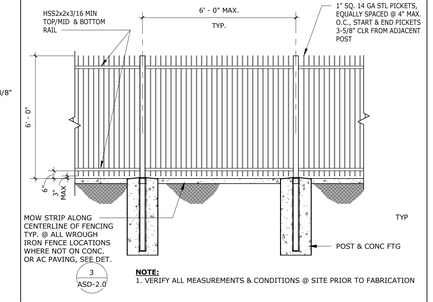

STEEL FENCE ELEVATION | SCALE: 1/4" = 1'-0" | 2

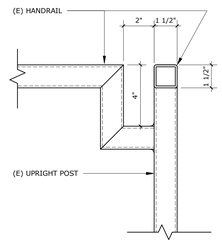

RAIL NOTCH AT HANDRAIL | SCALE: 3" = 1'-0" | 13

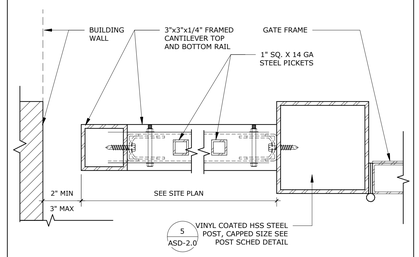

MTL FENCE @ SITE WALL | SCALE: 3" = 1'-0" | 8

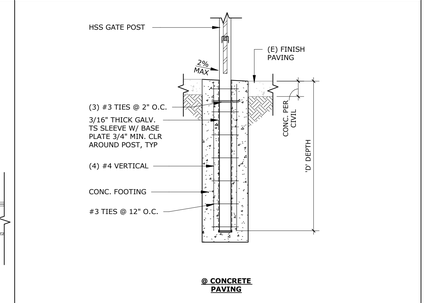

METAL FENCE POST FOOTING | SCALE: 3/4" = 1'-0" | 3

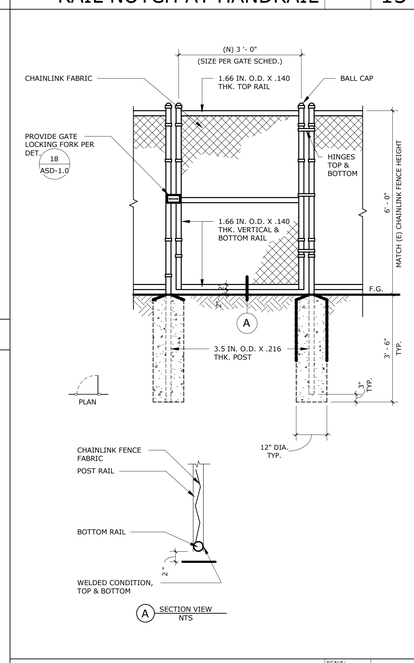

CHAINLINK SERVICE GATE | SCALE: 1/2" = 1'-0" | 15

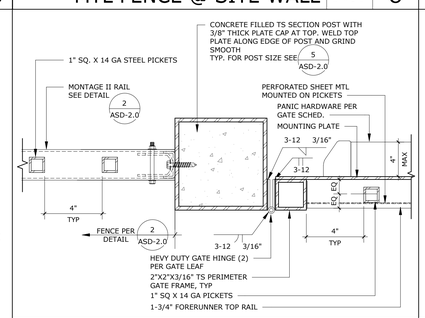

MTL SWING GATE JAMB | SCALE: 3" = 1'-0" | 9

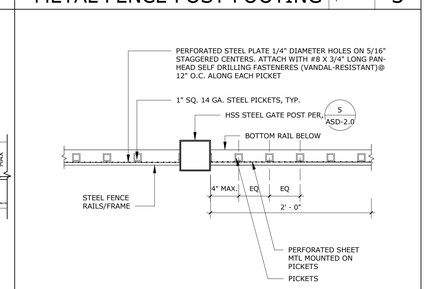

METAL GATE PLAN | SCALE: 1 1/2" = 1'-0" | 4

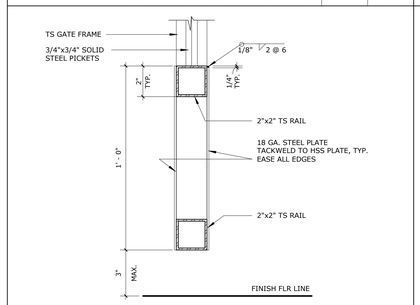

MTL GATE KICK PLATE | SCALE: 3" = 1'-0" | 10

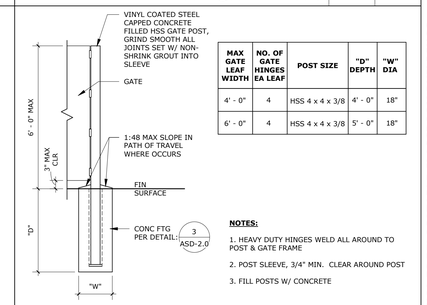

MAX GATE LEAF WIDTH	NO. OF GATE HINGES EA LEAF	POST SIZE	"D" DEPTH	"W" DIA
4' - 0"	4	HSS 4 x 4 x 3/8	4' - 0"	18"
6' - 0"	4	HSS 4 x 4 x 3/8	5' - 0"	18"

NOTES:

1. HEAVY DUTY HINGES WELD ALL AROUND TO POST & GATE FRAME
2. POST SLEEVE, 3/4" MIN. CLEAR AROUND POST
3. FILL POSTS W/ CONCRETE

MTL GATE POST FTG SCHED | SCALE: 1/4" = 1'-0" | 5

NARANCA ES RELOCATABLE CLASSROOM BUILDINGS:

PROJECT No. :1-16-21
8/17/2026 5:18:00 PM

DRAWN BY:		CHECKED BY:			
DELTA # ____	DATE _____	☐ ADD	☐ AFO	☐ CCD	☐ REV
DELTA # ____	DATE _____	☐ ADD	☐ AFO	☐ CCD	☐ REV
DELTA # ____	DATE _____	☐ ADD	☐ AFO	☐ CCD	☐ REV
DELTA # ____	DATE _____	☐ ADD	☐ AFO	☐ CCD	☐ REV

RUHNAUCLARKE.COM

3775 TENTH STREET, RIVERSIDE CALIFORNIA 92501 (951) 684 4664 / 5751 PALMER WAY, SUITE C, CARLSBAD CALIFORNIA 92010 (760) 438 5899

NARANCA ES RELOCATABLE CLASSROOM BUILDINGS
NARANCA ELEMENTARY SCHOL
1030 NARANCA AVE, EL CAJON, CA 92021
CAJON VALLEY UNION SCHOOL DISTRICT

GATE & SITE DETAILS

ASD-2.0

1-16-21

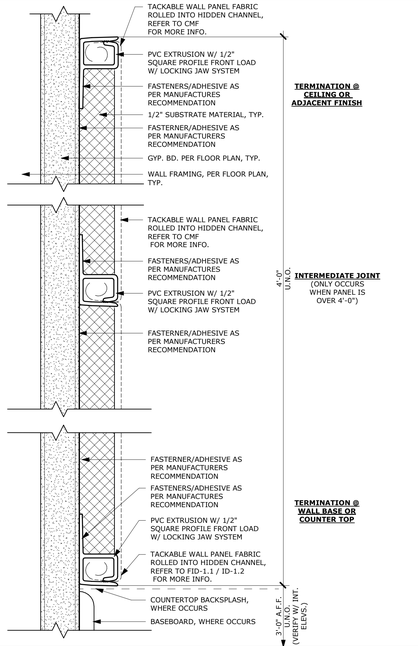

TACKABLE WALL PANEL

SCALE: 12" = 1'-0" | 13

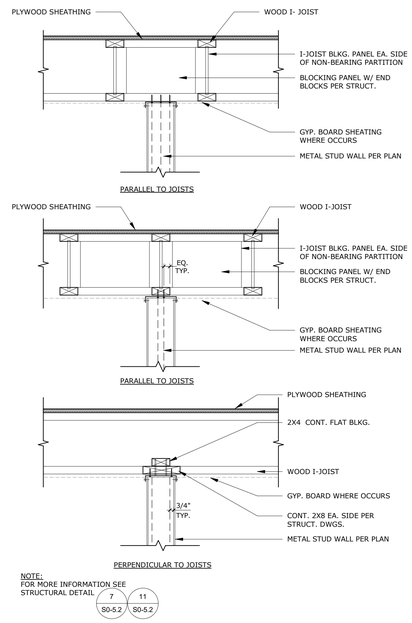

STUD WALL TO STRUCTURE

SCALE: 1" = 1'-0" | 8

NOTE:
SIGNAGE SHALL BE PROVIDED BY CONTRACTOR OR DISTRICT FOR CERTIFICATION. REFER TO PC (A# 04-124199) MODULAR BUILDING FLOOR PLANS ON SHEETS, A1.0, AND A1.2.

NEW A.L.S. CALCULATOINS

BUILDING	ROOM NAME	ROOM #	# OF OCC	# OF RECEIVERS REQUIRED = (# OF SEATS)(4%)	# OF HEARING-AID COMATIBLE RECEIVERS = (# OF RECEIEVERES)(25%)	TOTAL # OF RECEIVERS PROVIDED
BLDG `30'	CLASSROOM	30	10	(10 OCC)X(0.04%) = 0.4, 2 PROVIDED	(1 RECEIVERS)(0.25) = .25 0.5, 2 PROVIDED	2 H.A.C. REC.
				TOTAL # OF RECEIVERS PROVIDED 2	2 MINIMUN HEARING AID COMPATIBLE RECEIEVER	

NOTES:
1. PER CBC SECTION 11B-219.3, THE MIN. # OF RECEIVERS TO BE PROVIDED SHALL BE EQUAL TO 4% OF TOTAL # OF OCCUPANTS, BUT IN NO CASE LESS THAN TWO. 25% MIN. OF RECEIVERS PROVIDED, BUT NO FEWER THAN TWO, SHALL BE HEARING-AID COMPATIBLE

NEW A.L.S. CALCS 12 X 40

SCALE: 1/4" = 1'-0" | 3

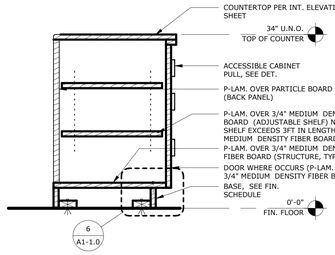

BASE CABINET

SCALE: 1" = 1'-0" | 4

NOTE:
1. FOR MORE INFORMATION ON FLOOR PLAN, INTERIOR & EXTERIOR ELEVATIONS, SEE PC SHEET **A1.0**, **A4.0** AND **A5.0** RESPECTIVELY AS PART OF THE PC DRAWINGS.
2. RAMP PER DETAIL **16/A1.0**
3. WOOD FOUNDATION PER PC DRAWINGS

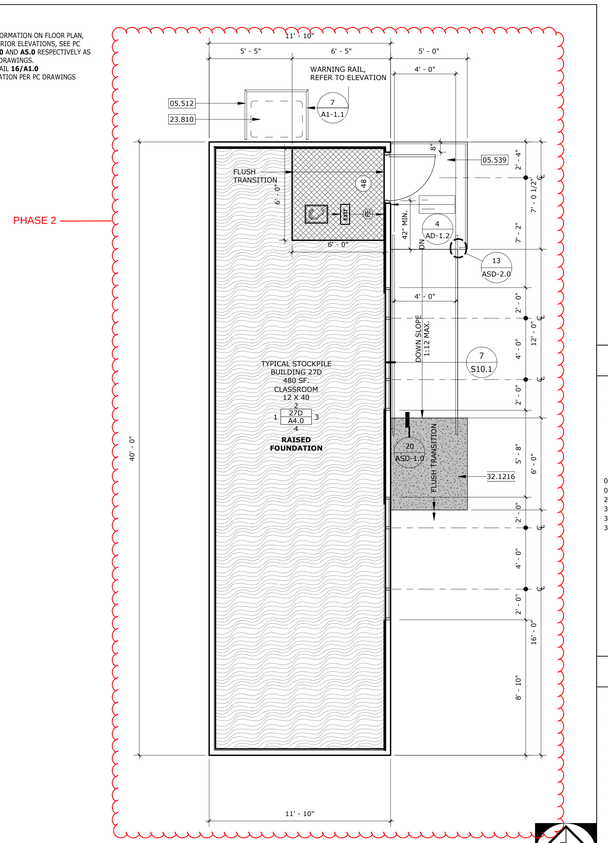

NOTE:
1. FOR MORE INFO., SEE PC DRAWINGS SHEET A1.0 WITH A# 02-124199
2. ALL DOORS OR SPACES THAT HAVE AN OCCUPANT LOAD OF 5 OR MORE SHALL BE EQUIPPED WITH HARDWARE THAT IS LOCKABLE FROM THE INSIDE PER CBC SECTION 1010.2.2

12 X 40 FLOOR PLAN - BLDG 27D

SCALE: 1/4" = 1'-0" | 1

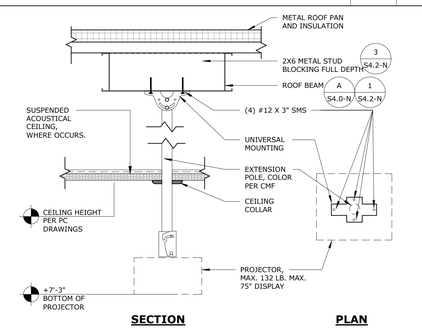

CEILING PROJECTOR MOUNT

SCALE: 1" = 1'-0" | 9

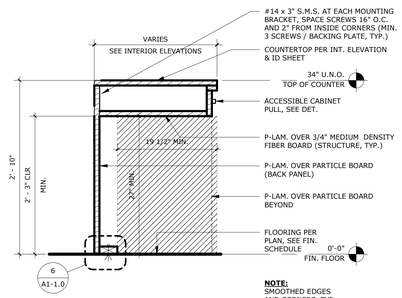

ACCESSIBLE BASE CABINET

SCALE: 1" = 1'-0" | 5

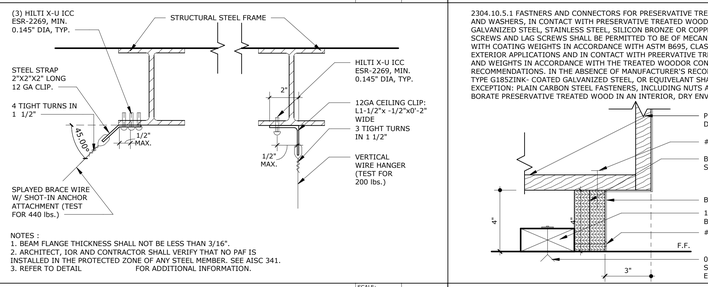

NOTES :
1. BEAM FLANGE THICKNESS SHALL NOT BE LESS THAN 3/16".
2. ARCHITECT, IOR AND CONTRACTOR SHALL VERIFY THAT NO PAF IS INSTALLED IN THE PROTECTED ZONE OF ANY STEEL MEMBER. SEE AISC 341.
3. REFER TO DETAIL FOR ADDITIONAL INFORMATION.

WIRE CONN. @ STRUCT'L STEEL

SCALE: 3" = 1'-0" | 10

2304.10.5.1 FASTNERS AND CONNECTORS FOR PRESERVATIVE TREATED WOOD. FASTNERS INCLUDING NUTS AND WASHERS, IN CONTACT WITH PRESERVATIVE TREATED WOOD SHALL BE OF HOT-DIPPED ZINK-COATED GALVANIZED STEEL, STAINLESS STEEL, SILICON BRONZE OR COPPER. STABLES, TIMBER RIVETS, WOOD SCREWS AND LAG SCREWS SHALL BE PERMITTED TO BE OF MECANICALLY DEPOSETED ZINC-COATED STEEL WITH COATING WEIGHTS IN ACCORDANCE WITH ASTM B695, CLASS 55 MIN. CONNECTORS THAT ARE USED IN EXTERIOR APPLICATIONS AND IN CONTACT WITH PREERVATIVE TREATED WOOD SHALL HAVE COATING TYPES AND WEIGHTS IN ACCORDANCE WITH THE TREATED WOODOR CONNECTORS MANUFACTURER'S RECOMMENDATIONS. IN THE ABSENCE OF MANUFACTURER'S RECOMMENDATIONS NOT LESS THAN ASTM A653, TYPE G185ZINK- COATED GALVANIZED STEEL, OR EQUIVELANT SHALL BE USED.
EXCEPTION: PLAIN CARBON STEEL FASTENERS, INCLUDING NUTS AND WASHERS, IN SBX/DOT AND ZINC BORATE PRESERVATIVE TREATED WOOD IN AN INTERIOR, DRY ENVIROMENT SHALL BE PERMITTED.

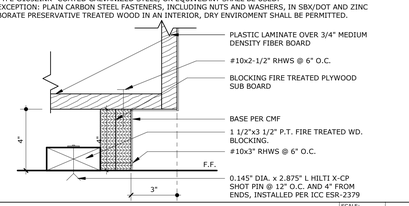

BASE CABINET ANCHORAGE

SCALE: 3" = 1'-0" | 6

NOTE:
1. FOR MORE INFORMATION ON FLOOR PLAN, INTERIOR & EXTERIOR ELEVATIONS, SEE PC SHEET **A1.2**, **A4.1** AND **A5.0A** RESPECTIVELY AS PART OF THE PC DRAWINGS.
2. CONCRETE FOUNDATION PER PC DRAWINGS

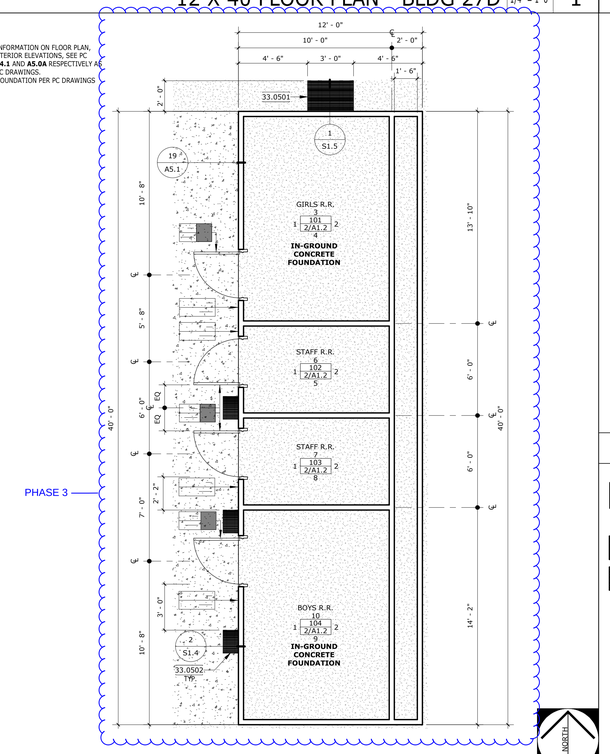

RESTROOM FLOOR PLAN-BLDG RR

SCALE: 1/4" = 1'-0" | 2

STAMPS

AGENCY APPROVAL
File No: ######A#/04-125522

IDENTIFICATION STAMP
DIV. OF THE STATE ARCHITECT
APP: 04-125522 INC:
REVIEWED FOR
SS ☑ FLS ☑ ACS ☑
DATE: 08/19/2026

CONSULTANT BRANDING

RUHNAU
CLARKE
ARCHITECTS

GENERAL NOTES

1. VERIFY ALL DIMENSIONS PRIOR TO CONSTRUCTION.
2. ALL DIMENSIONS ARE TO FACE OF STUD, CENTERLINE OF COLUMN OR EDGE OF SLAB, U.N.O.
3. SIGNAGE AND ELEMENTS IDENTIFIED AS "BY OTHERS" OR "BY OWNER" TO BE PROVIDED PER A# 02-124199

05.512 42" HIGH GALV. STL PIPE GUARDRAIL
05.539 ACCESSIBLE METAL RAMP, SEE DETAIL 22/ASD-1.0 AND MODULAR BUILDING PLANS FOR MORE INFO
23.810 EXISTING BARD HVAC EQUIPMENT TO REMAIN
32.1216 ASPHALT PAVING PER CIVIL DRAWINGS
33.0501 FOUNDATION ACCESS/VENT WELL PER 1/S1.5-LOCATION MAY VARY
33.0502 4'-0"x18" MAX. VENT SPACE

FINISH NOTES

1. ALL FINISHES SHALL COMPLY WITH CBC CHAPTERS 3, 8, & 10, CFC AND CCR TITLE 19 AND STATE OF CALIFORNIA TECHNICAL BULLETIN 117-2013.
2. WALL AND CEILING MATERIALS SHALL NOT EXCEED THE FLAME SPREAD CLASSIFICATIONS IN CBC TABLE 803.13.
3. ALL ADJACENT DISSIMILAR FINISH MATERIALS TO RECEIVE BEAD OF CAULK, U.N.O.
4. ALL EXPOSED STEEL, HOLLOW METAL DOORS AND FRAMES, AND LOUVERS TO BE PAINTED.
5. AT COVE BASE, PROVIDE CONTINUOUS 3/8" RADIUS
6. ALL FLOOR FINISHES SHALL BE STABLE, FIRM, & SLIP RESISTANT PER CBC SECTION 11B-302.1.
7. CARPET / CARPET TILE FLOORING SHALL BE SECURELY ATTACHED WITH FIRM BACKING AND PILE HEIGHT OF 1/2" MAX. PER CBC SECTION 11B-302.2. CARPET EDGES SHALL COMPLY WITH CBC SECTION 11B-303.
8. ALL FLOOR FINISHES SHALL EXTEND BELOW ACCESSIBLE WORK SURFACES, SINKS, ETC. FOR THE REQUIRED TOE/KNEE CLEARANCE.
9. REFER TO CORRESPONDING SPECIFICATIONS FOR BURNING CHARACTERISTICS AND TESTING REQ.
10. FOR FINISHED SCHEDULE, SEE **S/A1-1.1**

FINISH ABBREVIATIONS

ACP	ACOUSTICAL CEILING PANEL (SUSPENDED)
ACT	ACOUSTICAL CEILING TILE
AWP	ACOUSTIC WALL PANEL
CONC	CONCRETE
CPL	CEMENT PLASTER
CPT	CARPET
EPOXY	EPOXY FLOOR
EPT	EPOXY TERRAZZO
EXP	EXPOSED
FF	FACTORY FINISH
GPL	GYPSUM PLASTER
GWB	GYPSUM WALLBOARD
GWWB	WATER RESISTANT GWB
LVT	LUXURY VINYL TILE
OP	OPERABLE PARTITION
PES	PAINT - EGGSHELL
PL	PLASTIC LAMINATE
PF	PAINT, FLAT
PSG	PAINT, SEMI-GLOSS
RB	RUBBER BASE
RES	RESINOUS/EPOXY FLOORING
RF	RUBBER FLOORING
RS	ROLLER SHADE SYSTEM
S	SEAL
SEAL	SEALED
SSM	SOLID SURFACE MATERIAL
SV	SHEET VINYL
T	TILE
TWP	TACKABLE WALL PANEL
U.O.S.	UNDERSIDE OF STRUCTURE
VCT	VINYL COMPOSITION TILE
VF	VINYL FABRIC
WD	WOOD

FLOOR FINISH LEGEND

TILING
PT-1
T-1

CARPETING
CPT-1
CPT-2

XX OCCUPANCY
ASSISTIVE LISTENING SIGNAGE 15 AD-1.2
EXIT RAMP DOWN SIGN 7 AD-1.2
FE FIRE EXTINGUISHER 10 AD-1.2
ROOM NAME AND NUMBER 4 AD-1.2
ACCESSIBLE RESTROOM SIGNAGE 22 AD-1.2

NOTE:
REFER TO COLORS, MATERIALS AND FINISHES LEGEND FOR ADDITIONAL INFORMATION

NARANCA ES RELOCATABLE CLASSROOM BUILDINGS:

PROJECT No. :1-16-21
8/17/2026 5:18:04 PM

DRAWN BY:
DELTA # ____ DATE _____
DELTA # ____ DATE _____
DELTA # ____ DATE _____
DELTA # ____ DATE _____

CHECKED BY:
☐ ADD ☐ AFO ☐ CCD ☐ REV
☐ ADD ☐ AFO ☐ CCD ☐ REV
☐ ADD ☐ AFO ☐ CCD ☐ REV
☐ ADD ☐ AFO ☐ CCD ☐ REV

RUHNAUCLARKE.COM
3775 TENTH STREET, RIVERSIDE CALIFORNIA 92501 (951) 684 4664 / 5751 PALMER WAY, SUITE C, CARLSBAD CALIFORNIA 92010 (760) 438 5899

NARANCA ES RELOCATABLE CLASSROOM BUILDINGS
1030 NARANCA AVE, EL CAJON, CA 92021
CAJON VALLEY UNION SCHOOL DISTRICT

12" X 40" RELO FLOOR PLAN

A1-1.0

1-16-21

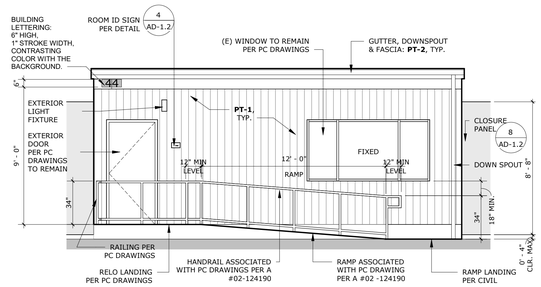

RELO EAST ELEVATION | SCALE: 1/4" = 1'-0" | 6

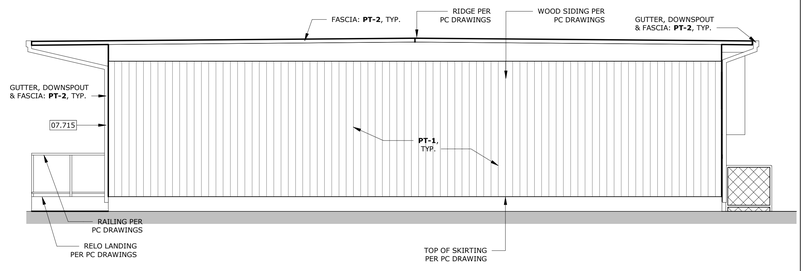

RELO NORTH ELEVATION | SCALE: 1/4" = 1'-0" | 2

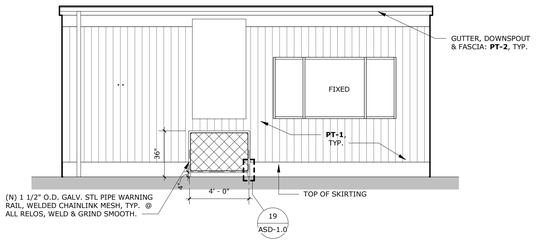

RELO WEST ELEVATION | SCALE: 1/4" = 1'-0" | 7

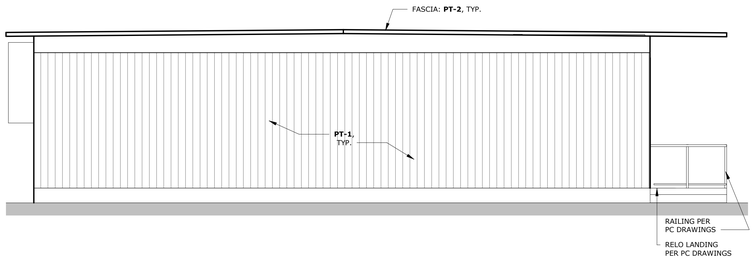

RELO SOUTH ELEVATION | SCALE: 1/4" = 1'-0" | 3

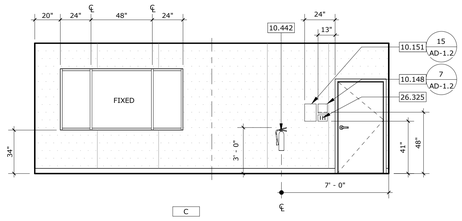

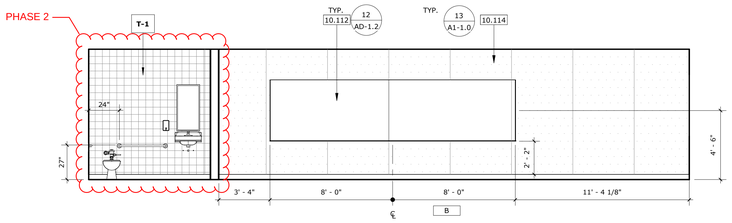

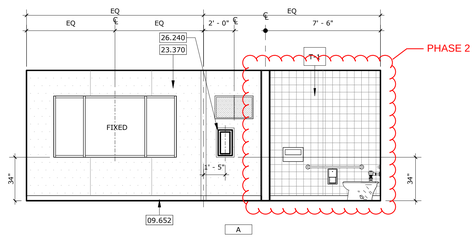

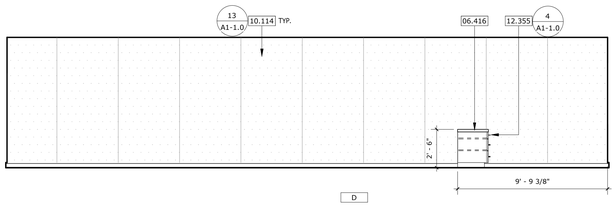

20 X 40 RELO INTERIOR ELEVATIONS | SCALE: 1/4" = 1'-0" | 4

ROOM NO.	ROOM NAME	FLOOR MATERIAL	FLOOR COLOR	BASE MATERIAL	BASE COLOR	ELEVATION 1 MATERIAL	ELEVATION 1 FINISH	ELEVATION 1 COLOR	ELEVATION 2 MATERIAL	ELEVATION 2 FINISH	ELEVATION 2 COLOR	ELEVATION 3 MATERIAL	ELEVATION 3 FINISH	ELEVATION 3 COLOR	ELEVATION 4 MATERIAL	ELEVATION 4 FINISH	ELEVATION 4 COLOR	CEILING MATERIAL	CEILING FINISH	CEILING COLOR	REMARKS	ROOM NO.
27B/27C	CLASSROOM 30 X 32	CPT	CPT-1/ CPT-2	RB	RB-1	TWP	FF	TWP-1	TWP	FF	TWP-1	TWP	FF	TWP-1	TWP	FF	TWP-1	(E) ACT	FF	EXIST		27B/27C
27D	CLASSROOM 12 X 40	CPT	CPT-1/ CPT-2	RB	RB-1	TWP	FF	TWP-1	TWP	FF	TWP-1	TWP	FF	TWP-1	TWP	FF	TWP-1	(E) ACT	FF	EXIST		27D
44	CLASSROOM 24 X 40	CPT	CPT-1/ CPT-2	RB	RB-1	TWP	FF	TWP-1	TWP	FF	TWP-1	TWP	FF	TWP-1	TWP	FF	TWP-1	(E) ACT	FF	EXIST		44
44A	ALL GENDER RESTROOM	TILE	T-1	T	T-1	T	FF	T-1	T	FF	T-1	T	FF	T-1	T	FF	T-1	(E) ACT	FF	EXIST		44A
101	GIRLS R.R.	TILE																(E) ACT	FF	EXIST		101
102	STAFF R.R.	TILE																(E) ACT	FF	EXIST		102
103	STAFF R.R.	TILE																(E) ACT	FF	EXIST		103
104	BOYS R.R.	TILE																(E) ACT	FF	EXIST		104

COLORS, MATERIALS AND FINISHES LEGEND

09 65 00 - RESILIENT FLOORING (RUBBER BASE)
RB-1 ROPPE, 700 SERIES 'BLACK' 4"H RUBBER COVE BASE — RUBBER BASE

09 68 16 - CARPET FLOORING
CPT-1 TARKETT, APPLAUSE III, COLOR: 28517 'MARINE' 6' W/ POWERBOND CUSHION RS
CPT-2 TARKETT, ABRASIVE ACTION II, COLOR: 19103 'WINTER GREY' 6' W/ POWERBOND CUSHION RS — TYPICAL FLOORING WALK-OFF CARPET

10 11 00 - RESILIENT TACKABLE WALL COVERING
TWP-1 CHATFIELD CLARKE, COLOR: MISTY GRAY — TYPICAL TACKWALL PANEL

09 91 13 - EXTERIOR PAINTING
PT-1 DUNN EDWARDS, EVERSHIELD, FINISH: 30 - EGGSHELL, COLOR: TBD
PT-2 DUNN EDWARDS, ARISTOSHIELD, FINISH: 50 - SEMI-GLOSS, COLOR: TBD — TYPICAL EXTERIOR TYPICAL ACCENT ON DOORS, DOOR FRAMES, GUTTERS & FASCIA

T-1 DALTILE, VOLUME 1.0, COLOR: SONIC WHITE VL75, FINISH: MATTE, 12X12 W/ COVE BASE 6X12 — TYPICAL RESTROOM FLOOR & WALL TILE

ROOM SCHEDULE, MATERIALS AND FINISHES | SCALE: 1 1/2" = 1'-0" | 5

NOTE:
FOR MORE INFORMATION ON FLOOR PLAN, INTERIOR & EXTERIOR ELEVATIONS, SEE PC SHEET **A1.0-M, A4.0-M** AND **A5.0-M** RESPECTIVELY AS PART OF THE PC DRAWINGS.

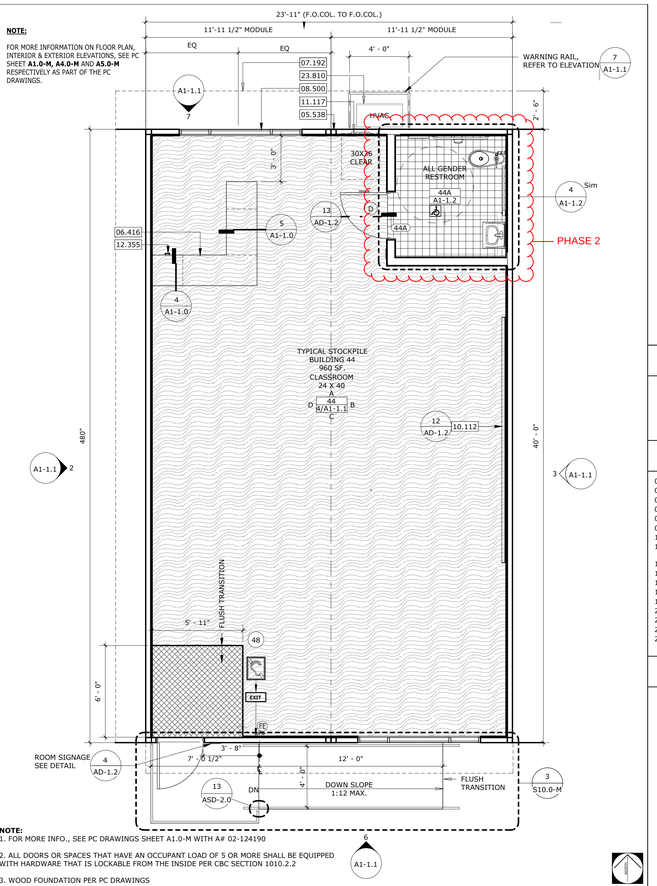

NOTE:
1. FOR MORE INFO., SEE PC DRAWINGS SHEET A1.0-M WITH A# 02-124190
2. ALL DOORS OR SPACES THAT HAVE AN OCCUPANT LOAD OF 5 OR MORE SHALL BE EQUIPPED WITH HARDWARE THAT IS LOCKABLE FROM THE INSIDE PER CBC SECTION 1010.2.2
3. WOOD FOUNDATION PER PC DRAWINGS

PORTABLE FLOOR PLAN - BLDG 44 | SCALE: 1/4" = 1'-0" | 1

NOTE:
SIGNAGE SHALL BE PROVIDED BY CONTRACTOR OR DISTRICT FOR CERTIFICATION. REFER TO PC (A# 04-124190) MODULAR BUILDING FLOOR PLAN ON SHEET A1.0-M.

NEW A.L.S. CALCULATOINS

BUILDING	ROOM NAME	ROOM #	# OF OCC	# OF RECEIVERS REQUIRED = (# OF SEATS)(4%)	# OF HEARING-AID COMATIBLE RECIEVERS = (# OF RECEIEVERES)(25%)	TOTAL # OF RECEIVERS PROVIDED
BLDG '27'	CLASSROOM	27	45	(17 OCC)X(0.04%) = 0.68, 1 PROVIDED	(1 RECEIVERS)(0.25) = 2.25 0.5, 2 PROVIDED	2 H.A.C. REC.
				TOTAL # OF RECEIVERS PROVIDED - 2	2 MINIMUN HEARING AID COMPATIBLE RECEIEVER	

NOTES:
1. PER CBC SECTION 11B-219.3, THE MIN. # OF RECEIVERS TO BE PROVIDED SHALL BE EQUAL TO 4% OF TOTAL # OF OCCUPANTS, BUT IN NO CASE LESS THAN TWO. 25% MIN. OF RECEIVERS PROVIDED, BUT NO FEWER THAN TWO, SHALL BE HEARING-AID COMPATIBLE

NEW A.L.S. CALCULATOINS

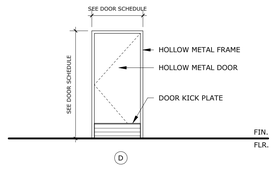

QTY		DESCRIPTION	CATALOG NUMBER	FINISH	MFR
3	EA	HINGE	5BB1 4.5 X 4.5 NRP	630	IVE
1	EA	CORRIDOR LOCK W/ OUTSIDE INDICATOR	L9456T 03N 09-544 OS-OCC	626	SCH
1	EA	FSIC CORE	23-030	626	SCH
1	EA	SURFACE CLOSER	4040XP EDA	689	LCN
1	EA	KICK PLAT	8400 10" X 2" LDW B-CS	630	IVE
1	EA	FLOOR STOP	FS18S	BLK	IVE
1	SET	GASKETING	328AR-S (AT JAMB LEGS)	AA	ZER
1	SET	GASKETING	429AR-S AT HEAD	AA	ZER
1	EA	THRESHOLD	THRESHOLD AS DETAILED		
1	EA	DOOR SWEEP	8192AA	AA	ZER

BLDG 44 RESTROOM 44A DOOR SCHEDULE | SCALE: 1/4" = 1'-0" | 9

AGENCY APPROVAL
File No: ######A#04-125522

IDENTIFICATION STAMP
DIV. OF THE STATE ARCHITECT
APP: 04-125522 INC:
REVIEWED FOR
SS ☑ FLS ☑ ACS ☑
DATE: 08/19/2026

STAMPS

CONSULTANT BRANDING

RUHNAU CLARKE ARCHITECTS

GENERAL NOTES

1. VERIFY ALL DIMENSIONS PRIOR TO CONSTRUCTION.
2. ALL DIMENSIONS ARE TO FACE OF STUD, CENTERLINE OF COLUMN OR EDGE OF SLAB, U.N.O.
3. SIGNAGE AND ELEMENTS IDENTIFIED AS "BY OTHERS" OR "BY OWNER" TO BE PROVIDED PER A# 04-124199

KEYNOTES

05.538	EXISTING CLOSURE AT MODULAR JOINT.
06.416	PLASTIC LAMINATE COUNTERTOP, PROVIDE GROMMETS AND RINGS @ 60" O.C. FOR POWER AND DATA
07.192	MODULAR ROOF OVERHEAD PER PC. DRAWINGS PER (A# 04-124190)
07.715	DOWNSPOUT
08.500	EXISTING WINDOW AND FRAME TO REMAIN
09.652	WALL BASE PER FINISH SCHEDULE
10.112	CLASSROOM MARKERBOARD PER DETAIL 12/AD-1.2
10.114	TACKABLE WALL PANEL SYSTEM, PER ROOM FINISH SCHEDULE. REFER TO SPECIFICATIONS 10 11 00 FOR MORE INFO
10.148	EXIT RAMP DOWN SIGNAGE
10.151	ASSISTIVE LISTENING SYSTEM SIGNAGE
10.442	WALL MOUNTED FIRE EXTINGUISHER, SEE DETAIL 10/AD-1.2
11.117	EXISTING ELECTRICAL PANEL
12.355	EDUCATIONAL/LIBRARY CASEWORK
23.370	AIR OUTLET/INLET
23.810	EXISTING BARD HVAC EQUIPMENT TO REMAIN
26.240	SWITHBOARD/PANELBOARD
26.325	EXISTING LIGHT SWITCH

FINISH NOTES

1. ALL FINISHES SHALL COMPLY WITH CBC CHAPTERS 3, 8, & 10, CFC AND CCR TITLE 19 AND STATE OF CALIFORNIA TECHNICAL BULLETIN 117-2013.
2. WALL AND CEILING MATERIALS SHALL NOT EXCEED THE FLAME SPREAD CLASSIFICATIONS IN CBC TABLE 803.13.
3. ALL ADJACENT DISSIMILAR FINISH MATERIALS TO RECEIVE BEAD OF CAULK, U.N.O.
4. ALL EXPOSED STEEL, HOLLOW METAL DOORS AND FRAMES, AND LOUVERS TO BE PAINTED.
5. AT COVE BASE, PROVIDE CONTINUOUS 3/8" RADIUS
6. ALL FLOOR FINISHES SHALL BE STABLE, FIRM, & SLIP RESISTANT PER CBC SECTION 11B-302.1.
7. CARPET / CARPET TILE FLOORING SHALL BE SECURELY ATTACHED WITH FIRM BACKING AND PILE HEIGHT OF 1/2" MAX. PER CBC SECTION 11B-302.2. CARPET EDGES SHALL COMPLY WITH CBC SECTION 11B-303.
8. ALL FLOOR FINISHES SHALL EXTEND BELOW ACCESSIBLE WORK SURFACES, SINKS, ETC. FOR THE REQUIRED TOE/KNEE CLEARANCE.
9. REFER TO CORRESPONDING SPECIFICATIONS FOR BURNING CHARACTERISTICS AND TESTING REQ.
10. FOR FINISHED SCHEDULE, SEE **5/A1-1.1**

FINISH ABBREVIATIONS

ACP	ACOUSTICAL CEILING PANEL (SUSPENDED)
ACT	ACOUSTICAL CEILING TILE
AWP	ACOUSTIC WALL PANEL
CONC	CONCRETE
CPL	CEMENT PLASTER
CPT	CARPET
EPOXY	EPOXY FLOOR
EPT	EPOXY TERRAZZO
EXP	EXPOSED
FF	FACTORY FINISH
GPL	GYPSUM PLASTER
GWB	GYPSUM WALLBOARD
GWWB	WATER RESISTANT GWB
LVT	LUXURY VINYL TILE
OP	OPERABLE PARTITION
PES	PAINT - EGGSHELL
PL	PLASTIC LAMINATE
PF	PAINT, FLAT
PSG	PAINT, SEMI-GLOSS
RB	RUBBER BASE
RES	RESINOUS/EPOXY FLOORING
RF	RUBBER FLOORING
RS	ROLLER SHADE SYSTEM
S	SEAL
SEAL	SEALED
SSM	SOLID SURFACE MATERIAL
SV	SHEET VINYL
T	TILE
TWP	TACKABLE WALL PANEL
U.O.S.	UNDERSIDE OF STRUCTURE
VCT	VINYL COMPOSITION TILE
VF	VINYL FABRIC
WD	WOOD

FLOOR FINISH LEGEND

TILING
PT-1
T-1

CARPETING
CPT-1
CPT-2

XX OCCUPANCY
ASSISTIVE LISTENING SIGNAGE 15 AD-1.2
EXIT EXIT RAMP DOWN SIGN 7 AD-1.2
FE FIRE EXTINGUISHER 10 AD-1.2
ROOM NAME AND NUMBER 4 AD-1.2
ACCESSIBLE RESTROOM SIGNAGE 22 AD-1.2

NOTE:
REFER TO COLORS, MATERIALS AND FINISHES LEGEND FOR ADDITIONAL INFORMATION

NARANCA ES RELOCATABLE CLASSROOM BUILDINGS:

PROJECT No. :1-16-21
8/17/2026 5:18:09 PM

DRAWN BY:
DELTA # _____ DATE _____
DELTA # _____ DATE _____
DELTA # _____ DATE _____
DELTA # _____ DATE _____

CHECKED BY:
☐ ADD ☐ AFO ☐ CCD ☐ REV
☐ ADD ☐ AFO ☐ CCD ☐ REV
☐ ADD ☐ AFO ☐ CCD ☐ REV
☐ ADD ☐ AFO ☐ CCD ☐ REV

RUHNAUCLARKE.COM
3775 TENTH STREET, RIVERSIDE CALIFORNIA 92501 (951) 684 4664 / 5751 PALMER WAY, SUITE C, CARLSBAD CALIFORNIA 92010 (760) 438 5899

NARANCA ES RELOCATABLE CLASSROOM BUILDINGS
NARANCA ELEMENTARY SCHOL
1030 NARANCA AVE, EL CAJON, CA 92021
CAJON VALLEY UNION SCHOOL DISTRICT

24" X 40" RELO FLOOR PLAN

A1-1.1

1-16-21

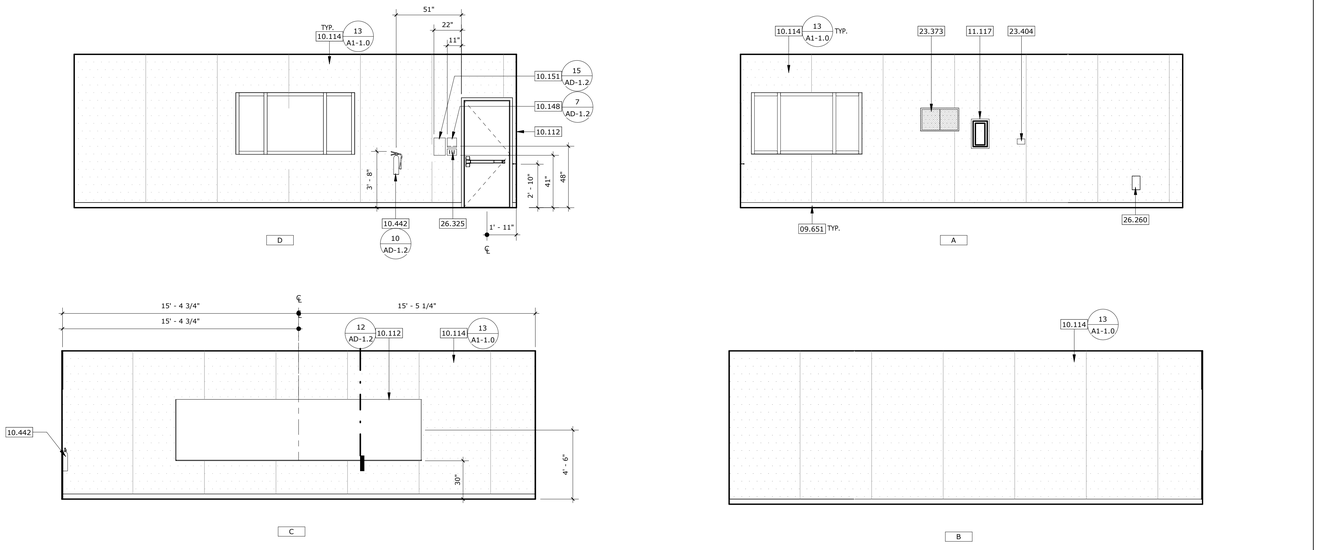

BLDG 27B & 27C INTERIOR ELEVATIONS

SCALE: 1/4" = 1'-0" | 3

PHASE 2

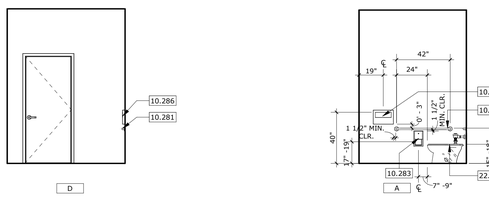

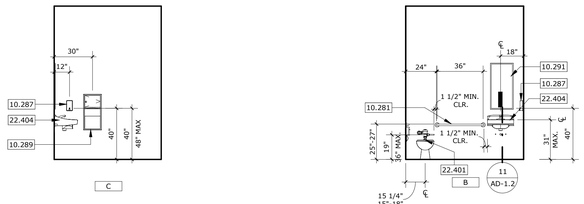

NOTE:
1. FOR MORE INFO., SEE DETAIL FOR AGE GROUP 9-12 (25 / AD-1.2)

RELO RESTROOM ELEVATIONS

SCALE: 1/4" = 1'-0" | 6

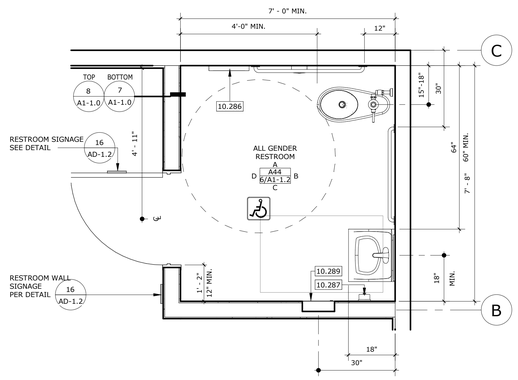

NOTE:
1. FOR MORE INFO., SEE DETAIL FOR AGE GROUP 9-12 (25 / AD-1.2)

RELO RESTROOM FLOOR PLAN

SCALE: 1/2" = 1'-0" | 4

NOTE:
FOR MORE INFORMATION ON FLOOR PLAN, INTERIOR & EXTERIOR ELEVATIONS, SEE PC SHEET **A1.0-N, A4.0-N** AND **A5.0-N** RESPECTIVELY AS PART OF THE PC DRAWINGS.

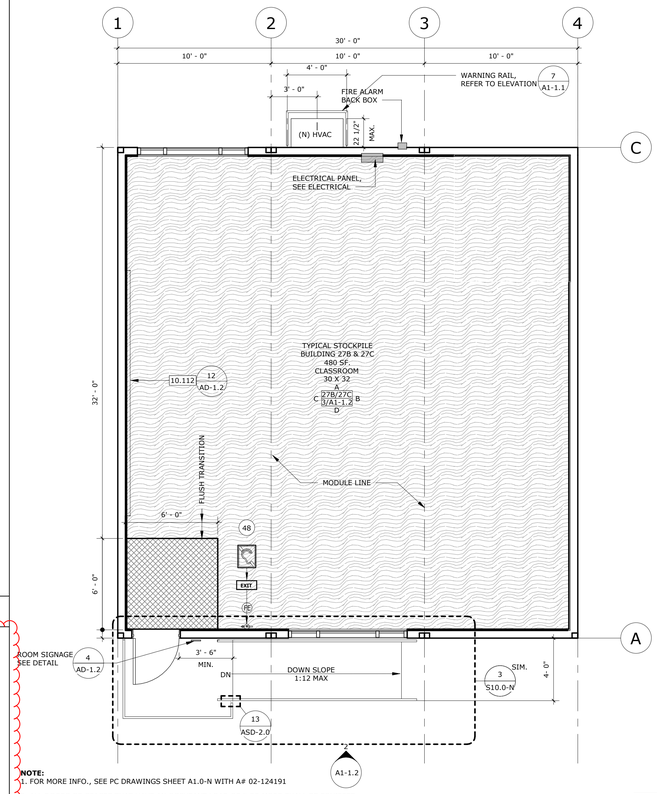

NOTE:
1. FOR MORE INFO., SEE PC DRAWINGS SHEET A1.0-N WITH A# 02-124191
2. ALL DOORS OR SPACES THAT HAVE AN OCCUPANT LOAD OF 5 OR MORE SHALL BE EQUIPPED WITH HARDWARE THAT IS LOCKABLE FROM THE INSIDE PER CBC SECTION 1010.2.2
3. WOOD FOUNDATION PER PC DRAWINGS

PORTABLE FLOOR PLAN - BLDG 27B & 27C

SCALE: 1/4" = 1'-0" | 1

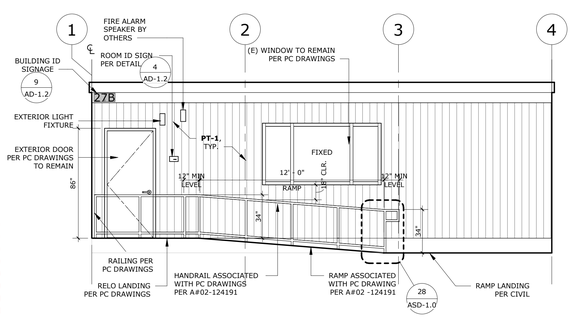

RELO FRONT ELEVATION

SCALE: 1/4" = 1'-0" | 2

NOTE:
SIGNAGE SHALL BE PROVIDED BY CONTRACTOR OR DISTRICT FOR CERTIFICATION. REFER TO PC (A# 02-124191) MODULAR BUILDING FLOOR PLANS ON SHEET, A1.0-N.

NEW A.L.S. CALCULATOINS

BUILDING	ROOM NAME	ROOM #	# OF OCC	# OF RECEIVERS REQUIRED = (# OF SEATS)(.4%)	# OF HEARING-AID COMATIBLE RECIEVERS = (# OF RECEIEVERES)(25%)	TOTAL # OF RECEIVERS PROVIDED
BLDG '27B'	CLASSROOM	28	22	(22 OCC)X(0.04%) = 0.88, 1 PROVIDED	(1 RECEIVERS)(0.25) = .25 0.5, 2 PROVIDED	2 H.A.C. REC.
BLDG '27C'	CLASSROOM	28	22	(22 OCC)X(0.04%) = 0.88, 1 PROVIDED	(1 RECEIVERS)(0.25) = .25 0.5, 2 PROVIDED	2 H.A.C. REC.
				TOTAL # OF RECEIVERS PROVIDED 4	2 MINIMUN HEARING AID COMPATIBLE RECEIEVER	

NOTES:
1. PER CBC SECTION 11B-219.3, THE MIN. # OF RECEIVERS TO BE PROVIDED SHALL BE EQUAL TO 4% OF TOTAL # OF OCCUPANTS, BUT IN NO CASE LESS THAN TWO. 25% MIN. OF RECEIVERS PROVIDED, BUT NO FEWER THAN TWO, SHALL BE HEARING-AID COMPATIBLE

AGENCY APPROVAL
File No: ######A#/04-125522

STAMPS

IDENTIFICATION STAMP
DIV. OF THE STATE ARCHITECT
APP: 04-125522 INC:
REVIEWED FOR
SS ☑ FLS ☑ ACS ☑
DATE: 08/19/2026

CONSULTANT BRANDING

RUHNAU CLARKE ARCHITECTS

GENERAL NOTES

1. VERIFY ALL DIMENSIONS PRIOR TO CONSTRUCTION.
2. ALL DIMENSIONS ARE TO FACE OF STUD, CENTERLINE OF COLUMN OR EDGE OF SLAB, U.N.O.
3. SIGNAGE AND ELEMENTS IDENTIFIED AS "BY OTHERS" OR "BY OWNER" TO BE PROVIDED PER A# 04-124199

KEYNOTES

09.651	RESILIENT BASE
10.112	CLASSROOM MARKERBOARD PER DETAIL 12/AD-1.2
10.114	TACKABLE WALL PANEL SYSTEM, PER ROOM FINISH SCHEDULE. REFER TO SPECIFICATIONS 10 11 00 FOR MORE INFO
10.148	EXIT RAMP DOWN SIGNAGE
10.151	ASSISTIVE LISTENING SYSTEM SIGNAGE
10.281	STAINLESS STEEL GRAB BAR, B.O.D. BOBRICK B-6806 SERIES, OR EQUAL
10.283	SURFACE MOUNTED TOILET PAPER DISPENSER, B.O.D. BOBRICK B-2888 SERIES, OR EQUAL
10.286	SURFACE MOUNTED TOILET SEAT COVER DISPENSER, B.O.D. BOBRICK B-1221 SERIES, OR EQUAL
10.287	SURFACE MOUNTED SOAP DISPENSER, B.O.D. BOBRICK B-2112 SERIES, OR EQUAL
10.289	RECESSED PAPER TOWEL DISPENSER & WASTE RECEPTACLE B.O.D. BOBRICK B-369 SERIES, OR EQUAL
10.291	STAINLESS STEEL MIRROR, B.O.D. BOBRICK B-165 1836 SERIES, OR EQUAL
10.442	WALL MOUNTED FIRE EXTINGUISHER, SEE DETAIL 10/AD-1.2
11.117	EXISTING ELECTRICAL PANEL
22.401	WATER CLOSET, B.O.D. AMERICAN STANDARD: MADERA FLOWISE 15" FLIUSHOMETER TOILET 3451.001, SLOAN ROYAL 111-1.28: BEMIS COMMERCIAL 195SSSCT, OR EQUAL
22.404	LAVATORY, B.O.D. AMERICAN STANDARD LUCERNE WALL HUNG LAVATORY: CHICAGO FAUSETS, METERING 333-EZ805-336CAB, OR EQUAL, SET METERING FAUSET FOR NO LESS THAN 10-SECONDS DURATIONS
23.373	EXISTING RETURN GRILLE PER MECHANICAL DRAWINGS
23.404	THERMOSTAT - TOP @ 46" A.F.F. - SEE ELECTRICAL SHEETS (SEE PC. DRAWINGS ON SHEET A1.0N & A1.0A PER A# 04-124204)
26.260	POWER DISTRIBUTION UNIT
26.325	EXISTING LIGHT SWITCH

FINISH NOTES

1. ALL FINISHES SHALL COMPLY WITH CBC CHAPTERS 3, 8, & 10, CFC AND CCR TITLE 19 AND STATE OF CALIFORNIA TECHNICAL BULLETIN 117-2013.
2. WALL AND CEILING MATERIALS SHALL NOT EXCEED THE FLAME SPREAD CLASSIFICATIONS IN CBC TABLE 803.13.
3. ALL ADJACENT DISSIMILAR FINISH MATERIALS TO RECEIVE BEAD OF CAULK, U.N.O.
4. ALL EXPOSED STEEL, HOLLOW METAL DOORS AND FRAMES, AND LOUVERS TO BE PAINTED.
5. AT COVE BASE, PROVIDE CONTINUOUS 3/8" RADIUS
6. ALL FLOOR FINISHES SHALL BE STABLE, FIRM, & SLIP RESISTANT PER CBC SECTION 11B-302.1.
7. CARPET / CARPET TILE FLOORING SHALL BE SECURELY ATTACHED WITH FIRM BACKING AND PILE HEIGHT OF 1/2" MAX. PER CBC SECTION 11B-302.2. CARPET EDGES SHALL COMPLY WITH CBC SECTION 11B-303.
8. ALL FLOOR FINISHES SHALL EXTEND BELOW ACCESSIBLE WORK SURFACES, SINKS, ETC. FOR THE REQUIRED TOE/KNEE CLEARANCE.
9. REFER TO CORRESPONDING SPECIFICATIONS FOR BURNING CHARACTERISTICS AND TESTING REQ.
10. FOR FINISHED SCHEDULE, SEE **5/A1-1.1**

FINISH ABBREVIATIONS

ACP	ACOUSTICAL CEILING PANEL (SUSPENDED)
ACT	ACOUSTICAL CEILING TILE
AWP	ACOUSTIC WALL PANEL
CONC	CONCRETE
CPL	CEMENT PLASTER
CPT	CARPET
EPOXY	EPOXY FLOOR
EPT	EPOXY TERRAZZO
EXP	EXPOSED
FF	FACTORY FINISH
GPL	GYPSUM PLASTER
GWB	GYPSUM WALLBOARD
GWWB	WATER RESISTANT GWB
LVT	LUXURY VINYL TILE
OP	OPERABLE PARTITION
PES	PAINT - EGGSHELL
PL	PLASTIC LAMINATE
PF	PAINT, FLAT
PSG	PAINT, SEMI-GLOSS
RB	RUBBER BASE
RES	RESINOUS/EPOXY FLOORING
RF	RUBBER FLOORING
RS	ROLLER SHADE SYSTEM
S	SEAL
SEAL	SEALED
SSM	SOLID SURFACE MATERIAL
SV	SHEET VINYL
T	TILE
TWP	TACKABLE WALL PANEL
U.O.S.	UNDERSIDE OF STRUCTURE
VCT	VINYL COMPOSITION TILE
VF	VINYL FABRIC
WD	WOOD

FLOOR FINISH LEGEND

TILING

PT-1

T-1

CARPETING

CPT-1

CPT-2

XX OCCUPANCY

ASSISTIVE LISTENING SIGNAGE (15 / AD-1.2)

EXIT RAMP DOWN SIGN (7 / AD-1.2)

FE FIRE EXTINGUISHER (10 / AD-1.2)

ROOM NAME AND NUMBER (4 / AD-1.2)

ACCESSIBLE RESTROOM SIGNAGE (22 / AD-1.2)

NOTE:
REFER TO COLORS, MATERIALS AND FINISHES LEGEND FOR ADDITIONAL INFORMATION

NARANCA ES RELOCATABLE CLASSROOM BUILDINGS:

PROJECT No. :1-16-21
8/17/2026 5:18:13 PM

DRAWN BY: CHECKED BY:
DELTA # ____ DATE ____ ADD AFO CCD REV
DELTA # ____ DATE ____ ADD AFO CCD REV
DELTA # ____ DATE ____ ADD AFO CCD REV
DELTA # ____ DATE ____ ADD AFO CCD REV

RUHNAUCLARKE.COM
3775 TENTH STREET, RIVERSIDE CALIFORNIA 92501 (951) 684 4664 / 5751 PALMER WAY, SUITE C, CARLSBAD CALIFORNIA 92010 (760) 438 5899

NARANCA ES RELOCATABLE CLASSROOM BUILDINGS
NARANCA ELEMENTARY SCHOL
1030 NARANCA AVE, EL CAJON, CA 92021
CAJON VALLEY UNION SCHOOL DISTRICT

30" X 32" RELO FLOOR PLAN

A1-1.2

1-16-21

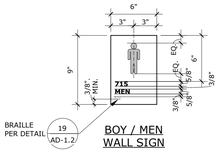

BOY / MEN WALL SIGN

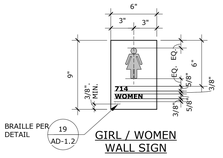

GIRL / WOMEN WALL SIGN

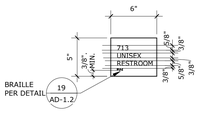

ALL GENDER WALL SIGN

(USE FOR ALL SINGLE -USER RESTROOMS)

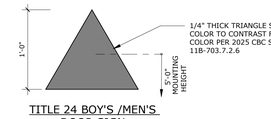

TITLE 24 BOY'S /MEN'S DOOR SIGN

1/4" THICK TRIANGLE SYMBOL, COLOR TO CONTRAST FROM DOOR COLOR PER 2025 CBC SECTION 11B-703.7.2.6

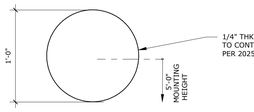

TITLE 24 GIRL'S /WOMEN'S DOOR SIGN

1/4" THK. CIRCLE SYMBOL, COLOR TO CONTRAST FROM DOOR COLOR PER 2025 CBC SEC. 11B-703.7.2.6

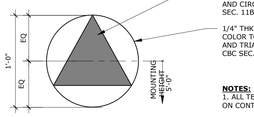

TITLE 24 ALL GENDER DOOR SIGN

(USE FOR ALL SINGLE -USER RESTROOMS)

1/4" THK. TRIANGLE SYMBOL, COLOR TO CONTRAST FROM DOOR AND CIRCLE COLOR PER 2025 CBC SEC. 11B-703.7.2.6

1/4" THK. CIRCLE SYMBOL, COLOR TO CONTRAST FROM DOOR AND TRIANGLE COLOR PER 2025 CBC SEC. 11B-703.7.2.6

NOTES:

1. ALL TEXT/GRAPHICS TO BE WHITE ON CONTRASTING BACKGROUND, TYP.

2. EDGES ON GEOMETRIC SYMBOLS SHALL BE EASED OR ROUNDED AT 1/16" MIN. OR CHAMFERED AT 1/8" MAX. VERTICES SHALL BE RADIUSED BETWEEN 1/8" MIN - 1/4" MAX.

3. RAISED CHARACTERS AT WALL SIGNS PER 11B-703.2

4. FOR MORE INFO. ON SIGN PLACEMENT, REFER TO DETAIL 16 AD-1.2

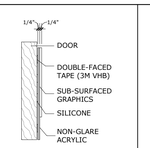

SIDE VIEW

RESTROOM SIGNS LOCATION — SCALE: 1/2" = 1'-0" — 16

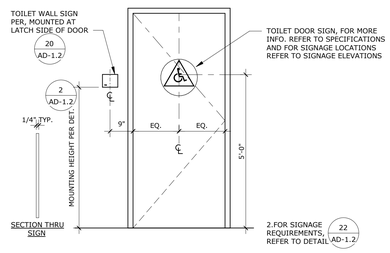

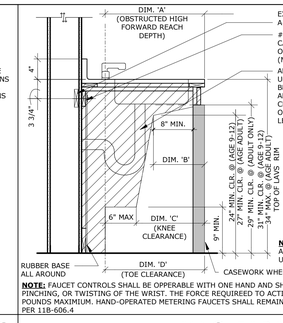

DIM. 'A'	DIM. 'B'	DIM. 'C'	'D' LAV
17"	8"	11"	17"
18"	9"	12"	18"
19"	10"	13"	19"

NOTE: THERE SHALL BE NO SHARP OR ABRASIVE OBJECTS OR SURFACES UNDER LAV

NOTE: FAUCET CONTROLS SHALL BE OPPERABLE WITH ONE HAND AND SHALL BOT REQUIRE TIGHT GRASPING, PINCHING, OR TWISTING OF THE WRIST. THE FORCE REQUIREED TO ACTIVAGTE OPERABLE PARTS SHALL BE 5 POUNDS MAXIMUM. HAND-OPERATED METERING FAUCETS SHALL REMAIN OPEN FOR 10 SECONDS MINIMUM PER 11B-606.4

LAV CLEARANCE — SCALE: 1" = 1'-0" — 11

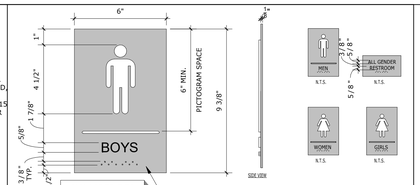

1/8" THICK NON-GLARE ACRYLIC. SUB-SURFACE PAINTED BACKGROUND COLOR TO BE CONFORMING TO FS. COLOR 15090 OF FED STD.595C

CALIFORNIA CONTRACTED GRADE 2 BRAILLE - RAISED 0.025"-0.037" MIN. W/ DOMED DOTS

5/8" MIN. - 2" MAX. UNIVERS 57 CONDENSED UPPERCASE TEXT OF CONTRASTING COLOR - RAISED 1/32" MIN. ROWMARK TEXT & GRAPHICS. COLOR WHITE (311-201)

SEE FLOOR PLAN FOR LOCATION. FOLLOW CBC 11B SECTIONS 703.1, 703.2, 703.3 & 703.5. AS REQUIRED.

SEE DETAIL 2/AD-1.2 FOR TYPICAL SIGNAGE MOUNTING HEIGHTS.

ACC. RESTROOM WALL SIGN — SCALE: 3" = 1'-0" — REF.: — 6

STAMPS

LICENSED ARCHITECT — ROGER CLARKE — C-18736 — AR-10-31-27 — STATE OF CALIFORNIA

AGENCY APPROVAL
File No.: ######A\##-125522

IDENTIFICATION STAMP
DIV. OF THE STATE ARCHITECT
APP: 04-125522 INC:
REVIEWED FOR
SS ☑ FLS ☑ ACS ☑
DATE: 08/19/2026

CONSULTANT BRANDING

RUHNAU CLARKE ARCHITECTS

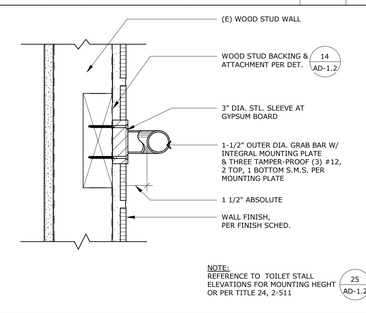

GRAB BAR ATTACHMENT — SCALE: 3" = 1'-0" — 17

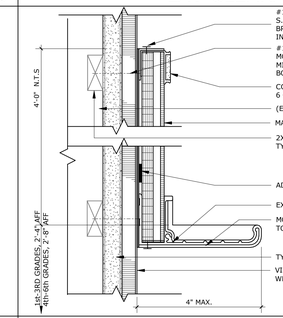

MARKERBOARD — SCALE: 6" = 1'-0" — 12

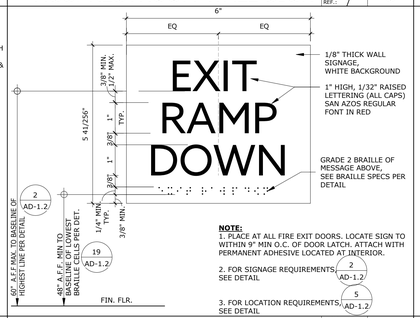

EXIT RAMP DOWN SIGN — SCALE: 6" = 1'-0" — 7

BRAILLE
FOR MORE INFO., SEE DETAIL 19 AD-1.2

CHARACTER TYPE
CHARACTERS ON SIGNS SHALL BE RAISED 1/32" MINIMUM AND SHALL BE SAN SERIF UPPERCASE CHARACTERS ACCOMPANIED BY CONTRACTED GRADE 2 BRAILLE

CHARACTER SIZE
RAISED CHARACTERS SHALL BE A MINIMUM OF 5/8" AND A MAXIMUM OF 2" HIGH.

FINISH AND CONTRAST
CONTRAST BETWEEN CHARACTERS, SYMBOLS , AND THEIR BACKGROUNDS MUST BE 70% MINIMUM AND HAVE A NON -GLARE FINISH

PROPORTIONS
VISUAL CHARACTERS ON SIGNS SHALL BE SELECTED FROM FONTS WHERE THE WIDTH OF THE UPPERCASE LETTER "O" IS 60 PERCENT MINIMUM AND 110 PERCENT MAXIMUM OF THE HEIGHT OF THE UPPERCASE LETTER "I" . STROKE THICKNESS OF THE UPPERCASE LETTER "I" SHALL BE 10 PERCENT MINIMUM AND 15 PERCENT MAXIMUM OF THE HEIGHT OF THE CHARACTER .

MOUNTING HEIGHT
SIGNS WITH RAISED CHARACTERS AND BRAILLE SHALL BE LOCATED 48" MINIMUM ABOVE THE FINISH FLOOR OR GROUND SURFACE ,MEASURED FROM THE BASELINE OF THE LOWEST LINE OF BRAILLE CELLS AND 60" MAXIMUM ABOVE THE FINISH FLOOR OR GROUND SURFACE, MEASURED FROM THE BASELINE OF THE HIGHEST LINE OF RAISED CHARACTERS.

EDGES & VERTICES ON GEOMETRIC SYMBOLS. 11B-703.7.2.6.4
EDGES SHALL BE EASED OR ROUNDED AT 1/16 INCH (1.59 MM) MIN. OR CHAMFERED AT 1/8 INCH (3.2 MM) MAX. VERTICES SHALL BE RADIUSED BETWEEN 1/8 INCH (3.2 MM) MIN & 1/4 INCH (6.4 MM) MAX.

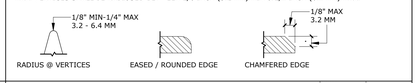

SIGNAGE REQUIREMENTS — SCALE: 1" = 1'-0" — 2

MOUNTING HEIGHTS

DIMENSIONS	ADULTS	PRE-KINDER AGES 3-4	KINDER AGES 5-8	ELEMENTARY AGES 9-12
TOILET OFFSET (CENTERLINE FROM WALL)	17 1/2"	12"	12"-15"	15"-18"
TOILET SEAT HEIGHT (TO TOP OF SEAT)	17"-19"	11"-12"	12"-15"	15"-17"
TOP OF GRAB BAR GRIPPING SURFACE	33"-36"	18"-20"	20"-25"	25"-27"
T.P. DISPENSER OUTLET (CENTERLINE OF OUTLET OR ROLL)	19" MIN.	14"	14"-17"	17"-19"
FURTHEST T.P. DISPENSER IN FRONT OF W.C (CENTERLINE OF ROLL)	7"-9"	7"-9"	7"-9"	7"-9"
LAVATORY/SINK RIM HEIGHT	34" MAX.	31" MAX.	31" MAX.	31" MAX.
LAVATORY/SINK KNEE CLEARANCE	27" MIN.(29"MIN FOR APRON AT LAVATORY)	PARALLEL APPROACH PERMITTED	AGES 6-8 29" MIN. AGE 5 PARALLEL APPROACH PERMITTED	24" MIN.
URINAL HEIGHT	17" MAX.	17" MAX.	17" MAX.	17" MAX.
URINAL PROJECTION	13 1/2" MIN.	13 1/2" MAX.	13 1/2" MAX.	13 1/2" MAX.
URINAL FLUSH CONTROL HEIGHT	44" MAX.	44" MAX.	44" MAX.	44" MAX.
HIGH DRINKING FOUNTAIN SPOUT HEIGHT	38"-43"	38"-43"	38"-43"	38"-43"
LOW DRINKING FOUNTAIN APPROACH,SPOUT HEIGHT,AND SPOUT LOCATION FROM FRONT EDGE OF THE UNIT INCLUDING BUMPERS	FRONT APPROACH PER 11B-306,36"MAX A.F.F. & 5" MAX FROM FRONT EDGE OF UNIT.	PARALLEL APPROACH IS PERMITTED IF SPOUT IS 30"MAX A.F.F &3 1/2" MAX FROM FRONT EDGE OF UNIT .	PARALLEL APPROACH IS PERMITTED IF SPOUT IS 30"MAX A.F.F &3 1/2" MAX FROM FRONT EDGE OF THE UNIT.	PARALLEL APPROACH IS PERMITTED IF SPOUT IS 30"MAX A.F.F &3 1/2" MAX FROM FRONT EDGE OF THE UNIT .
DRINKING FOUNTAIN OPERABLE PARTS	5" MAX FROM FRONT EDGE OF THE UNIT	6" MAX FROM FRONT EDGE OF THE UNIT	6" MAX FROM FRONT EDGE OF THE UNIT	6" MAX FROM FRONT EDGE OF THE UNIT
CANTILEVER DRINKING FOUNTAIN PROJECTION	18"-19"	18"-19"	18"-19"	18"-19"
TOE CLEARANCE AT TOILET PARTITION	9" MIN.	12" MIN.	12" MIN.	12" MIN.
SHELF HEIGHT	40"-48"	40"-48"	40"-48"	44" MAX.
MIRROR HEIGHT(BOTTOM EDGE OF REFLECTING SURFACE)	40" MAX(ABOVE LAV OR COUNTERTOP) 35" MIN.(ABOVE LAV OR COUNTERTOP)	40" MAX(ABOVE LAV OR COUNTERTOP) 35" MIN.(ABOVE LAV OR COUNTERTOP)	40" MAX(ABOVE LAV OR COUNTERTOP) 35" MIN.(ABOVE LAV OR COUNTERTOP)	40" MAX(ABOVE LAV OR COUNTERTOP) 35" MIN.(ABOVE LAV OR COUNTERTOP)
MIRROR HEIGHT(BOTTOM EDGE OF REFLECTING SURFACE) IN DRESSING, FITTING &LOCKER ROOMS	20" MAX.	20" MAX.	20" MAX.	20" MAX.
RESTROOM DISPENSER & OTHER ACCESSORIES(HEIGHT OF ALL OPERABLE PARTS)	40" MAX.	40" MAX.	40" MAX.	40" MAX.

NOTE:
1. ALL HEIGHT DIMENSIONS ARE A.F.F.(OR A.F.G. FOR EXTERIOR). ALL HORIZONTAL DIMENSIONS ARE TO FACE FINISH.

2. CONTRACTOR TO PROVIDE MOUNTING HEIGHTS INDICATED,VERIFY INTENDED USE OF EACH RESTROOM PRIOR TO ROUGH IN.PROVIDE BACKING PER STRUCTURAL DRAWING AS REQUIRED. THE PROJECTION FROM A SURFACE OR SEMI-RECESSED FIXTURE FROM THE FACE OF THE WALL OR PARTITION SHALL BE LIMITED TO 3" AND NO CLOSER THAN 1-1/2" TO THE TANGENT POINT OF GRAB BAR.

3. ALL INFO. HEREIN ARE FOR REFERENCE ONLY

ACCESSORIES & EQUIP. KEYNOTES

ACCESSORIES

1. 18"WX30"H TEMPERED GLASS MIRROR
2. SEMI-RECESSED COMBO PAPER TOWEL DISPENSER AND WASTE RECEPTACLE (4" MAX PROJECTION)
3. RECESSED ELECTRIC HAND DRYER (4" MAX PROJECTION)
4. SURFACE MOUNTED TOILET SEAT COVER DISPENSER
5. SURFACE MOUNTED TOILET TISSUE DISPENSER. 4" MAX PROJECTION.
6. NOT USED
7. SURFACE MOUNTED LIQUID SOAP DISPENSER. 4" MAX PROJECTION. 6" A.F.F (OVER OBSTRUCTION). 4" MAX PROJECTION
8. GRAB BARS (SIDE=42" L,R1-1/2" DIA., REAR=36"L,X1-1/2" DIA.)
9. SURFACE MOUNTED FEMININE NAPKIN DISPOSAL(WOMENS ONLY). 4" MAX PROJECTION.
10. STAINLESS STEEL MIRROR

EQUIPMENT

11. ACCESSIBLE LAVATORY
12. NON-ACCESSIBLE WATER CLOSET.
13. NON-ACCESSIBLE URINAL.
14. TOILET PARTITION.
15. URINAL SCREEN.
16. ACCESSIBLE WATER CLOSET.
17. ACCESSIBLE URINAL.

MECHANICAL/PLUMBING

18. INSULATE DRAIN AND SUPPLY PIPING TO PREVENT CONTACT. THERE SHALL BE NO SHARP OR ABRASIVE SURFACES UNDER LAVATORY. PER CBC 2025 SEC. 11B-606.5

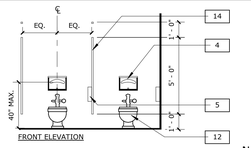

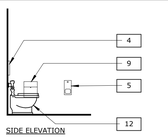

NON-ACCESSIBLE TOILET ROOM STALL

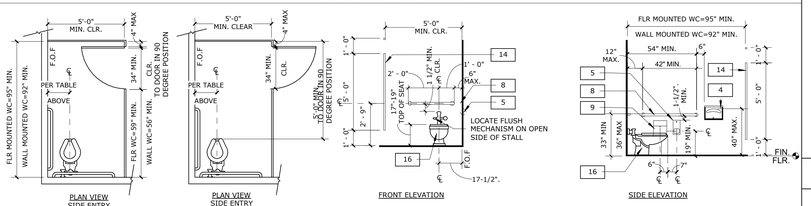

ACCESSIBLE TOILET ROOM STALL (ADULT DIMS)

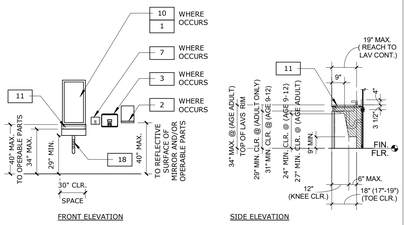

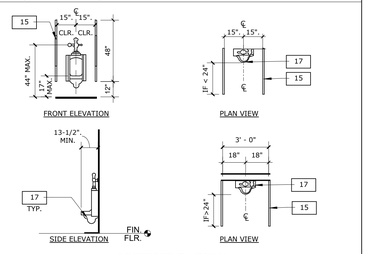

ACCESSIBLE URINAL

RESTROOM FIXTURES AND ACCESSORY CLEARANCE — SCALE: 1/4" = 1'-0" — 25

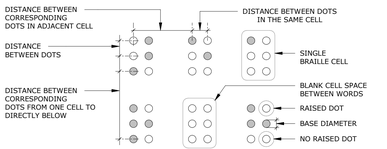

MEASUREMENT RANGE	MINIMUM IN INCHES/MAXIMUM IN INCHES
DOT BASE DIAMETER	0.059 (1.5 MM) TO 0.063 (1.6 MM)
DISTANCE BETWEEN TWO DOTS IN THE SAME CELL [1]	0.100 (2.5 MM)
DISTANCE BETWEEN CORRESPONDING DOTS IN ADJACENT CELL [1]	0.300 (7.6 MM)
DOT HEIGHT	0.025 (0.6 MM) TO 0.037 (0.9 MM)
DISTANCE BETWEEN CORRESPONDING DOTS FROM ONE CELL DIRECTLY BELOW [1]	0.395 (10 MM) TO 0.400 (10.2 MM)

1. MEASURED CENTER TO CENTER

BRAILLE:
11B-703.3 BRAILLE SHALL BE CONTRACTED (GRADE 2) AND SHALL COMPLY WITH SECTION 11B-703.3 AND 11B-703.4

11B-703.3.1 DIMENSION AND CAPITALIZATION. BRAILLE DOT SHALL HAVE A DOMED OR ROUNDED SHAPE AND SHALL COMPLY WITH TABLE 11B-703.3.1. THE INDICATOR OF AN UPPERCASE LETTER OR LETTERS SHALL ONLY BE USED BEFORE THE FIRST WORD OF SENTENCES, PROPER NOUNS AND NAMES, INDIVIDUAL LETTERS OF THE ALPHABET, NITIALS AND ACRONYMS.

11B-703.3.2 POSITION. BRAILLE SHALL BE POSITION BELOW THE CORRESPONDING TEXT IN HORIZONTAL FORMAT, FLUSH LEFT OR CENTERED. IF TEXT IS MULTI-LINED, BRAILLE SHALL BE PLACED BELOW THE ENTIRE TEXT. BRAILLE SHALL BE SEPERATED 3/8 INCH (9.5 MM) MINIMUM AND 1 1/2 INCH (12.7 MM) MAXIMUM FROM ANY OTHER TACTILE CHARACTERS AND 3/8 INCH (9.5 MM) MINIMUM FROM RAISED BORDERS AND DECORATIVE ELEMENTS.

BRAILLE REQUIREMENTS — SCALE: 1" = 1'-0" — 19

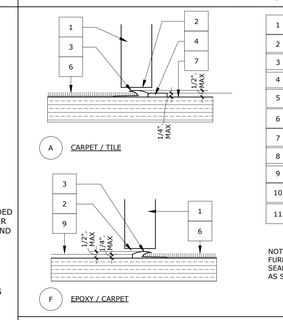

1. DOOR WHERE OCCURS
2. 1:2 MAX BEVEL @ TOP 1/4"
3. MERCER IMPERIAL REDUCER
4. REDUCER PER MNFR.
5. NO TRANSITION, FLUSH
6. CARPET
7. TILE
8. LUXURY VINYL TILE
9. RESINOUS EPOXY FLOORING
10. STATIC DISSIPATIVE TILE
11. FLOOR FOUNDATION

NOTE:
FURNISH & INSTALL DOOR SEALS OR WEATHER STRIPPING AS SPECIFIED.

FLOOR TRANSITIONS — SCALE: 3" = 1'-0" — 13

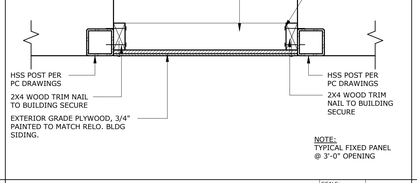

CLOSURE PANEL — SCALE: 1 1/2" = 1'-0" — 8

HEIGHT TO FIN. FLOOR OR GROUND FROM BASELINE OF CHARACTER	HORIZONTAL VIEWING DISTANCE	MINIMUM CHARACTER HEIGHT
40" TO ≤ 70"	< 72"	5/8"
	72" & >	5/8" + 1/8" PER FOOT OF VIEWING DISTANCE ABV. 72"
> 70" TO ≤ 120"	< 180"	2"
	180" & >	2" + 1/8" PER FOOT OF VIEWING DISTANCE ABV. 180"
> 120"	< 21'	3"
	21' & >	3" + 1/8" PER FOOT OF VIEWING DISTANCE ABV. 21'

NOTE: VIEWING DISTANCE SHALL BE MEASURED AS THE HORIZONTAL DISTANCE BETWEEN THE CHARACTER AND AN OBSTRUCTION PREVENTING FURTHER APPROACH TOWARDS THE SIGN. CHARACTER HEIGHT SHALL BE BASED ON THE UPPERCASE LETTER "I"

VISUAL CHARACTER HEIGHT — SCALE: 1" = 1'-0" — 3

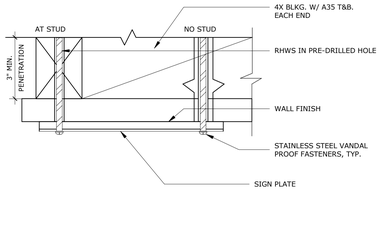

SIGN ATTACH. FRAMED WALL — SCALE: 3" = 1'-0" — 20

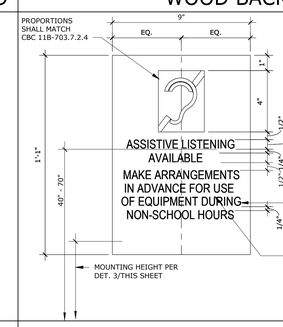

NOTES

1. PROVIDE ONE SIGN WHERE INDICATED ON PLAN

2. SIGN MATERIAL TO BE 1/8" THICK PROVIDE MECH. MOUNTING W/ VANDEL RESISTANT FASTENERS

3. PROVIDE 2 PORTABLE DEVICES PER ROOM OR 4% OF SEATING CAPACITY.

4. LETTERS TO BE WHITE ON CONTRASTING BACKGROUND

ASSISTIVE LISTENING SIGN — SCALE: 3" = 1'-0" — 15

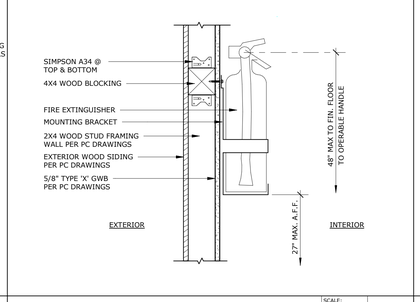

WALL MTD FIRE EXTINGUISHER — SCALE: 1 1/2" = 1'-0" — 10

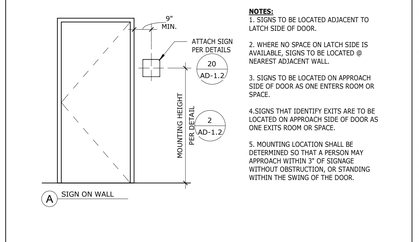

NOTES:
1. SIGNS TO BE LOCATED ADJACENT TO LATCH SIDE OF DOOR.

2. WHERE NO SPACE ON LATCH SIDE IS AVAILABLE, SIGNS TO BE LOCATED @ NEAREST ADJACENT WALL.

3. SIGNS TO BE LOCATED ON APPROACH SIDE OF DOOR AS ONE ENTERS ROOM OR SPACE.

4.SIGNS THAT IDENTIFY EXITS ARE TO BE LOCATED ON APPROACH SIDE OF DOOR AS ONE EXITS ROOM OR SPACE.

5. MOUNTING LOCATION SHALL BE DETERMINED SO THAT A PERSON MAY APPROACH WITHIN 3" OF SIGNAGE WITHOUT OBSTRUCTION, OR STANDING WITHIN THE SWING OF THE DOOR.

DOOR SIGN PLACEMENT — SCALE: 3/8" = 1'-0" — 5

NARANCA ES RELOCATABLE CLASSROOM BUILDINGS:

PROJECT No. :1-16-21
8/17/2026 5:18:17 PM

DRAWN BY:
DELTA # _____ DATE _____
DELTA # _____ DATE _____
DELTA # _____ DATE _____
DELTA # _____ DATE _____

CHECKED BY:
ADD ☐ AFO ☐ CCD ☐ REV
ADD ☐ AFO ☐ CCD ☐ REV
ADD ☐ AFO ☐ CCD ☐ REV
ADD ☐ AFO ☐ CCD ☐ REV

RUHNAUCLARKE.COM
3775 TENTH STREET, RIVERSIDE CALIFORNIA 92501 (951) 684 4664 / 5751 PALMER WAY, SUITE C, CARLSBAD CALIFORNIA 92010 (760) 438 5899

NARANCA ES RELOCATABLE CLASSROOM BUILDINGS
NARANCA ELEMENTARY SCHOL
1030 NARANCA AVE, EL CAJON, CA 92021
CAJON VALLEY UNION SCHOOL DISTRICT

DETAILS
ACCESSIBILITY & MISC. DETAILS

AD-1.2

ABBREVIATIONS

A	AMPERE (AMPS)
AC	ALTERNATING CURRENT
AF	AMPS-FRAME (RATING)
AIC	AMP INTERRUPTING CURRENT
AM	AMMETER
AS	AMP SWITCH (FUSED SWITCH RATING)
AT	AMPS-TRIP (RATING)
AWG	AMERICAN WIRE GAUGE
BC	BARE COPPER
BLDG	BUILDING
C	CONDUIT
CB	CIRCUIT BREAKER
CO	CONDUIT ONLY
CT	CURRENT TRANSFORMER
CU	COPPER
CFOI	CONTRACTOR FURNISHED OWNER INSTALLED
CFCI	CONTRACTOR FURNISHED CONTRACTOR INSTALLED
DPDT	DOUBLE POLE DOUBLE THROW
DPST	DOUBLE POLE SINGLE THROW
DWG	DRAWING
EX	EXISTING
FLA	FULL LOAD AMPS
FVR	FULL VOLTAGE REVERSING
FVNR	FULL VOLTAGE NON-REVERSING
GFI	GROUND FAULT INTERRUPTER
GRD/GND	GROUND
HID	HIGH INTENSITY DISCHARGE
HOA	HAND-OFF-AUTOMATIC
HP	HORSEPOWER
HPS	HIGH PRESSURE SODIUM
HZ	HERTZ
KW	KILOWATT
LCL	LONG CONTINUOUS LOAD
LRA	LOCKED ROTOR AMPS
LTG	LIGHTING
MCC	MOTOR CONTROL CENTER
MCM (KCM)	THOUSAND CIRCULAR MILS
MECH	MECHANICAL
NC	NORMALLY CLOSED
NF	NON-FUSED
NO	NORMALLY OPEN/NUMBER
OFCI	OWNER FURNISHED CONTRACTOR INSTALLED
OFOI	OWNER FURNISHED OWNER INSTALLED
P	POLE
PH	PHASE
POC	POINT OF CONNECTION
RGS	RVC COATED RIGID STEEL (CONDUIT)
PT	POTENTIAL TRANSFORMER
PVC	POLYVINYL CHLORIDE DUCT
SWBD	SWITCHBOARD
TYP	TYPICAL
UG	UNDERGROUND
UON	UNLESS OTHERWISE NOTED
V	VOLT
VA	VOLTAMPERES
VM	VOLTMETER
VL	VERIFY LOCATION
W	WIRE/WATTS
WP	WEATHERPROOF (NEMA TYPE 3R)
WT	WATERTIGHT
XP	EXPLOSION PROOF (RATED FOR AREA HAZARD)

ELECTRICAL SYMBOL LEGEND

POWER CONTINUED

	DUPLEX RECEPTACLE, WALL MOUNTED, +18" A.F.F. (U.O.N.)
HORZ.	RECEPTACLE, WALL MOUNTED HORIZONTALLY, +18" A.F.F. (U.O.N.)
	FOURPLEX RECEPTACLE, WALL MOUNTED, +18" A.F.F. (U.O.N.)
	RECEPTACLE MOUNTED +6" ABOVE COUNTER BACKSPLASH SEE ARCHITECTURAL PLANS FOR REQUIRED MOUNTING HEIGHT PRIOR TO ROUGH-IN.
LCD	PROVIDE (2) DUPLEX RECEPTACLE CEILING MOUNTED LOCATE ADJACENT TO PROJECTOR. FIELD VERIFY EXACT LOCATION PRIOR TO ROUGH-IN.
GFI	DUPLEX GROUND FAULT INTERRUPTING RECEPTACLE +18" A.F.F. (U.O.N.)
WP	DUPLEX RECEPTACLE IN WEATHERPROOF ENCLOSURE +18" A.F.F. (U.O.N.)
WP/L	DUPLEX RECEPTACLE IN WEATHERPROOF "LOCKING" ENCLOSURE +18" A.F.F. (U.O.N.) (SEE TYPICAL DETAILS E3 SERIES SHEETS AND SPECIFICATIONS FOR REQUIRED TYPE).
	DUPLEX COMPUTER RECEPTACLE (GREY), WALL MOUNTED +18" A.F.F. (U.O.N.)
	DUPLEX COMPUTER RECEPTACLE (BLUE) ISOLATED GROUND, SURGE SUPPRESSION, WALL MOUNTED +18" A.F.F. (U.O.N.)
A	SINGLE RECEPTACLE 30 AMP, 250V, 4W, GROUNDING, WALL MOUNTED +18" A.F.F. (U.O.N.). FIELD VERIFY EXACT OUTLET CONFIGURATION WITH EQUIPMENT PRIOR TO ROUGH-IN.
	CONDUIT AND WIRE, CONCEALED IN CEILING OR WALL
	CONDUIT AND WIRE, CONCEALED IN OR UNDER FINISHED FLOOR OR UNDER FINISHED GRADE.
	FLEXIBLE CONDUIT CONNECTION
	BRANCH CIRCUIT HOMERUN TO PANEL. SLASHES INDICATE NUMBER OF CONDUCTORS. EQUIPMENT GROUND WIRE NOT INDICATED U.O.N. #12 CONDUCTORS ARE MINIMUM, NO HASH MARKS = MIN (2) #12
	3/4" CONDUIT STUBBED FROM DEVICE TO ABOVE ACCESSIBLE CEILING
#8	BRANCH CIRCUIT HOMERUN, NUMBER INDICATES INCREASED CONDUCTOR SIZE, CONDUCTORS SHALL REMAIN AS INDICATED FOR SIZE THROUGHOUT THE ENTIRE CIRCUIT.
	PANELBOARD, SURFACE MOUNTED.
	PANELBOARD, RECESSED
T	STEP-DOWN TRANSFORMER
	DISTRIBUTION SWITCHBOARD

GENERAL PROJECT NOTES:

1. UNLESS WHERE OTHERWISE NOTED, ALL WORK INDICATED ON THESE DRAWINGS SHALL BE CONSIDERED NEW WORK.
2. UNLESS WHERE OTHERWISE NOTED, ALL DIMENSIONS ARE TO BE CENTERLINE OF THE DEVICE.
3. "GENERAL NOTES" SHOWN ON AN INDIVIDUAL DRAWING APPLY TO ALL WORK SHOWN ON THAT SHEET. "KEY NOTES" ONLY APPLY TO SPECIFIC ITEMS WHERE ANNOTATED AT SPECIFIC LOCATIONS. SOME KEY NOTES MAY NOT APPLY TO ANY SPECIFIC ITEMS.
4. UNLESS SPECIFICALLY SHOWN ON THESE PLANS, NO STRUCTURAL MEMBER SHALL BE CUT, NEITHER DRILLED NOR NOTCHED WITHOUT PRIOR WRITTEN AUTHORIZATION FROM THE STRUCTURAL ENGINEER AND THE DIVISION OF THE STATE ARCHITECT.

MEP COMPONENT ANCHORAGE NOTE:

ALL MECHANICAL, PLUMBING, AND ELECTRICAL COMPONENTS SHALL BE ANCHORED AND INSTALLED PER THE DETAILS ON THE DSA-APPROVED CONSTRUCTION DOCUMENTS. THE FOLLOWING COMPONENTS SHALL BE ANCHORED OR BRACED TO MEET THE FORCE AND DISPLACEMENT REQUIREMENTS PRESCRIBED IN THE 2025 CBC SECTIONS 1617A.1.18 THROUGH 1617A.1.26 AND ASCE 7-16 CHAPTERS 13, 26, AND 30:

1. ALL PERMANENT EQUIPMENT AND COMPONENTS.
2. TEMPORARY, MOVABLE OR MOBILE EQUIPMENT THAT IS PERMANENTLY ATTACHED (E.G., HARD WIRED) TO THE BUILDING UTILITY SERVICES SUCH AS ELECTRICITY, GAS OR WATER. "PERMANENTLY ATTACHED" SHALL INCLUDE ALL ELECTRICAL CONNECTIONS EXCEPT PLUGS FOR 110/220 VOLT RECEPTACLES HAVING A FLEXIBLE CABLE.
3. TEMPORARY, MOVABLE OR MOBILE EQUIPMENT WHICH IS HEAVIER THAN 400 POUNDS OR HAS A CENTER OF MASS LOCATED 4 FEET OR MORE ABOVE THE ADJACENT FLOOR OR ROOF LEVEL THAT DIRECTLY SUPPORT THE COMPONENT IS REQUIRED TO BE RESTRAINED IN A MANNER APPROVED BY DSA.

THE FOLLOWING MECHANICAL AND ELECTRICAL COMPONENTS SHALL BE POSITIVELY ATTACHED TO THE STRUCTURE BUT NEED NOT DEMONSTRATE DESIGN COMPLIANCE WITH THE REFERENCES NOTED ABOVE. THESE COMPONENTS SHALL HAVE FLEXIBLE CONNECTIONS PROVIDED BETWEEN THE COMPONENT AND ASSOCIATED DUCTWORK, PIPING, AND CONDUIT. FLEXIBLE CONNECTIONS MUST ALLOW MOVEMENT IN BOTH TRANSVERSE AND LONGITUDINAL DIRECTIONS:

A. COMPONENTS WEIGHING LESS THAN 400 POUNDS AND HAVING A CENTER OF MASS LOCATED 4 FEET OR LESS ABOVE THE ADJACENT FLOOR OR ROOF LEVEL THAT DIRECTLY SUPPORT THE COMPONENT.
B. COMPONENTS WEIGHING LESS THAN 20 POUNDS, OR IN THE CASE OF DISTRIBUTED SYSTEMS, LESS THAN 5 POUNDS PER FOOT, WHICH ARE SUSPENDED FROM A ROOF OR FLOOR OR HUNG FROM A WALL.

THE ANCHORAGE OF ALL MECHANICAL, ELECTRICAL AND PLUMBING COMPONENTS SHALL BE SUBJECT TO THE APPROVAL OF THE DESIGN PROFESSIONAL IN GENERAL RESPONSIBLE CHARGE OR STRUCTURAL ENGINEER DELEGATED RESPONSIBILITY AND ACCEPTANCE BY DSA. THE PROJECT INSPECTOR WILL VERIFY THAT ALL COMPONENTS AND EQUIPMENT HAVE BEEN ANCHORED IN ACCORDANCE WITH THE ABOVE REQUIREMENTS.

MEP DISTRIBUTION SYSTEM BRACING NOTE FOR PIPING, DUCTWORK AND ELECTRICAL CONDUIT

PIPING, DUCTWORK, AND ELECTRICAL DISTRIBUTION SYSTEMS SHALL BE BRACED TO COMPLY WITH THE FORCES AND DISPLACEMENTS PRESCRIBED IN ASCE 7 SECTION 13.3 AS DEFINED IN ASCE 7 SECTIONS 13.6.5, 13.6.6, 13.6.7, AND 13.6.8: AND 2025 CBC SECTIONS 1617A.1.24, 1617A.1.25, AND 1617A.1.26.

THE METHOD OF SHOWING BRACING AND ATTACHMENTS TO THE STRUCTURE FOR THE IDENTIFIED DISTRIBUTION SYSTEMS ARE AS NOTED BELOW. THE MEP DESIGN PROFESSIONAL ENGINEER RESPONSIBLE FOR CONTENT ON THESE SHEETS HAS VERIFIED THAT THE DESIGN METHODS IDENTIFIED BELOW ARE IN ACCORDANCE WITH DSA IR 16-13.

MECHANICAL PIPING (MP), MECHANICAL DUCTS (MD), PLUMBING PIPING (PP), ELECTRICAL DISTRIBUTION SYSTEMS (E):

MP ☐ MD ☐ PP ☐ E ☒ OPTION 1: PROJECT-SPECIFIC DESIGN.

MP ☐ MD ☐ PP ☐ E ☐ OPTION 2: DESIGN BASED ON OSHPD OPM, WITHIN PROJECT SUBMITTAL.

MP ☐ MD ☐ PP ☐ E ☐ OPTION 3: DESIGN BASED ON OSHPD OPM, DEFERRED SUBMITTAL.

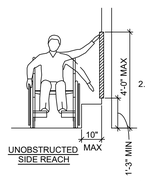

UNOBSTRUCTED SIDE REACH

1. UNOBSTRUCTED : WHERE A CLEAR FLOOR OR GROUND SPACE ALLOWS A PARALLEL APPROACH TO AN ELEMENT AND THE SIDE REACH IS UNOBSTRUCTED, THE HIGH SIDE REACH SHALL BE 48 INCHES MAX AND THE LOW SIDE REACH SHALL BE 15 INCHES MIN ABOVE FINISH FLOOR OR GROUND.
   A. EXCEPTION: AN OBSTRUCTION SHALL BE PERMITTED BETWEEN THE CLEAR FLOOR OR GROUND SPACE AND THE ELEMENT WHERE THE DEPTH OF THE OBSTRUCTION IS 10 INCHES MAX
2. OBSTRUCTED HIGH REACH : WHERE A CLEAR FLOOR OR GROUND SPACE ALLOWS A PARALLEL APPROACH TO AN ELEMENT AND THE HIGH SIDE REACH IS OVER AN OBSTRUCTION, THE HEIGHT OF THE OBSTRUCTION SHALL BE 34 INCHES MAX AND THE DEPTH OF THE OBSTRUCTION SHALL BE 24 INCHES MAX THE HIGH SIDE REACH SHALL BE 48 INCHES MAX FOR A REACH DEPTH OF 10 INCHES MAX WHERE THE REACH DEPTH EXCEEDS 10 INCHES, THE HIGH SIDE REACH SHALL BE 46 INCHES MAX FOR A REACH DEPTH OF 24 INCHES MAX
3. OPERATION : OPERABLE PARTS SHALL BE OPERABLE WITH ONE HAND AND SHALL NOT REQUIRE TIGHT GRASPING, PINCHING, OR TWISTING OF THE WRIST. THE FORCE REQUIRED TO ACTIVATE OPERABLE PARTS SHALL BE 5 POUNDS MAX

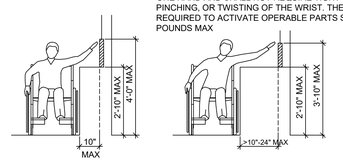

OBSTRUCTED HIGH SIDE REACH

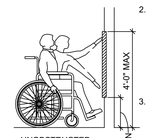

UNOBSTRUCTED FORWARD REACH

1. UNOBSTRUCTED : WHERE A FORWARD REACH IS UNOBSTRUCTED, THE HIGH FORWARD REACH SHALL BE 48 INCHES MAX AND THE LOW FORWARD REACH SHALL BE 15 INCHES MIN ABOVE FINISH FLOOR OR GROUND.
2. OBSTRUCTED HIGH REACH : WHERE A CLEAR FLOOR OR GROUND SPACE ALLOWS A FORWARD REACH IS OVER AN OBSTRUCTION, THE CLEAR SPACE SHALL EXTEND BENEATH THE ELEMENT FOR A DISTANCE NOT LESS THAN THE REQUIRED REACH DEPTH OVER THE BOSTRUCTION AND THE DEPTH OF THE OBSTRUCTION SHALL BE 25 INCHES MAX THE HIGH FORWARD REACH SHALL BE 48 INCHES MAX FOR A REACH DEPTH OF 20 INCHES, THE HIGH FORWARD REACH SHALL BE 44 INCHES MAX FOR A DEPTH OF 25 INCHES MAX
3. OPERATION : OPERABLE PARTS SHALL BE OPERABLE WITH ONE HAND AND SHALL NOT REQUIRE TIGHT GRASPING, PINCHING, OR TWISTING OF THE WRIST. THE FORCE REQUIRED TO ACTIVATE OPERABLE PARTS SHALL BE 5 POUNDS MAX

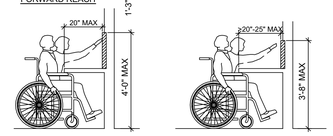

OBSTRUCTED HIGH FORWARD REACH

MOUNTING HEIGHT - SIDE AND FORWARD REACH RANGE

NO SCALE

1 / E1.0

STAMPS

#26047 7/22/2026

AGENCY APPROVAL
File No: ########-#######

IDENTIFICATION STAMP
DIV. OF THE STATE ARCHITECT
APP: 04-125522 INC:
REVIEWED FOR
SS ☑ FLS ☑ ACS ☑
DATE: 08/19/2026

JOHNSON CONSULTING ENGINEERS, INC.
Power | Lighting | Multimedia
Communications | Data Networking
12875 Brookprinter Place, Suite 300
Poway, CA 92064
P 858.679.4030 | F 858.513.0559
www.jce-inc.com

CONSULTANT BRANDING

RUHNAU CLARKE ARCHITECTS

RELOCATABLE CLASSROOM BUILDINGS:

PROJECT No. :
5/22/2026 9:39:41 AM

DRAWN BY: CHECKED BY:
DELTA # ____ DATE ____ ☐ ADD ☐ AFO ☐ CCD ☐ REV
DELTA # ____ DATE ____ ☐ ADD ☐ AFO ☐ CCD ☐ REV
DELTA # ____ DATE ____ ☐ ADD ☐ AFO ☐ CCD ☐ REV
DELTA # ____ DATE ____ ☐ ADD ☐ AFO ☐ CCD ☐ REV

RUHNAUCLARKE.COM

3775 TENTH STREET, RIVERSIDE CALIFORNIA 92501 (951) 684 4664 / 5751 PALMER WAY, SUITE C, CARLSBAD CALIFORNIA 92010 (760) 438 5899 / 801 16TH STREET SACRAMENTO, CA 95814 (916) 379 8111

RELOCATABLE CLASSROOM BUILDINGS
1030 NARANCA AVE, EL CAJON, CA 92021
CAJON VALLEY UNION SCHOOL DISTRICT

ELECTRICAL LEGEND AND NOTES

E1.0

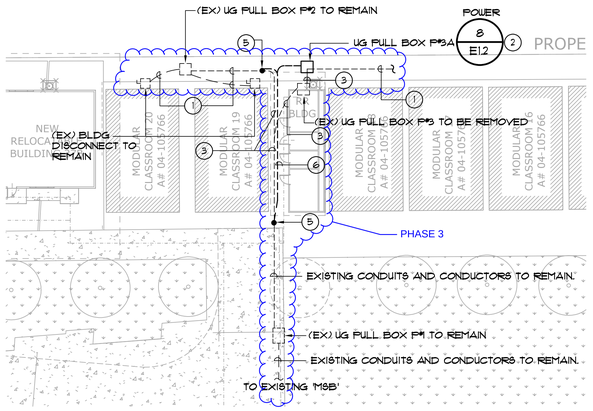

ENLARGED SITE PLAN - POWER

SCALE: 1" = 20'-0" | 2

ALL EXISTING CABLES SHALL BE RE-TERMINATED AND TESTED. FIELD VERIFY DEVICES AND EQUIPMENT WHERE ALL EXISTING CABLES ARE TERMINATED.

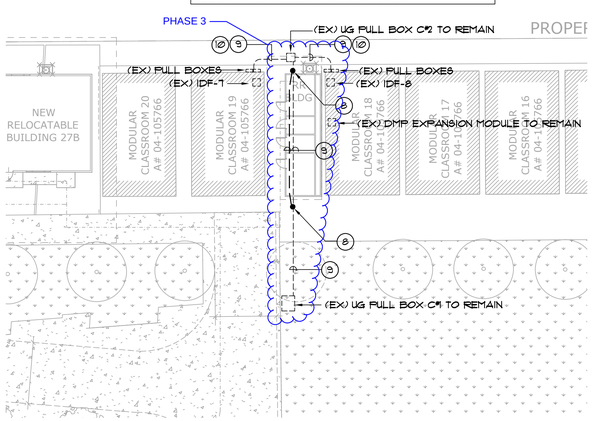

ENLARGED SITE PLAN - COMM. AND FIRE ALARM

SCALE: 1" = 20'-0" | 3

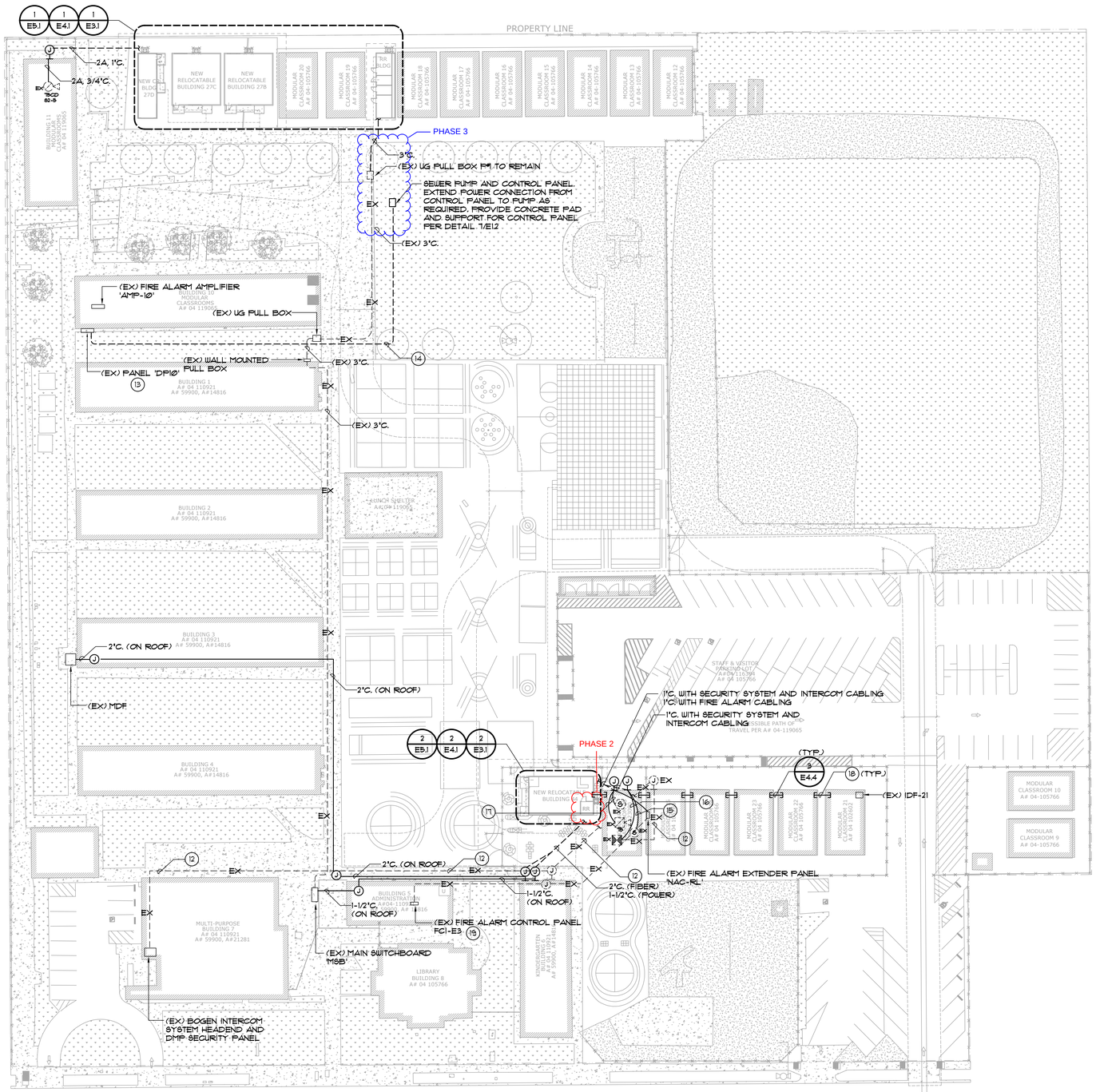

OVERALL SITE PLAN

SCALE: 1" = 30'-0" | 1

GENERAL NOTES:

1. ALL JUNCTION BOXES SHOWN ON FLOOR PLAN SHALL BE NEMA 3R UNLESS OTHERWISE NOTED.
2. REFER TO E1.2 FOR TYPICAL SITE DETAILS.
3. REFER TO 3/E3.1 ONE LINE DIAGRAM FOR POWER FEEDER SIZE.
4. REFER TO 2/E4.2 DATA NETWORKING RISER DIAGRAM FOR COMMUNICATIONS CABLING REQUIREMENT.
5. REFER TO 5/E4.3 SECURITY SYSTEM RISER DIAGRAM FOR SECURITY SYSTEM CABLING REQUIREMENT.
6. REFER TO 1/E5.3 FIRE ALARM RISER DIAGRAM FOR FIRE ALARM CABLING REQUIREMENT.

KEY NOTES:

1. EXISTING CONDUIT AND CONDUCTORS TO REMAIN.
2. INTERCEPT EXISTING CONDUIT AND CONDUCTORS IN THIS BOX.
3. PULL BACK EXISTING CONDUCTORS TO UG PULL BOX P#1. EXISTING CONDUIT TO BE REMOVED.
4. PULL BACK EXISTING CONDUCTORS TO UG PULL BOX P#1.
5. INTERCEPT EXISTING CONDUITS AND CONDUCTORS AND RE-ROUTE TO UG PULL BOX P#1 AND P#3A. FIELD VERIFY EXACT POINT OF INTERCEPTION
6. 3"C. 4 #4/0, 1 #4 GND. (RELO 19,20) 3"C. 4 #4/0, 1 #4 GND. (RELO 12-18)
7. REMOVE EXISTING COMM. AND FIRE ALARM CONDUCTORS BACK TO UG PULL BOX C#1.
8. INTERCEPT EXISTING CONDUITS AND RE-ROUTE TO UG PULL BOX C#1 AND C#2. FIELD VERIFY EXACT POINT OF INTERCEPTION.
9. EXISTING CONDUCTORS SHALL BE REMOVED BACK TO C#1 AND RE-PULLED VIA EXISTING AND NEW CONDUITS. NEW CONDUITS SHALL MATCH EXISTING CONDUIT QUANTITY AND SIZE.
10. EXISTING CONDUITS TO REMAIN.
11. EXISTING INTERCOM HEADEND - BOGEN MULTICOM 2000 AND MAIN DMP SECURITY PANEL.
12. PULL IN NEW SECURITY CABLING FROM MAIN SECURITY PANEL VIA EXISTING CONDUIT. PULL BACK EXISTING CABLING AND PULL IN NEW CABLING WITH EXISTING AS REQUIRED.
13. PROVIDE (1) 30A/2P BREAKER IN EXISTING SPACE.
14. 1"C. 3 #6, 1 #6 GND.
15. 1"C. WITH INTERCOM CABLING
16. 1"C. WITH SECURITY SYSTEM CABLING
17. 1"C. WITH FIRE ALARM CABLING
18. (2) 2"C.
19. UPGRADE EXISTING PANEL TO PROVIDE VOICE EVAC. PROVIDE VOICE GATEWAY AND AMPLIFIER.

RELOCATABLE CLASSROOM BUILDINGS:

STAMPS: #26047 8/18/2026

AGENCY APPROVAL
File No: ########--#######

IDENTIFICATION STAMP
DIV. OF THE STATE ARCHITECT
APP: 04-125522 INC:
REVIEWED FOR
SS ☑ FLS ☑ ACS ☑
DATE: 08/19/2026

JOHNSON CONSULTING ENGINEERS, INC.
Power | Lighting | Multimedia
Communications | Data Networking
12875 Brookprinter Place, Suite 300
Poway, CA 92064
P 858.679.4030 | F 858.513.0559
www.jce-inc.com

CONSULTANT BRANDING

RUHNAU CLARKE ARCHITECTS

PROJECT No. :
5/22/2026 9:39:41 AM

DRAWN BY: CHECKED BY:
DELTA # ____ DATE ____ ADD AFO CCD REV
DELTA # ____ DATE ____ ADD AFO CCD REV
DELTA # ____ DATE ____ ADD AFO CCD REV
DELTA # ____ DATE ____ ADD AFO CCD REV

RELOCATABLE CLASSROOM BUILDINGS
1030 NARANCA AVE, EL CAJON, CA 92021
CAJON VALLEY UNION SCHOOL DISTRICT

OVERALL SITE PLAN | E1.1

AGENCY APPROVAL
File No: ########-#######

STAMPS *16047 7/22/2026

IDENTIFICATION STAMP
DIV. OF THE STATE ARCHITECT
APP: 04-125522 INC:
REVIEWED FOR
SS ☑ FLS ☑ ACS ☑
DATE: 08/19/2026

JOHNSON CONSULTING ENGINEERS, INC.
Power | Lighting | Multimedia
Communications | Data Networking
12875 Brookprinter Place, Suite 300
Poway, CA 92064
P 858.679.4030 | F 858.513.0559
www.jce-inc.com

CONSULTANT BRANDING

RUHNAU CLARKE ARCHITECTS

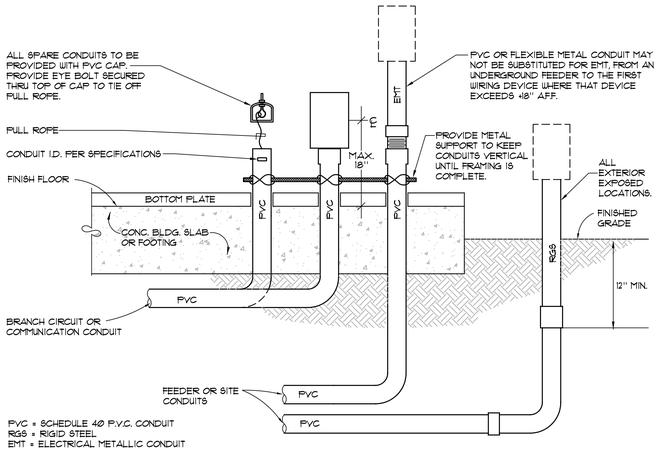

PVC = SCHEDULE 40 P.V.C. CONDUIT
RGS = RIGID STEEL
EMT = ELECTRICAL METALLIC CONDUIT

TYPICAL CONDUIT DETAIL

NO SCALE

DET-E13 — 1 / E-1.2

THE EXTENT THAT PEDESTRIAN SURFACES ARE TRENCHED AND PATCHED, THE PATCH SHALL COMPLY WITH CBC §11B-302.1 AND §11B-303.

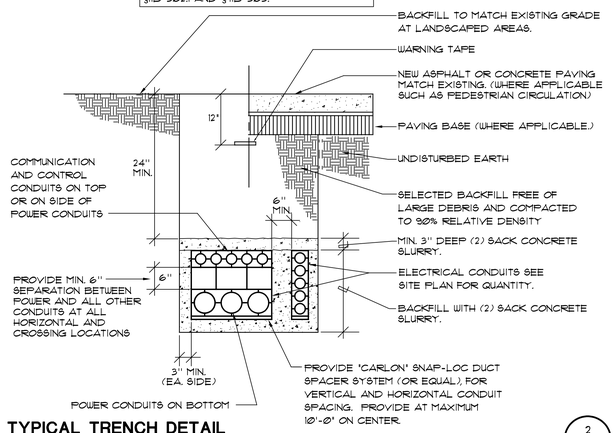

TYPICAL TRENCH DETAIL

NO SCALE

2 / E-1.2

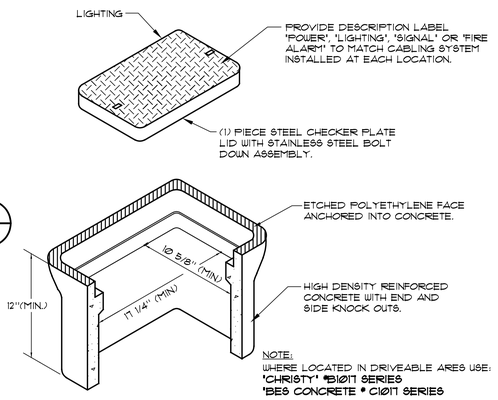

NOTE:
WHERE LOCATED IN DRIVEABLE AREA USE:
'CHRISTY' #B1017 SERIES
'BES CONCRETE' • C1017 SERIES

ALL OTHER AREAS USE:
'CHRISTY' #N9 SERIES
'BES CONCRETE' • C9E SERIES

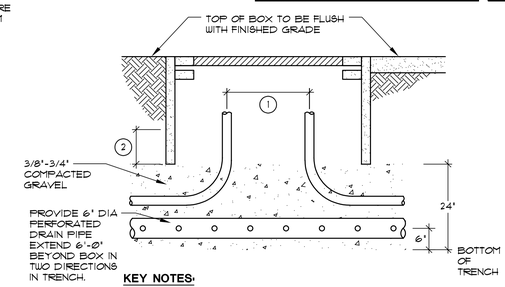

KEY NOTES:

1. WHERE CONDUITS SERVE INCOMING AND OUTGOING CIRCUITS KEEP RISERS SEPARATED INSIDE PULLBOX TO ALLOW FOR BLACK CONDUCTORS.
2. TOPS OF CONDUITS MUST NOT EXTEND INTO PULLBOX MORE THAN 1/3 OF THE TOTAL AVAILABLE INSIDE BOX HEIGHT. IN ORDER TO ALLOW ADEQUATE SPACE FOR CABLE BLACK.

UNDERGROUND PULLBOX STYLE 'A'

NO SCALE

DET-H — 3 / E1.2

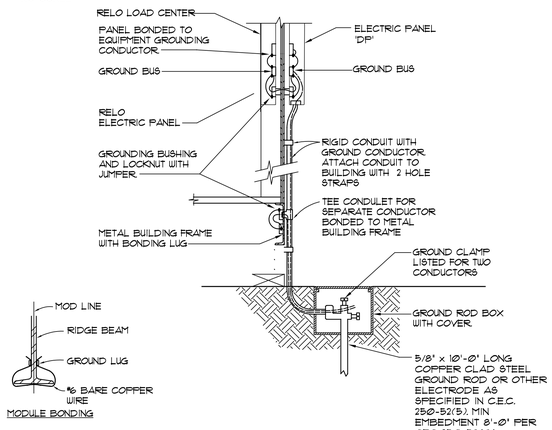

GENERAL NOTE:

1. SIZE OF CONDUCTOR SHALL COMPLY WITH C.E.C. TABLE 250-66.
2. BOND SEPARATE CONDUCTORS FROM GROUND ROD TO ELECTRICAL PANEL (250-52(5)) AND TO METAL BUILDING FRAME (C.E.C. 250-104(C)). IN ADDITION TO THE DETAIL ABOVE BOND THE ELECTRICAL GROUND TO METAL WATER PIPE IF AVAILABLE. (C.E.C. 250-104(A)).
3. ALL MODULES OF METAL FRAME BUILDINGS AND RAMP SHALL BE ELECTRICALLY BONDED TOGETHER (BOLTING ONLY IS NOT ACCEPTABLE BONDING).
4. CHECK RESISTANCE TO GROUND. IF RESISTANCE EXCEEDS 25 OHMS, EXTEND CONDUCTORS, AS REQUIRED TO ADDITIONAL GROUND RODS AS NEEDED, SEPARATED BY AT LEAST 6'-0" UNTIL RESISTANCE IS 25 OHM OR LESS (CEC 250.53(A)(2)(3)).

RELOCATABLE CLASSROOM GROUNDING DETAIL #2

NO SCALE

4 / E-1.2

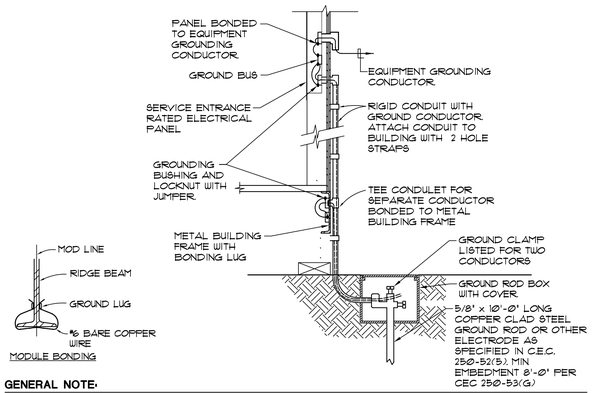

GENERAL NOTE:

1. SIZE OF CONDUCTOR SHALL COMPLY WITH C.E.C. TABLE 250-66.
2. BOND SEPARATE CONDUCTORS FROM GROUND ROD TO ELECTRICAL PANEL (250-52(5)) AND TO METAL BUILDING FRAME (C.E.C. 250-104(C)). IN ADDITION TO THE DETAIL ABOVE BOND THE ELECTRICAL GROUND TO METAL WATER PIPE IF AVAILABLE. (C.E.C. 250-104(A)).
3. ALL MODULES OF METAL FRAME BUILDINGS AND RAMP SHALL BE ELECTRICALLY BONDED TOGETHER (BOLTING ONLY IS NOT ACCEPTABLE BONDING).
4. CHECK RESISTANCE TO GROUND. IF RESISTANCE EXCEEDS 25 OHMS, EXTEND CONDUCTORS, AS REQUIRED TO ADDITIONAL GROUND RODS AS NEEDED, SEPARATED BY AT LEAST 6'-0" UNTIL RESISTANCE IS 25 OHM OR LESS (CEC 250.53(A)(2)(3)).

RELOCATABLE CLASSROOM GROUNDING DETAIL

NO SCALE

DET-G02 12166 CCD — 5 / E-1.2

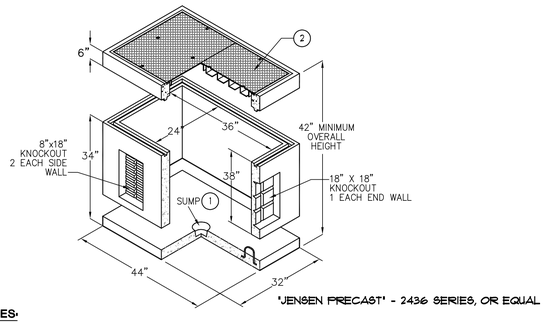

'JENSEN PRECAST' - 2436 SERIES, OR EQUAL

KEY NOTES:

1. 12"x12" SUMP (FIELD KNOCKOUT BOTTOM) AND FILL WITH GRAVEL TO DRAIN.
2. H-20 RATED STEEL COVER.

GENERAL INSTALLATION REQUIREMENTS:

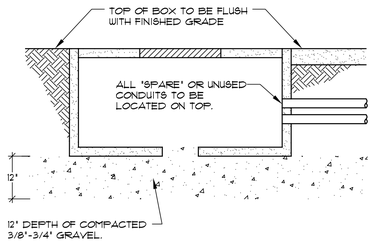

1. HANDHOLES SHALL BE PROVIDE WITH A MINIMUM OF (4) GALVANIZED PULLING PLATES IN BOTTOM OF PULLBOX.
2. PULLBOXES SHALL BE PROVIDED WITH CAST IN PLACE VERTICAL CABLE RACKS. ALL CABLES SHALL BE NEATLY BUNDLED, ORGANIZED AND SUPPORTED BY CABLE RACKS.
3. WHERE ADDITIONAL CONDUIT ENTRIES ARE REQUIRED BEYOND QUANTITY OF TERMINATORS SHOWN. CONTRACTOR SHALL FIELD CORE DRILL AS REQUIRED. WHERE 4" TERMINATORS ARE PROVIDED CONTRACTOR SHALL PROVIDE CONDUIT REDUCERS TO MATCH SITE CONDUIT SIZE REQUIREMENTS.
4. FOR ALTERNATE STYLE PULLBOXES CONTRACTOR SHALL FIELD CORE DRILL ALL CONDUIT ENTRIES 2" DIA AND SMALLER.

UNDERGROUND PULLBOX STYLE 'F'

NO SCALE

8 / E1.2

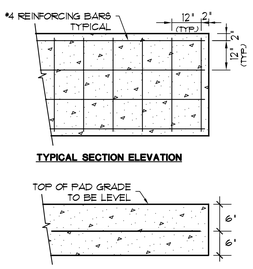

GENERAL NOTES

1. ALL CONCRETE SHALL ATTAIN A MINIMUM COMPRESSIVE STRENGTH OF 3000 PSI AT 28 DAYS. BATCH PLANT INSPECTIONS AND TESTS OF CEMENT AND REINFORCING BARS MAY BE WAIVED PER TITLE 24 SECTION 1705A3.3.1.
2. CONCRETE MIX DESIGNS SHALL COMPLY WITH TITLE 24 SECTION 1904A.
3. PORTLAND CEMENT SHALL CONFORM TO (ASTM C-150) TYPE I OR II
4. CONCRETE AGGREGATES SHALL CONFORM TO ASTM C-33
5. CONCRETE PLACEMENT SHALL CONFORM TO ACI 318-19 SECTION 26.5.2.
6. ALL REINFORCING BARS SHALL CONFORM TO TITLE 24 SECTION 1903A AND ASTM A-615 GRADE 60.

TYPICAL HOUSEKEEPING PAD DETAIL

NO SCALE

DET-A02 — 6 / E1.2

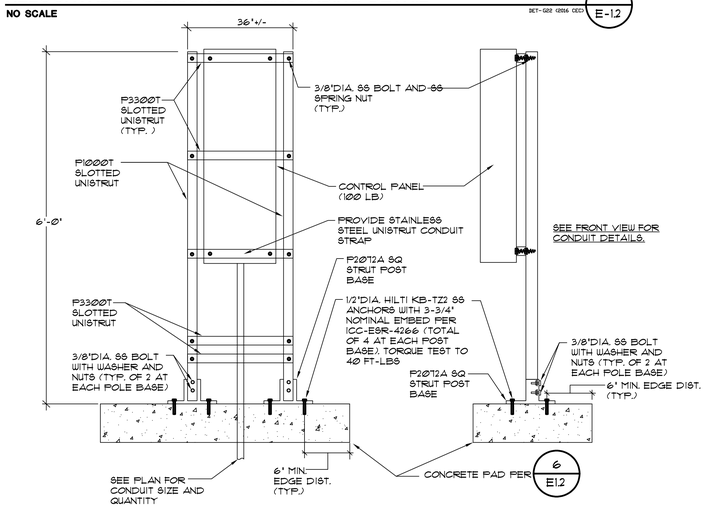

DISCONNECT SWITCH SUPPORT DETAIL

NO SCALE

7 / E1.2

RELOCATABLE CLASSROOM BUILDINGS:

PROJECT No. :
5/22/2026 9:39:41 AM

DRAWN BY: CHECKED BY:
DELTA # ____ DATE ____ ADD AFO CCD REV
DELTA # ____ DATE ____ ADD AFO CCD REV
DELTA # ____ DATE ____ ADD AFO CCD REV
DELTA # ____ DATE ____ ADD AFO CCD REV

RELOCATABLE CLASSROOM BUILDINGS
1030 NARANCA AVE, EL CAJON, CA 92021
CAJON VALLEY UNION SCHOOL DISTRICT

ELECTRICAL DETAILS

E1.2

STATE OF CALIFORNIA
Electrical Power Distribution
CALIFORNIA ENERGY COMMISSION

CERTIFICATE OF COMPLIANCE **NRCC-ELC-E**

This document is used to demonstrate compliance with mandatory requirements in §130.5, for electrical systems in newly constructed nonresidential and hotel/motel occupancies and §160.6 and §160.9 for electrical systems in newly constructed multifamily occupancies. Additions and alterations to electrical service systems in nonresidential and hotel/motel occupancies will also use this document to demonstrate compliance per §141.0(a) or §141.0(b)2F for alterations. For multifamily addition or alterations compliance will be documented per §180.1(a) or §180.2 (b)4Biv.*

Project Name:	NARANCA ES RELOS	**Report Page:**	**(Page 1 of 4)**
Project Address:		**Date Prepared:**	2026-06-08T15:56:20-04:00

A. GENERAL INFORMATION

01	Project Location (city)	EL CAJON	02 Climate Zone	10
			03 Occupancy Types Within Project:	

● School or Classroom

B. PROJECT SCOPE

This table includes electrical systems that are within the scope of the permit application.

01	02	03	04	05	06	07
Electrical Service Designation/ Description	Scope of Work [1]	Rating[2] (kVA)	Utility Provided Metering System Exception to §130.5(a)/§160.6(a)[3]	System subject to CA Elec Code Article 517 Exception to §130.5(a)and (b)	Demand Response Controls	Provides power to dwelling units/common living areas only in multifamily occupancy
MSB	Add/Alt to feeders and branch circuits only	---	☐	☐	Where required, demand response controls must be specified which are capable of receiving and automatically responding to at least one standards based messaging protocol which enables demand response after receiving a demand response signal. Sections §120.2(jj)§160.3, §130.1(f)§160.5, and §130.3(f)§160.5, and mechanical, indoor lighting, and sign lighting Certificate of Compliance documents will indicate when demand response controls are required.	☐

FOOTNOTES: Adding only new feeders and branch circuits triggers Voltage Drop 130.5(c)/160.6(c), no other requirements from 130.5/160.6 are required.
** If common use areas in a multifamily are submetered, rating is for submeter size serving common use areas.*
[3] Applicable if the utility company is providing a metering system that indicates instantaneous kW demand and kWh for a utility-defined period.

STATE OF CALIFORNIA
Electrical Power Distribution
CALIFORNIA ENERGY COMMISSION

CERTIFICATE OF COMPLIANCE **NRCC-ELC-E**

Project Name:	NARANCA ES RELOS	**Report Page:**	**(Page 2 of 4)**
		Date Prepared:	2026-06-08T15:56:20-04:00

C. COMPLIANCE RESULTS

Results in this table are automatically calculated from data input and calculations in Tables F through I. Note: if any cell on this table says "COMPLIES with Exceptional Conditions" refer to Table D. Exceptional Conditions for guidance or see applicable Table referenced below.

01		02		03		04	05	06
Service Electrical Metering §130.5(a)/ §160.6(a) (See Table F)	AND	Separation for Monitoring §130.5(b)/ §160.6(b) (See Table G)	AND	Voltage Drop §130.5(c)/ §160.6(c) (See Table H)	AND	Controlled Receptacles §130.5(d)/ §160.6(d) (See Table I)	Electric Ready §160.9 (See Table J)	**Compliance Results**
	AND		AND	Yes	AND			COMPLIES

D. EXCEPTIONAL CONDITIONS

This table is auto-filled with uneditable comments because of selections made or data entered in tables throughout the form.

E. ADDITIONAL REMARKS

This table includes remarks made by the permit applicant to the Authority Having Jurisdiction.

H. VOLTAGE DROP

This table includes entirely new or complete replacement electrical power distribution systems, or alterations that add, modify or replace both feeders and branch circuits to demonstrate compliance with §130.5(c)/ §160.6(c). For alterations, only the altered circuits must demonstrate compliance per §141.0(b)2F(i)/ §180.2(b)4Biv.

01	02			03	04	05	
Electrical Service Designation/Description	Combined Voltage Drop on Installed Feeder/Branch Circuit Conductors Compliance Method			Location of Voltage Drop Calculations[1]	Sheet Number for Voltage Drop Calculations in Construction Documents	Field Inspector	
						Pass	Fail
MSB	0[1]	Voltage drop less than 5%	☐	Permitted by CA Elec Code (Exception to 130.5(c))* Contractor Responsible		☐	☐

** NOTES: If "Permitted by CA Elec Code *" is selected under Compliance Method above, please indicate where the exception applies in the space provided below.*

[1] FOOTNOTES: Voltage drop calculations may be attached to the permit application outside the construction documents if followed by the Authority Having Jurisdiction. Select "attached" if applicable. If calculations will be the responsibility of the installing contractor, select "Contractor Responsible".

STATE OF CALIFORNIA
Electrical Power Distribution
CALIFORNIA ENERGY COMMISSION

CERTIFICATE OF COMPLIANCE **NRCC-ELC-E**

Project Name:	NARANCA ES RELOS	**Report Page:**	**(Page 3 of 4)**
		Date Prepared:	2026-06-08T15:56:20-04:00

K. DECLARATION OF REQUIRED CERTIFICATES OF INSTALLATION

Selections have been made based on information provided in this document. If any selection have been changed by permit applicant, an explanation should be included in Table E. Additional Remarks. These documents must be provided to the building inspector during construction and can be found online.

Form/Title

NRCI-ELC-E - Must be submitted for all buildings

L. DECLARATION OF REQUIRED CERTIFICATES OF ACCEPTANCE

There are no NRCA forms required for this project.

STATE OF CALIFORNIA
Electrical Power Distribution
CALIFORNIA ENERGY COMMISSION

CERTIFICATE OF COMPLIANCE **NRCC-ELC-E**

Project Name:	NARANCA ES RELOS	**Report Page:**	**(Page 4 of 4)**
Project Address:		**Date Prepared:**	2026-06-08T15:56:20-04:00

DOCUMENTATION AUTHOR'S DECLARATION STATEMENT

I certify that this Certificate of Compliance documentation is accurate and complete.

Documentation Author Name:	MONICA HANSEN	Documentation Author Signature:	
Company:	JOHNSON CONSULTING ENGINEERS	Signature Date:	6/8/26
Address:	12875 BROOKPRINTER PL, SUITE 300	CEA/HERS/CEC Certification Identification (if applicable):	
City/State/Zip:	POWAY,CA 92064	Phone:	858-679-4030

RESPONSIBLE PERSON'S DECLARATION STATEMENT

I certify the following under penalty of perjury, under the laws of The State of California:

1. The information provided on this Certificate of Compliance is true and correct.
2. I am eligible under Division 3 of the Business and Professions Code to accept responsibility for the building design or system design identified on this Certificate of Compliance (responsible designer)
3. The energy features and performance specifications, materials, components, and manufactured devices for the building design or system design identified on this Certificate of Compliance conform to the requirements of Title 24, Part 1 and Part 6 of the California Code of Regulations.
4. The building design features or system design features identified on this Certificate of Compliance are consistent with the information provided on other applicable compliance documents, worksheets, calculations, plans and specifications submitted to the enforcement agency for approval with this building permit application.
5. I will ensure that a completed signed copy of this Certificate of Compliance shall be made available with the building permit(s) issued for the building, and made available to the enforcement agency for all applicable inspections. I understand that a completed signed copy of this Certificate of Compliance is required to be included with the documentation the builder provides to the building owner at occupancy.

Responsible Person Name:	MONICA HANSEN	Responsible Person Signature:	
Responsible Person Scope:			
Company:	JOHNSON CONSULTING ENGINEERS	Date Signed:	6/8/26
Address:	12875 BROOKPRINTER PL, SUITE 300	License:	E 14781
City/State/Zip:	POWAY,CA 92064	Phone:	858-679-4030

MONICA HANSEN No. E 14781 Exp. 6-30-2027 ELECTRICAL STATE OF CALIFORNIA
*26047 6/8/2026

LICENSED ARCHITECT ROGER CLARKE No. 26047 Exp. 10-31-27 STATE OF CALIFORNIA

STAMPS

AGENCY APPROVAL
File No.: ########-#######

IDENTIFICATION STAMP
DIV. OF THE STATE ARCHITECT
APP: 04-125522 INC:
REVIEWED FOR
SS ☑ FLS ☑ ACS ☑
DATE: 08/19/2026

JOHNSON CONSULTING ENGINEERS, INC.
Power | Lighting | Multimedia
Communications | Data Networking
12875 Brookprinter Place, Suite 300
Poway, CA 92064
P 858.679.4030 | F 858.513.0559
www.jce-inc.com

CONSULTANT BRANDING

RUHNAU CLARKE ARCHITECTS

RELOCATABLE CLASSROOM BUILDINGS:

PROJECT No. :
5/22/2026 9:39:41 AM

DRAWN BY: CHECKED BY:
DELTA # _____ DATE _____ ☐ ADD ☐ AFO ☐ CCD ☐ REV
DELTA # _____ DATE _____ ☐ ADD ☐ AFO ☐ CCD ☐ REV
DELTA # _____ DATE _____ ☐ ADD ☐ AFO ☐ CCD ☐ REV
DELTA # _____ DATE _____ ☐ ADD ☐ AFO ☐ CCD ☐ REV

RUHNAUCLARKE.COM
3775 TENTH STREET, RIVERSIDE CALIFORNIA 92501 (951) 684 4664 / 5751 PALMER WAY, SUITE C, CARLSBAD CALIFORNIA 92008 (760) 438 5899 / 801 16TH STREET SACRAMENTO, CA 95814 (916) 379 8111

RELOCATABLE CLASSROOM BUILDINGS
1030 NARANCA AVE, EL CAJON, CA 92021
CAJON VALLEY UNION SCHOOL DISTRICT

TITLE 24 FORMS

E2.0

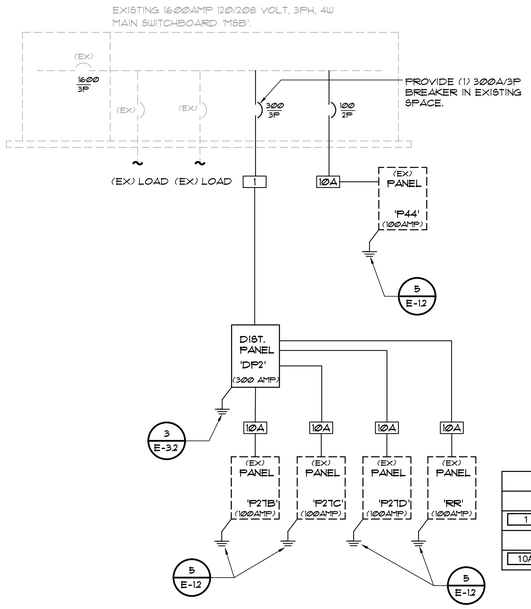

GENERAL NOTES:

1. A FAULT CURRENT AND TIME CURRENT STUDY MUST BE PROVIDED AS DESCRIBED IN THE SPECIFICATIONS PRIOR TO FINAL APPROVAL OF THE POWER EQUIPMENT.
2. UNLESS WHERE OTHERWISE NOTED, ALL WORK INDICATED ON THESE DRAWINGS SHALL BE CONSIDERED NEW WORK.
3. ALL ELECTRICAL GEAR AND EQUIPMENT SHOWN ON ONE-LINE DIAGRAM SHALL BE NEMA 3R UNLESS OTHERWISE NOTED.

600V FEEDER SCHEDULE GENERAL NOTES:

1. ALL CONDUCTOR SHALL BE PROVIDED WITH TYPE THWN-2 INSULATION. REFERENCE SPECIFICATION SECTION 26 05 19 FOR ADDITIONAL REQUIREMENTS.
2. PROVIDE 60 DEGREE COPPER/ALUMINUM RATED TERMINATION FOR ALL FEEDERS SIZED WITH #2 OR SMALLER CONDUCTORS. PROVIDE 75 DEGREE COPPER/ALUMINUM RATED TERMINATIONS FOR ALL FEEDERS SIZED WITH #1 OR LARGER CONDUCTORS.
3. CONTRACTOR SHALL BE RESPONSIBLE FOR ORDERING LUG CONFIGURATION AN ALL EQUIPMENT, BREAKER OF DISCONNECTS TO MATCH FEEDER CONFIGURATIONS INDICATED.
4. WHERE MULTIPLE CONDUIT QUANTITIES ARE INDICATED, CONDUCTOR QUANTITIES AND SIZES SHOWN IN SCHEDULE SHALL BE PROVIDED IN EACH CONDUIT.

	600Volt Feeder Schedule
1	3"C. 4 #350, 1 #3 GND.
10A	1-1/2"C. 3 # 1, 1 # 6 GND.

ELECTRICAL ONE LINE DIAGRAM

NO SCALE

3 / E-3.1

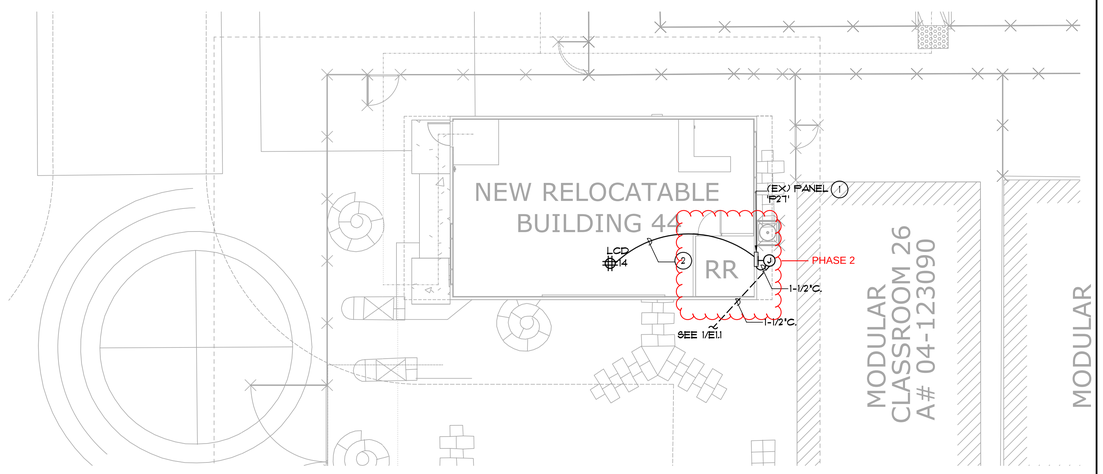

FLOOR PLAN #2 - POWER

SCALE: 1/8" = 1'-0" | 2

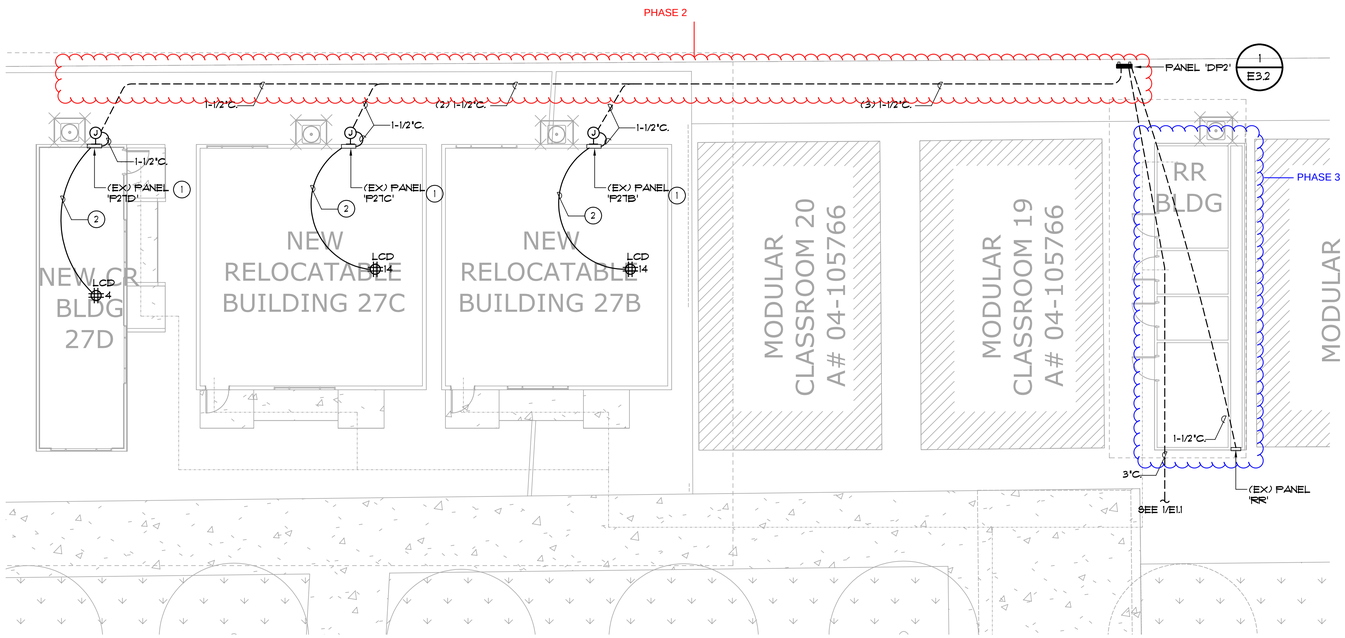

FLOOR PLAN #1 - POWER

SCALE: 1/8" = 1'-0" | 1

STAMPS

26047 8/18/2026

AGENCY APPROVAL
File No: ########-#######

IDENTIFICATION STAMP
DIV. OF THE STATE ARCHITECT
APP: 04-125522 INC:
REVIEWED FOR
SS ☑ FLS ☑ ACS ☑
DATE: 08/19/2026

JOHNSON CONSULTING ENGINEERS, INC.
Power | Lighting | Multimedia
Communications | Data Networking
12875 Brookprinter Place, Suite 300
Poway, CA 92064
P 858.679.4030 | F 858.513.0559
www.jce-inc.com

CONSULTANT BRANDING

RUHNAU CLARKE ARCHITECTS

GENERAL NOTES:

1. ALL JUNCTION BOXES SHOWN ON FLOOR PLAN SHALL BE NEMA 3R UNLESS OTHERWISE NOTED.
2. ALL ELECTRICAL GEAR AND EQUIPMENT SHOWN ON ONE-LINE DIAGRAM SHALL BE NEMA 3R UNLESS OTHERWISE NOTED.
3. SEE 3 / E-3.1 ONE LINE DIAGRAM FOR WIRING REQUIREMENT.
4. REFERENCE E1.2 FOR TYPICAL SITE DETAILS.

KEY NOTES:

1. PROVIDE (1) 20A/1P BREAKER IN EXISTING SPACE #14.
2. 3/4"C. 2 #12, 1 #12 GND.

RELOCATABLE CLASSROOM BUILDINGS:

PROJECT No. :
5/22/2026 9:39:41 AM

DRAWN BY: / CHECKED BY:
DELTA # ____ DATE ____ ADD AFO CCD REV
DELTA # ____ DATE ____ ADD AFO CCD REV
DELTA # ____ DATE ____ ADD AFO CCD REV
DELTA # ____ DATE ____ ADD AFO CCD REV

RUHNAUCLARKE.COM
3775 TENTH STREET, RIVERSIDE CALIFORNIA 92501 (951) 684 4664 / 5751 PALMER WAY, SUITE C, CARLSBAD CALIFORNIA 92010 (760) 438 5899 / 801 16TH STREET SACRAMENTO, CA 95814 (916) 379 8111

RELOCATABLE CLASSROOM BUILDINGS
1030 NARANCA AVE, EL CAJON, CA 92021
CAJON VALLEY UNION SCHOOL DISTRICT

FLOOR PLAN - POWER | E3.1

AGENCY APPROVAL
File No: ########-#######

STAMPS

26047 8/18/2026

IDENTIFICATION STAMP
DIV. OF THE STATE ARCHITECT
APP: 04-125522 INC:
REVIEWED FOR
SS ☑ FLS ☑ ACS ☑
DATE: 08/19/2026

JOHNSON CONSULTING ENGINEERS, INC.
Power | Lighting | Multimedia
Communications | Data Networking
12875 Brookprinter Place, Suite 300
Poway, CA 92064
P 858.679.4030 | F 858.513.0559
www.jce-inc.com

CONSULTANT BRANDING

RUHNAU CLARKE ARCHITECTS

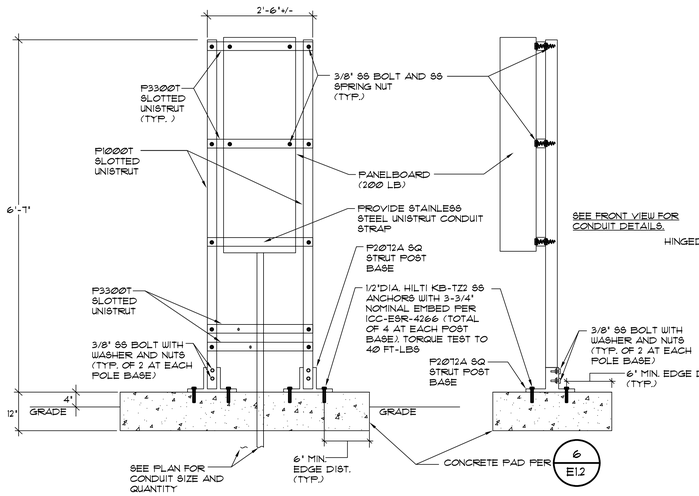

PANELBOARD SUPPORT DETAIL

NO SCALE

1 / E3.2

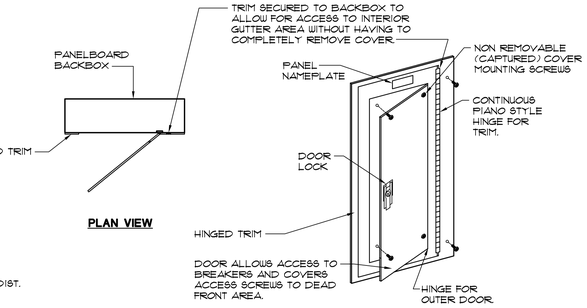

DETAIL GENERAL NOTES

1. PROVIDE FOR ALL PANELBOARDS FOR THIS PROJECT - SURFACE, RECESSED NEMA 1, OR NEMA 3R CONFIGURATION.
2. SEE REFERENCE ONE LINE DIAGRAM FOR ALL PANELBOARD AIC RATINGS.

TYPICAL PANELBOARD DOOR / TRIM DETAIL

NO SCALE

P67 2 / E3.2

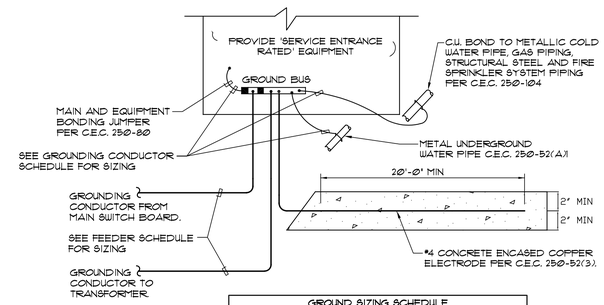

GROUND SIZING SCHEDULE	
EQUIPMENT AMPACITY	GROUNDING CONDUCTOR SIZE
0 - 200 AMPS	#4 CU.
201 - 400 AMPS	#1/0 CU.
401 - 800 AMPS	#2/0 CU.
801 - 1200 AMPS	#3/0 CU.
1201 - 2000 AMPS	#250 CU.
2001 - 4000 AMPS	#350 CU.

SERVICE ENTRANCE GROUNDING AND BONDING DETAIL

NO SCALE

G3 12004 CEC 3 / E3.2

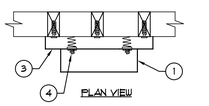

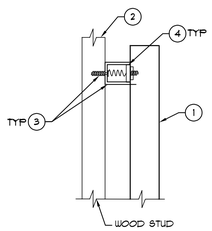

SIDE ELEVATION
(WOOD STUD)

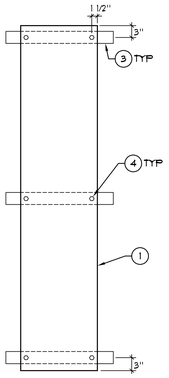

FRONT ELEVATION

DETAIL NOTES

1. ELECTRICAL PANEL WALL MOUNTED 30" H. X 20" W. X 6" D. MAXIMUM. 150 LBS MAXIMUM WEIGHT.
2. STUD WALL
3. UNISTRUT P1000 C-CHANNEL. (MUST SPAN TO 3 STUDS MIN.) W/ 3 - 3/8" DIA. X3" LAG SCREWS.
4. UNISTRUT P2380 ANCHOR.

SURFACE WALL MOUNTED ELECTRICAL PANEL DETAIL

NO SCALE

2 / E3.1

120/208	120/208 3PH, 4WIRE			300 AMP	Main	Breaker	X		ENCLOSURE TYPE	ENCLOSURE NOTE
	200% Neutral Bus					Lug			NEMA TYPE 1	
	(INTEGRAL)TVSS Protection				Enclosure	Recessed		X	NEMA TYPE 3R	
DP2	(REMOTE)TVSS Protection					Surface	X		NEMA TYPE 4X	
	Service Entrance Rated	X	GENERAL DISTRIBUTION		PROVIDE LOCK ON BREAKER DEVICES FOR ALL EMERGENCY LIGHTING,					
	Load Side Feed thru Lugs	X	BREAKER REQUIREMENTS :		MOTORS, AND FIRE ALARM EQUIPMENT SERVED FROM THIS PANEL					

LCL	NHL	CIRCUIT DESCRIPTION	AMP	POLE	NO	PHASE A	PHASE B	PHASE C	NO	AMP	POLE	CIRCUIT DESCRIPTION	LCL	NHL
			20	1	1	4800			2	100	2	Panel 'P30'		
		PANEL 'P31'				6000								
		"	20	1	3		4800		4			"		
							6000							
		SPARE	20	1	5				6	100	2	Panel 'P29'		
								6000						
		SPARE	20	1	7				8			"		
						6000								
		SPACE	20	1	9				10	100	2	RELO 'P28'		
							6000							
		SPACE	20	1	11				12			"		
								6000						
		SPACE	20	1	13				14	20	1	SPACE		
		SPACE	20	1	15				16	20	1	SPACE		
		SPACE	20	1	17				18	20	1	SPACE		
		SPACE	20	1	19				20	20	1	SPACE		
		SPACE	20	1	21				22	20	1	SPACE		
		SPACE	20	1	23				24	20	1	SPACE		
		SPACE	20	1	25				26	20	1	SPACE		
		SPACE	20	1	27				28	20	1	SPACE		
		SPACE	20	1	29				30	20	1	SPACE		
		SPACE	20	1	31				32	20	1	SPACE		
		SPACE	20	1	33				34	20	1	SPACE		
		SPACE	20	1	35				36	20	1	SPACE		
		SPACE	20	1	37				38	20	1	SPACE		
		SPACE	20	1	39				40	20	1	SPACE		
		SPACE	20	1	41				42	20	1	SPACE		

SPECIAL PANEL NOTE					NOTE #1		
					NOTE #2		
NHL= Non Harmonic Load	TOTAL LOAD PER PHASE	16800	16800	12000	HIGH PHASE	16800	/ 0.9pf = VA @ 120V 155.6 AMPS
LCL= Long Continuous Load	25% LONG CONTINUOUS LOADS	0	0	0	ALL PHASES	45600	/ 0.9pf = VA @ 208V/3PH 140.7 AMPS
	SUB PANEL						
Max. Neut. Load	SUB PANEL				DEMAND PER		AMPS
238 AMPS	TOTAL CONNECTED LOAD	16800	16800	12000	CEC 220-86		

M:\Panel Schedule\2026\26047 Naranca ES Relos\DP - 3PH - Panel.xls 10:55 AM6/8/2026

RELOCATABLE CLASSROOM BUILDINGS:

PROJECT No. :
5/22/2026 9:39:41 AM

DRAWN BY: CHECKED BY:
DELTA # ____ DATE ____ ADD AFO CCD REV
DELTA # ____ DATE ____ ADD AFO CCD REV
DELTA # ____ DATE ____ ADD AFO CCD REV
DELTA # ____ DATE ____ ADD AFO CCD REV

AGENCY APPROVAL
File No: ########-#######

IDENTIFICATION STAMP
DIV. OF THE STATE ARCHITECT
APP: 04-125522 INC:
REVIEWED FOR
SS ☑ FLS ☑ ACS ☑
DATE: 08/19/2026

*26047 7/22/2026
STAMPS

BACKBOX AND RING LEGEND

TYPE	DESCRIPTION
'B1'	4 11/16" square 2 1/8" deep box with single gang ring.
'B2'	4 11/16" square 2 1/8" deep box with dual gang ring.
'B3'	4" square 1 1/2" deep box with single gang ring.
'B4'	Single gang box, 2 1/8" deep.
'B5'	4-11/16" Square 3" deep box with dual gang ring.

'C1'	Provided by 27 10 00 contractor.
'C2'	Provided by 27 20 00 contractor.
'C4'	Provided by 27 51 16 contractor.
'C5'	Provided by 28 13 00 contractor.

FACEPLATE LEGEND

TYPE	DESCRIPTION
'AR'	As required to accommodate the number of ports designated.
'BP'	Blank faceplate.

'C1'	Provided by 27 10 00 contractor.
'C2'	Provided by 27 20 00 contractor.
'C4'	Provided by 27 51 16 contractor.
'C5'	Provided by 28 13 00 contractor.

CONDUIT / RACEWAY LEGEND

TYPE	DESCRIPTION
'3/4-S'	3/4" conduit stubbed from box into accessible ceiling space, unless detailed otherwise on drawings.
'1-S'	1" conduit stubbed from box into accessible ceiling space, unless detailed otherwise on drawings.
'1 1/4-S'	1 1/4" conduit stubbed from box into accessible ceiling space, unless detailed otherwise on drawings.

TECHNOLOGY SYMBOL LEGEND

SYMBOL	DESCRIPTION	BACKBOX & RING	FACE PLATE	CONDUIT / RACEWAY
	Single port data outlet, +18'' AFF. (U.O.N.)	Type 'B1'	Type 'AR'	Type '1-S'
2P	Dual port data outlet, +18'' AFF. (U.O.N.)	Type 'B1'	Type 'AR'	Type '1-S'
3P	Triple port data outlet, +18'' AFF. (U.O.N.)	Type 'B1'	Type 'AR'	Type '1-S'
4P	Quad port data outlet, +18'' AFF. (U.O.N.)	Type 'B1'	Type 'AR'	Type '1-S'
J	J-Box for Future Low-Voltage Devices @+18'' AFF (U.O.N.)	Type 'B1'	Type 'BP'	Type '1-S'
AP 2P LCD	Wireless access point ceiling mounted with Dual port data outlet	See detail 1/E4.3	See detail 1/E4.3	Type '1-S' Not required in accessible ceiling.
	Conduit sleeve through wall, above accessible ceiling.	Not required.	Not required.	3"C. for open low voltage wiring.
2"C.	Conduit sleeve through wall, above accessible ceiling.	Not required.	Not required.	(1) Conduit for open low voltage wiring, size as indicated.
(2) 2"C.	Conduit sleeve through wall, above accessible ceiling.	Not required.	Not required.	Conduit for open low voltage wiring, size and quantity as indicated.
	Conduit stubbed above accessible ceiling.	Not required.	Not required.	(1) 3/4" conduit for open low voltage wiring.
1 1/2"C.	Conduit stubbed above accessible ceiling.	Not required.	Not required.	(1) conduit for open low voltage wiring, size as indicated.
(2) 1"C.	Conduit stubbed above accessible ceiling.	Not required.	Not required.	Conduit for open low voltage wiring, size and quantity as indicated.
LCD	Ceiling mounted LCD projector, see detail 1/E4.6	See Detail 1/E4.6	Type -	Not required in accessible ceiling
3P	AUDIO-VISUAL LOCAL ORIGINATION INPUT WALL PLATE LOCATION WITH THREE DATA PORTS @+18" AFF (U.O.N) 1	TYPE 'B5' (LO) TYPE 'B1' (D)	TYPE 'C2' (LO) TYPE 'C1' (D)	TYPE '1-S' (LO) TYPE '1-S' (D)
2P LCD 1	Dual port data outlet at ceiling mounted projector. 1	NOT REQUIRED IN ACCESSIBLE CEILING	Type 'AR' See Detail 3/E4.6	Not required in accessible ceiling.
HC	Audio-visual volume control @+48'' AFF (U.O.N.). Refer to drawing details. Data outlet by 27 20 00 contractor.	TYPE 'B5' 2	Type 'C2'	Type '1-S'
S AV	Audio-visual system speaker ceiling mounted.	Not Required	Type 'C2'	Not Required in Accessible Ceiling

COMMUNICATION / SECURITY SYMBOL LEGEND

SYMBOL	DESCRIPTION	BACKBOX & RING	FACE PLATE	CONDUIT / RACEWAY
S A	Analog intercom speaker, recessed in ceiling. A=Page Zone	Type 'C4', installed by electrical contractor.	Type 'C4'	Type '3/4-S'
S B	Analog intercom horn, surface mounted on exterior wall, +8'-0" AFF (U.O.N.). A=Page Zone	Type 'C4', installed by electrical contractor.	Type 'C4'	Type '3/4-S'
CH	Clock wall mounted +84'' AFF.	Not required	Not required	Not required
	Security motion sensor ceiling mounted.	Type 'B3'	Type 'C5'	Type '3/4-S'
W 1	Classroom telephone @+48" AFF. W=wall mounted	Type 'B1'	Type 'C1'	Type '3/4-S'

KEY NOTES:

1. DATA CABLING AND DATA FACEPLATE FOR SYMBOL FURNISHED AND INSTALLED BY 27 10 00 CONTRACTOR.

2. JUNCTION BOX OR CUSTOM BACKBOX FOR VOLUME CONTROL FOR AUDIO-VISUAL SYSTEM. COORDINATE AND CONFIRM JUNCTION BOX OR CUSTOM BACKBOX WITH 27 20 00 CONTRACTOR PRIOR TO ROUGH-IN. CUSTOM BACKBOX WILL BE FURNISHED BY 27 20 00 CONTRACTOR AND INSTALLED BY DIV. 26 CONTRACTOR. REFER TO AUDIO-VISUAL SYSTEM DIAGRAMS ON E4 SERIES SHEETS.

JOHNSON CONSULTING ENGINEERS, INC.
Power | Lighting | Multimedia
Communications | Data Networking
12875 Brookprinter Place, Suite 300
Poway, CA 92064
P 858.679.4030 | F 858.513.0559
www.jce-inc.com

CONSULTANT BRANDING

RUHNAU CLARKE ARCHITECTS

GENERAL NOTES:

1. ALL CONDUITS WHICH ARE REQUIRED AS A PART OF SYSTEMS SPECIFIED FOR COMMUNICATIONS, TELEPHONE, INTERCOM, CLOCK FIRE ALARM, SECURITY, SOUND SYSTEMS, DATA NETWORKING, OR AUDIO-VISUAL SYSTEMS SHALL BE FURNISHED AND INSTALLED BY THE ELECTRICAL CONTRACTOR.

2. THE ELECTRICAL CONTRACTOR SHALL COORDINATE ALL CONDUIT REQUIREMENTS WITH EACH SYSTEM SUPPLIER PRIOR TO BID TO DETERMINE SPECIAL CONDUIT SYSTEM REQUIREMENTS.

3. THE ELECTRICAL CONTRACTOR SHALL PROVIDE CONDUIT SLEEVES FOR ALL OPEN CABLE INSTALLATIONS THROUGH RATED WALLS, BLOCK WALLS AND WHERE SHOWN ON THE DRAWINGS. PROVIDE CONDUIT FROM EACH BUILDING MAIN TERMINATION CABINET OR BACKBOARD TO THE NEAREST ACCESSIBLE CEILING FOR ACCESS INTO ALL ELECTRICAL OR COMMUNICATIONS ROOMS.

4. ALL CONDUIT, BOXES, AND RINGS SHALL BE FURNISHED AND INSTALLED BY ELECTRICAL CONTRACTOR.

5. ALL BLANK PLATES SHALL BE FURNISHED AND INSTALLED BY ELECTRICAL CONTRACTOR. (UNLESS OTHERWISE NOTED)

6. ALL CONDUITS SHALL BE FURNISHED WITH PULL STRINGS BY ELECTRICAL CONTRACTOR. COMMUNICATION CONTRACTOR TO PROVIDE POLYARIMID PULL TAPE WITH NEW CABLING INTO ALL CONDUITS BETWEEN BUILDINGS. SEE SPECIFICATIONS FOR REQUIREMENTS.

7. CONTRACTOR TO REVIEW ARCHITECTURAL CEILING PLANS TO DETERMINE LOCATIONS OF ACCESSIBLE CEILINGS PRIOR TO BID.

8. (27 1000) NUMBERS INDICATE MATCHING SPECIFICATION SECTION RESPONSIBLE FOR THIS WORK.

9. IN ADDITION TO THE ABOVE REQUIREMENTS, THE FOLLOWING REQUIREMENTS SHALL APPLY TO ALL DATA,VOICE, PAGING, AUDIO-VISUAL, SECURITY AND CLOCK CONDUITS:

10. FLEXIBLE METAL CONDUIT MAY BE USED ONLY WHERE REQUIRED AT BUILDING SEISMIC AND/OR EXPANSION JOINTS.

11. ALL UNDERGROUND CONDUITS SHALL BE PROVIDED WITH MINIMUM 24'' RADIUS ELBOWS.

12. NO LENGTH OF CONDUIT SHALL BE INSTALLED TO EXCEED 150 FEET BETWEEN PULL BOXES, OR POINTS OF CONNECTION, UNLESS WHERE SPECIFICALLY DETAILED ON THE DRAWINGS.

13. NO LENGTH OF CONDUIT SHALL BE INSTALLED TO EXCEED TWO 90 DEGREE BENDS BETWEEN PULL BOXES, OR POINTS OF CONNECTION, UNLESS WHERE SPECIFICALLY DETAILED ON THE DRAWINGS.

RELOCATABLE CLASSROOM BUILDINGS:

PROJECT No. :
5/22/2026 9:39:41 AM

DRAWN BY: CHECKED BY:
DELTA # ____ DATE ____ ADD AFO CCD REV
DELTA # ____ DATE ____ ADD AFO CCD REV
DELTA # ____ DATE ____ ADD AFO CCD REV
DELTA # ____ DATE ____ ADD AFO CCD REV

RELOCATABLE CLASSROOM BUILDINGS
1030 NARANCA AVE, EL CAJON, CA 92021
CAJON VALLEY UNION SCHOOL DISTRICT

COMMUNICATION LEGEND AND NOTES

E4.0

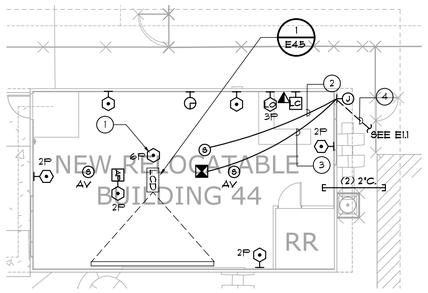

FLOOR PLAN #2 - COMM. | SCALE: 1/8" = 1'-0" | 2

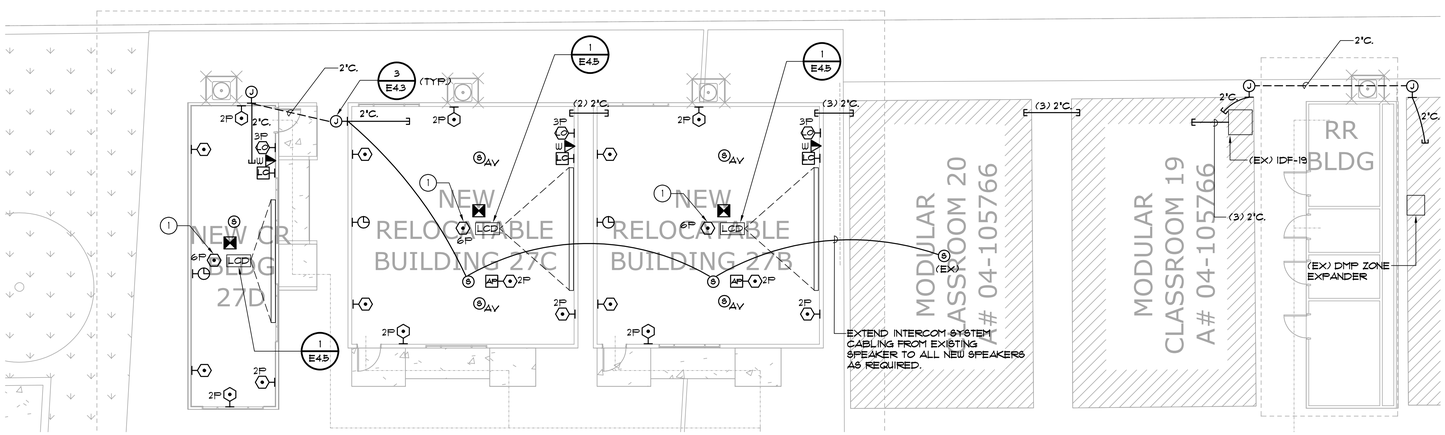

FLOOR PLAN #1 - COMM. | SCALE: 1/8" = 1'-0" | 1

STAMPS

#26047 8/18/2026

AGENCY APPROVAL
File No: ########-#######

IDENTIFICATION STAMP
DIV. OF THE STATE ARCHITECT
APP: 04-125522 INC:
REVIEWED FOR
SS ☑ FLS ☑ ACS ☑
DATE: 08/19/2026

CONSULTANT BRANDING

JOHNSON CONSULTING ENGINEERS, INC.
Power | Lighting | Multimedia
Communications | Data Networking
12875 Brookprinter Place, Suite 300
Poway, CA 92064
P 858.679.4030 | F 858.513.0559
www.jce-inc.com

RUHNAU CLARKE ARCHITECTS

GENERAL NOTES:

1. REFERENCE ARCHITECTURAL INTERIOR ELEVATIONS FOR EXACT LOCATION OF ALL WALL MOUNTED DEVICES.
2. REFERENCE E4 SERIES SHEETS FOR TYPICAL CONDUIT AND BACKBOX INSTALLATION DETAILS.
3. REFERENCE E4 SERIES SHEETS FOR TYPICAL COMMUNICATION SYSTEMS RISER DIAGRAM.
4. REFERENCE RISER DIAGRAMS FOR TYPICAL CONDUIT SIZES AND ROUTINGS.
5. LOCATION OF PROJECTOR AND OTHER AUDIO-VISUAL EQUIPMENT IS DIAGRAMMATICAL. EXACT LOCATION OF EQUIPMENT TO BE FIELD VERIFIED PRIOR TO INSTALLATION. LOCATION OF PROJECTOR AND PROJECTOR MOUNT TO BE COORDINATED WITH LOCATION OF SCREEN.
6. REFER TO AUDIO-VISUAL SYSTEM DETAILS FOR ADDITIONAL REQUIREMENTS, FOR JUNCTION BOX LOCATIONS, TYPES AND SIZES.

KEY NOTES:

1. PROVIDE 6-PORT BISCUIT. PROVIDE (2) PATCH CABLES FROM BISCUIT TO LCD PROJECTOR AND (2) PATCH CABLES FROM BISCUIT TO WAP.
2. 3/4"C. WITH INTERCOM CABLING TO EXISTING INTERCOM SPEAKER IN EXISTING CLASSROOM BUILDING '26'.
3. 3/4"C. WITH SECURITY SYSTEM CABLING TO EXISTING SECURITY MOTION SENSOR IN EXISTING CLASSROOM BUILDING '26'.
4. 1"C. WITH INTERCOM AND SECURITY SYSTEM CABLING TO EXISTING INTERCOM SPEAKER AND SECURITY MOTION SENSOR IN EXISTING CLASSROOM BUILDING '26'.

RELOCATABLE CLASSROOM BUILDINGS:

PROJECT No. :
5/22/2026 9:39:41 AM

DRAWN BY: DELTA # ____ DATE ____ / DELTA # ____ DATE ____ / DELTA # ____ DATE ____ / DELTA # ____ DATE ____
CHECKED BY: ADD AFO CCD REV

RUHNAUCLARKE.COM
3775 TENTH STREET, RIVERSIDE CALIFORNIA 92501 (951) 684 4664 / 5751 PALMER WAY, SUITE C, CARLSBAD CALIFORNIA 92008 (760) 438 5899 / 801 16TH STREET SACRAMENTO, CA 95814 (916) 379 8111

RELOCATABLE CLASSROOM BUILDINGS
1030 NARANCA AVE, EL CAJON, CA 92021
CAJON VALLEY UNION SCHOOL DISTRICT

FLOOR PLAN - COMM. | **E4.1**

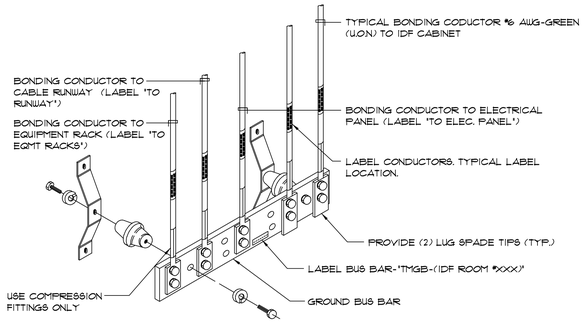

PROVIDE "CPI #3622-010" GROUND BAR ASSEMBLY 2"H x 10"W x 1/4"D OR EQUAL. (PROVIDE INSULATOR ASSEMBLIES)

NOTE: MONT GROUND BUS BAR BELOW IDF CABINET

TYPICAL CABLE/INSERT COLOR SCHEME DETAIL

NO SCALE

1 / E4.2

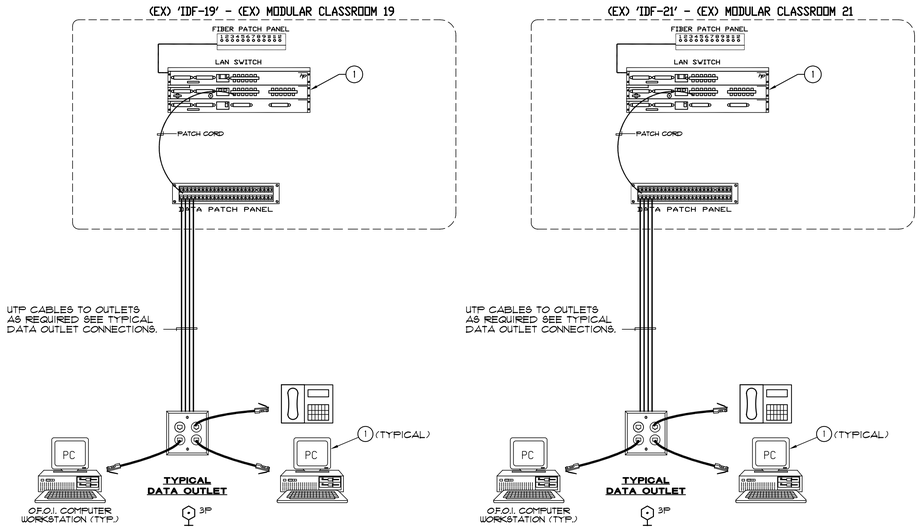

DATA NETWORKING WIRING DIAGRAM

NO SCALE

2 / E4.2

GENERAL NOTES:

1. SEE SPECIFICATIONS FOR TYPES AND QUANTITIES OF PATCH CORDS TO PROVIDE, AND FOR ADDITIONAL INSTALLATION REQUIREMENTS.
2. ALL ITEMS SHOWN ARE TO BE PROVIDED AND INSTALLED BY CONTRACTOR UNLESS OTHERWISE NOTED.

KEY NOTES:

1. DISTRICT FURNISHED AND INSTALLED.
2. PROVIDE 12-STRAND 50/125UM OM4 MULTIMODE FIBER OPTIC FEED CABLES.
3. NOT USED.
4. PROVIDE CABLING TO TELEPHONE TERMINAL CABINET IN CLASSROOM AS SHOWN ON FLOOR PLANS.
5. NOT USED.
6. NOT USED.
7. CONTRACTOR FURNISHED AND INSTALLED.

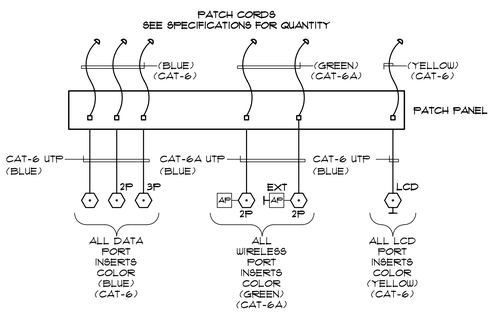

TYPICAL CABLE/INSERT COLOR SCHEME DETAIL

NO SCALE

3 / E4.2

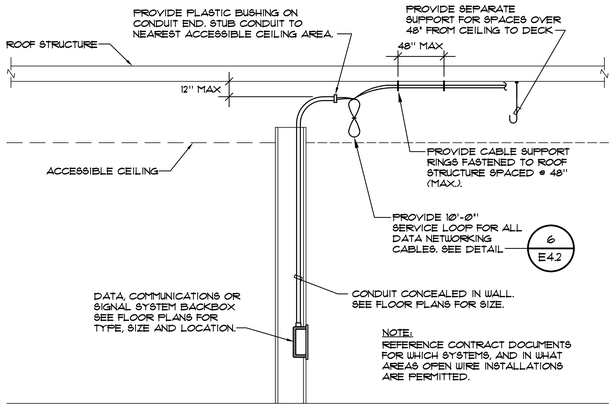

NOTE:
REFERENCE CONTRACT DOCUMENTS FOR WHICH SYSTEMS, AND IN WHAT AREAS OPEN WIRE INSTALLATIONS ARE PERMITTED.

COMMUNICATIONS SYSTEM OPEN WIRE/CONDUIT STUB TYPICAL DETAIL

NO SCALE

5 / E4.2

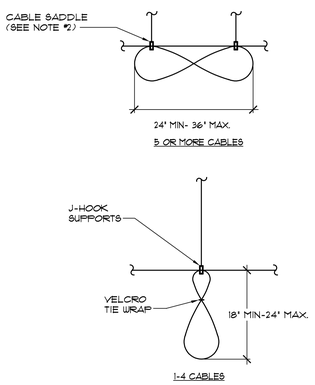

NOTE:
1. ALL SERVICE LOOPS SHALL BE FORMED IN FIGURE 8 CONFIGURATION
2. SADDLE SHALL BE SIZED TO HOLD QUANITY OF CABLES REQUIRED PER MANUFACTURE REQ.

TYPICAL SERVICE LOOP

NO SCALE

6 / E-4.2

AGENCY APPROVAL
File No.: ########-#######

IDENTIFICATION STAMP
DIV. OF THE STATE ARCHITECT
APP: 04-125522 INC:
REVIEWED FOR
SS ☑ FLS ☑ ACS ☑
DATE: 08/19/2026

STAMPS

JOHNSON CONSULTING ENGINEERS, INC.
Power | Lighting | Multimedia
Communications | Data Networking
12875 Brookprinter Place, Suite 300
Poway, CA 92064
P 858.679.4030 | F 858.513.0559
www.jce-inc.com

CONSULTANT BRANDING

RUHNAU CLARKE ARCHITECTS

RELOCATABLE CLASSROOM BUILDINGS:

PROJECT No. :
5/22/2026 9:39:41 AM

DRAWN BY: DELTA # ____ DATE ____ DELTA # ____ DATE ____ DELTA # ____ DATE ____ DELTA # ____ DATE ____
CHECKED BY: ADD AFO CCD REV

RUHNAUCLARKE.COM

3775 TENTH STREET, RIVERSIDE CALIFORNIA 92501 (951) 684 4664 / 5751 PALMER WAY, SUITE C, CARLSBAD CALIFORNIA 92008 (760) 438 5899 / 801 16TH STREET SACRAMENTO, CA 95814 379 8111

RELOCATABLE CLASSROOM BUILDINGS
1030 NARANCA AVE, EL CAJON, CA 92021
CAJON VALLEY UNION SCHOOL DISTRICT

COMMUNICATION DETAILS

E4.2

AGENCY APPROVAL
File No.: ########-#######

STAMPS
#26047 6/8/2026

IDENTIFICATION STAMP
DIV. OF THE STATE ARCHITECT
APP: 04-125522 INC:
REVIEWED FOR
SS ☑ FLS ☑ ACS ☑
DATE: 08/19/2026

JOHNSON CONSULTING ENGINEERS, INC.
Power | Lighting | Multimedia
Communications | Data Networking
12875 Brookprinter Place, Suite 300
Poway, CA 92064
P 858.679.4030 | F 858.513.0559
www.jce-inc.com

CONSULTANT BRANDING

RUHNAU CLARKE ARCHITECTS

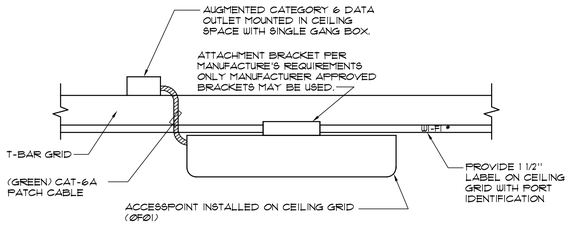

BELOW CEILING INSTALLATION

WIRELESS ACCESS POINT ANTENNA MOUNTING DETAILS

1 / E-4.3

NO SCALE

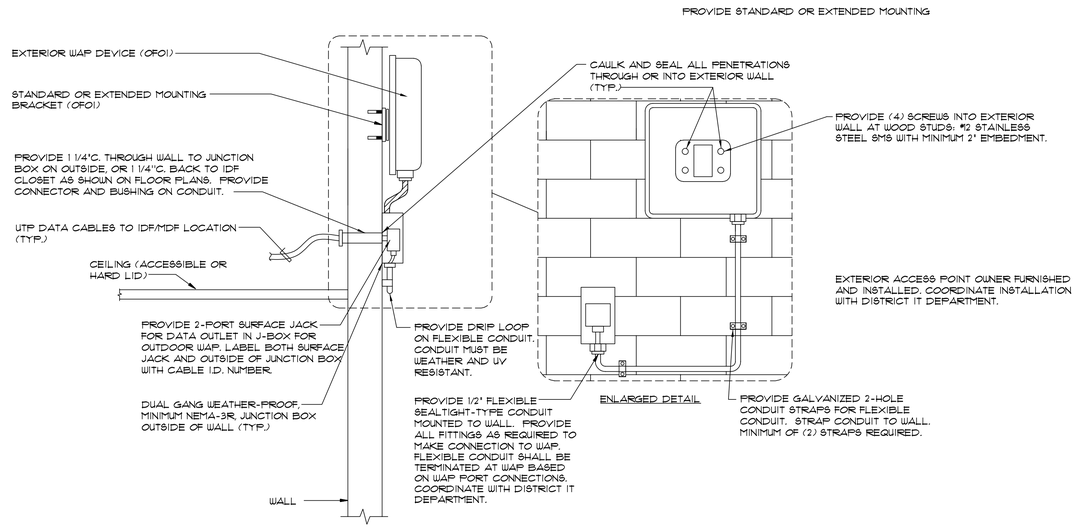

EXTERIOR WIRELESS ACCESS POINT MOUNTING DETAIL

2 / E4.3

NO SCALE

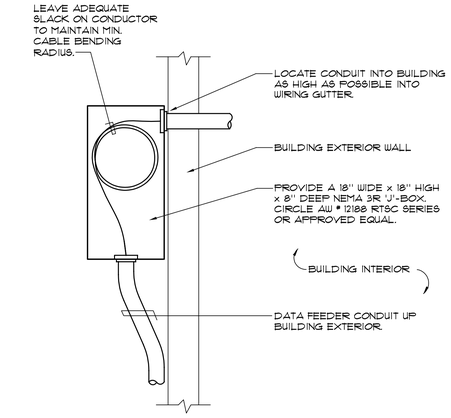

SIDE VIEW

DATA SYSTEM INSTALLATION DETAIL

3 / E-4.3

NO SCALE

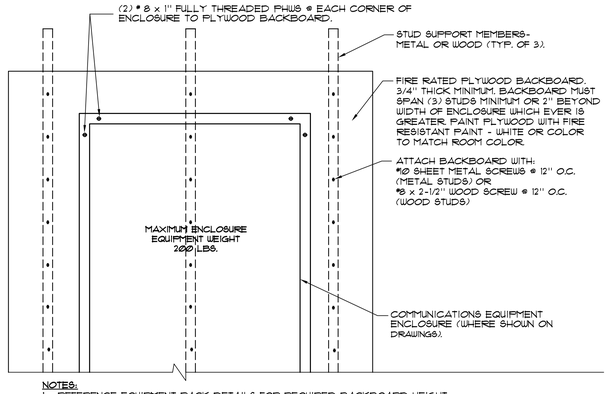

NOTES:
1. REFERENCE EQUIPMENT RACK DETAILS FOR REQUIRED BACKBOARD HEIGHT.
2. REFERENCE FLOOR PLANS FOR BACKBOARD WIDTH REQUIRED FOR COVERING LARGER WALL AREAS THAN FOR ISOLATED EQUIPMENT INSTALLATIONS.

TYPICAL BACKBOARD DETAIL

4 / E-4.3

NO SCALE

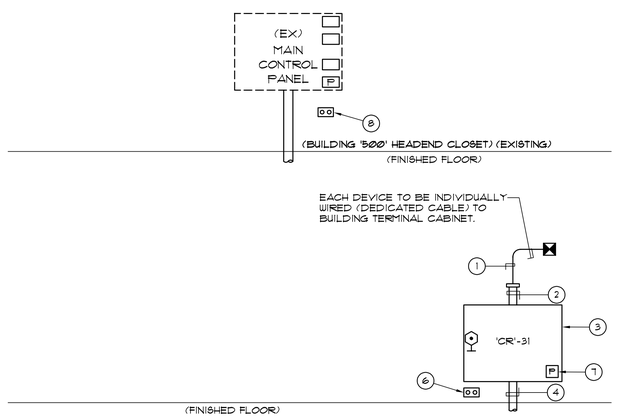

TYPICAL SECURITY SYSTEM DIAGRAM

5 / E4.3

NO SCALE

GENERAL NOTES:

1. ALL CONDUITS, POWER OUTLETS AND GROUNDING CONNECTIONS AND BACKBOARDS TO BE PROVIDED BY ELECTRICAL CONTRACTOR.
2. REFERENCE SPECIFICATIONS FOR ADDITIONAL REQUIREMENTS, AND FLOOR PLANS FOR ADDITIONAL EQUIPMENT ITEMS REQUIRED, AND THIER LOCATIONS.
3. WHERE OPEN CONDUCTORS ARE INSTALLED ABOVE ACCESSIBLE CEILINGS, ALL CONDUCTORS SHALL BE NEATLY BUNDLED TOGETHER AND SUPPORTED FROM ROOF STRUCTURE. WHERE BUNDLED WITH OTHER COMMUNICATION SYSTEMS, IDENTIFYING TAGS SHALL BE PROVIDED TO IDENTIFY THESE CONDUCTORS FROM OTHER SYSTEMS.
4. PROVIDE I.D. LABEL ON EACH END OF EACH CABLE. LABELS SHALL BE TYPE-WRITTEN P-TOUCH TYPE.

KEY NOTES:

1. WIRING AS REQUIRED BY MANUFACTURER.
2. PROVIDE MINIMUM (3) 1-1/4" CONDUIT STUBBED INTO ACCESSIBLE CEILING SPACE. PROVIDE PLASTIC BUSHINGS AT EACH END.
3. SECURITY EXTENDER PANEL. TIE INTO EXISTING MAIN SECURITY PANEL IN MDF ROOM. PROVIDE NEW ZONE CONTROL ON EXISTING KEYPAD.
4. SITE CONDUIT CONNECTION INTO SECURITY CABINET - PROVIDE 1-1/4"C. STUBBED INTO CEILING. PROVIDE PLASTIC BUSHINGS ON CONDUIT.
5. ALL SITE DISTRIBUTION CABLES SHALL BE WEST PENN AQUA SEAL #AQC 188 #8/8-CONDUCTOR FEED CABLE FROM EXPANSION PANEL TO EXISTING MAIN SECURITY PANEL IN MDF ROOM.
6. DUPLEX RECEPTACLE BY DIV. 26 CONTRACTOR. LOCATED 6" BELOW CABINET. FIELD VERIFY EXACT LOCATION WITH MANUFACTURER PRIOR TO ROUGH-IN.
7. POWER SUPPLY FOR INFRARED DETECTORS SIZED 50% SPARE CAPACITY.

RELOCATABLE CLASSROOM BUILDINGS:

PROJECT No. :
5/22/2026 9:39:41 AM

DRAWN BY: CHECKED BY:
DELTA # _____ DATE _____ ADD AFO CCD REV
DELTA # _____ DATE _____ ADD AFO CCD REV
DELTA # _____ DATE _____ ADD AFO CCD REV
DELTA # _____ DATE _____ ADD AFO CCD REV

RELOCATABLE CLASSROOM BUILDINGS
1030 NARANCA AVE, EL CAJON, CA 92021
CAJON VALLEY UNION SCHOOL DISTRICT

COMMUNICATION DETAILS

E4.3

AGENCY APPROVAL
File No: ########-#######

STAMPS
#26047 6/8/2026

IDENTIFICATION STAMP
DIV. OF THE STATE ARCHITECT
APP: 04-125522 INC:
REVIEWED FOR
SS ☑ FLS ☑ ACS ☑
DATE: 08/19/2026

JOHNSON CONSULTING ENGINEERS, INC.
Power | Lighting | Multimedia
Communications | Data Networking
12875 Brookprinter Place, Suite 300
Poway, CA 92064
P 858.679.4030 | F 858.513.0559
www.jce-inc.com

CONSULTANT BRANDING

RUHNAU CLARKE ARCHITECTS

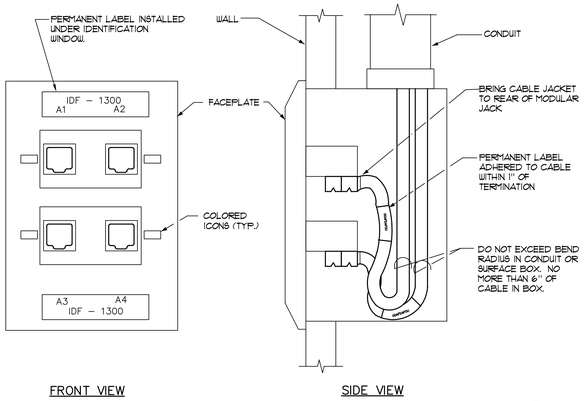

TYPICAL FACEPLATE LABELING DETAIL

NO SCALE

1 / E-4.4

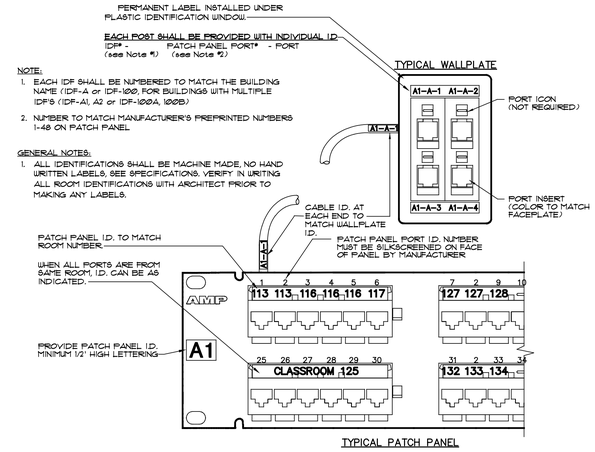

TYPICAL DATA NETWORKING LABELING REQUIREMENT

NO SCALE

2 / E-4.4

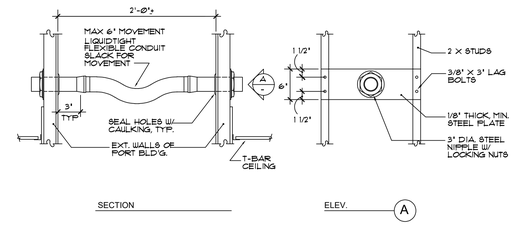

CONDUIT CONNECTIONS AT BUILDING SEPARATIONS

NO SCALE

3 / E-4.4

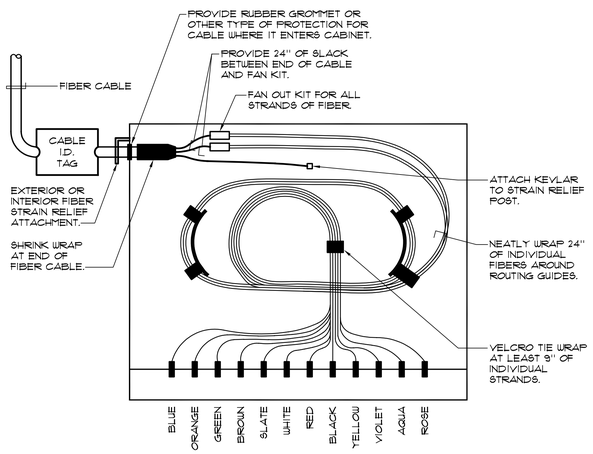

FIBER TERMINATION DETAIL

NO SCALE

4 / E4.4

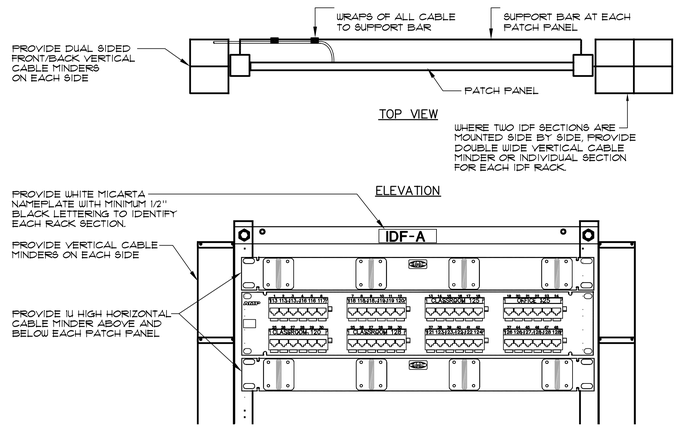

TYPICAL IDF/MDF LABELING AND CABLE SUPPORT DETAIL

NO SCALE

5 / E-4.4

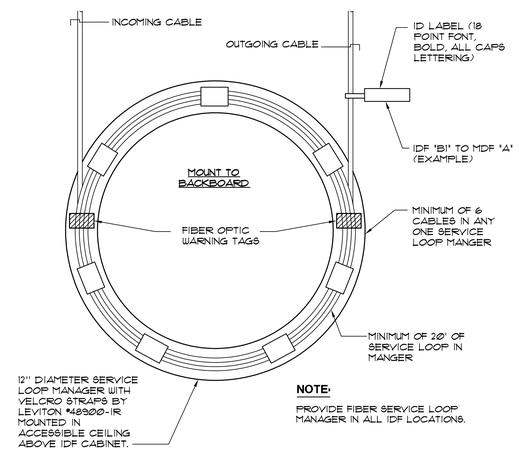

TYPICAL FIBER OPTIC FEED SERVICE LOOP DETAIL

NO SCALE

RET-14002

6 / E-4.4

RELOCATABLE CLASSROOM BUILDINGS:

PROJECT No. :
5/22/2026 9:39:41 AM

DRAWN BY:
DELTA # _____ DATE _____
DELTA # _____ DATE _____
DELTA # _____ DATE _____
DELTA # _____ DATE _____

CHECKED BY:
☐ ADD ☐ AFO ☐ CCD ☐ REV
☐ ADD ☐ AFO ☐ CCD ☐ REV
☐ ADD ☐ AFO ☐ CCD ☐ REV
☐ ADD ☐ AFO ☐ CCD ☐ REV

RELOCATABLE CLASSROOM BUILDINGS
1030 NARANCA AVE, EL CAJON, CA 92021
CAJON VALLEY UNION SCHOOL DISTRICT

COMMUNICATION DETAILS

E4.4

AGENCY APPROVAL
File No.: ########-#######

STAMPS
*26047 6/8/2026

IDENTIFICATION STAMP
DIV. OF THE STATE ARCHITECT
APP: 04-125522 INC:
REVIEWED FOR
SS ☑ FLS ☑ ACS ☑
DATE: 08/19/2026

JOHNSON CONSULTING ENGINEERS, INC.
Power | Lighting | Multimedia
Communications | Data Networking
12875 Brookprinter Place, Suite 300
Poway, CA 92064
P 858.679.4030 | F 858.513.0559
www.jce-inc.com

CONSULTANT BRANDING

RUHNAU CLARKE ARCHITECTS

Classroom with Ceiling Mounted Projector Installation

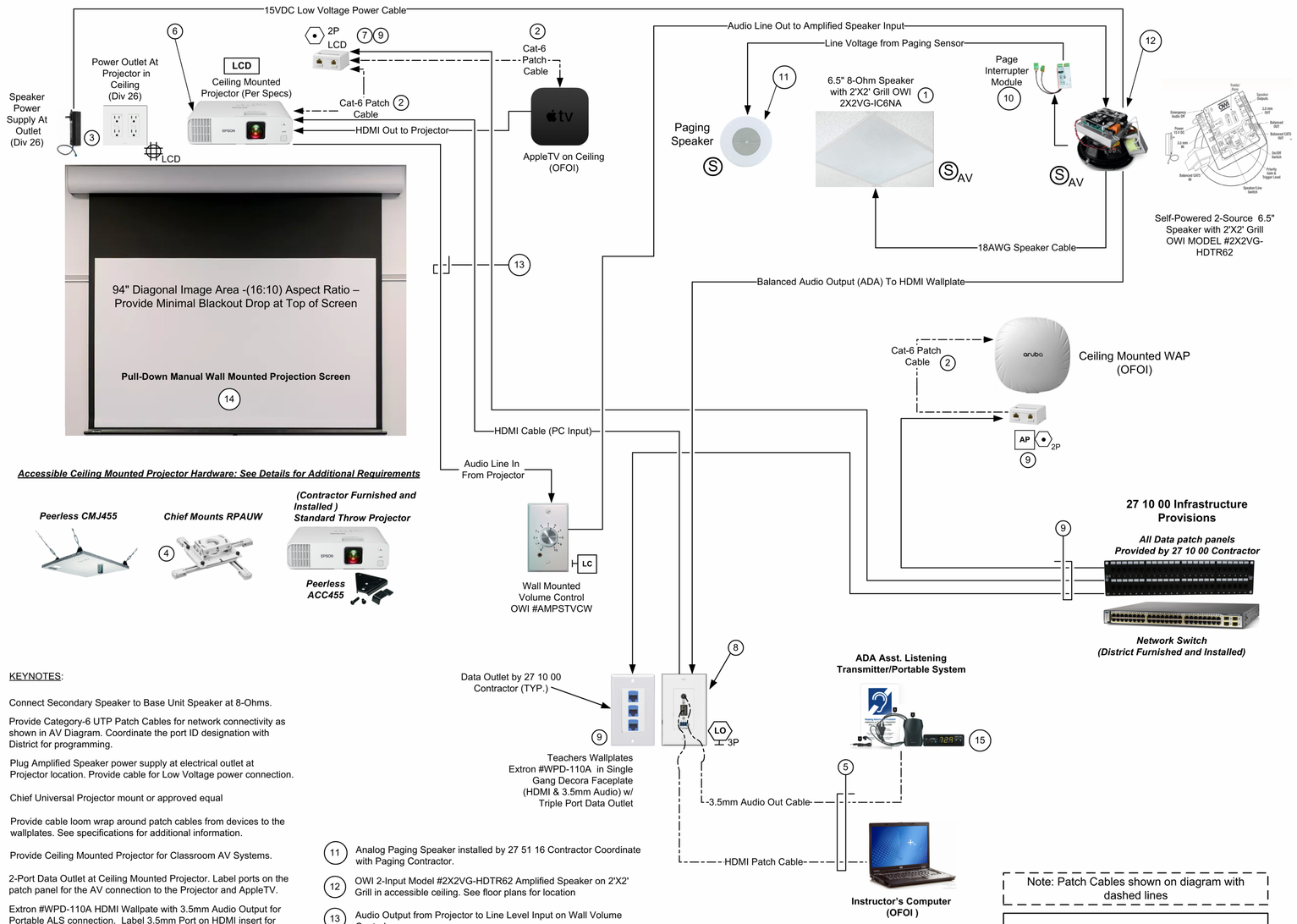

Accessible Ceiling Mounted Projector Hardware: See Details for Additional Requirements

Peerless CMJ455

Chief Mounts RPAUW

(Contractor Furnished and Installed) Standard Throw Projector

Peerless ACC455

KEYNOTES:

1. Connect Secondary Speaker to Base Unit Speaker at 8-Ohms.
2. Provide Category-6 UTP Patch Cables for network connectivity as shown in AV Diagram. Coordinate the port ID designation with District for programming.
3. Plug Amplified Speaker power supply at electrical outlet at Projector location. Provide cable for Low Voltage power connection.
4. Chief Universal Projector mount or approved equal
5. Provide cable loom wrap around patch cables from devices to the wallplates. See specifications for additional information.
6. Provide Ceiling Mounted Projector for Classroom AV Systems.
7. 2-Port Data Outlet at Ceiling Mounted Projector. Label ports on the patch panel for the AV connection to the Projector and AppleTV.
8. Extron #WPD-110A HDMI Wallpate with 3.5mm Audio Output for Portable ALS connection. Label 3.5mm Port on HDMI insert for ALS Audio connection
9. Category-6 UTP Data Cables, Outlet Wallplates and Surface Jacks furnished and installed by the 27 10 00 Contractor
10. Provide OWI #AMP-POP1 Page Interrupter Sensor Cable to nearest Analog Paging Speaker. Connect Page Mute Sensor to Speaker per manufacturer's instructions
11. Analog Paging Speaker installed by 27 51 16 Contractor Coordinate with Paging Contractor.
12. OWI 2-Input Model #2X2VG-HDTR62 Amplified Speaker on 2'X2' Grill in accessible ceiling. See floor plans for location
13. Audio Output from Projector to Line Level Input on Wall Volume Control
14. Manual Wall Mounted Free Hanging Projection Screen with Matte White XT1000E Screen Surface -1.0 Gain. Top of Screen Case 6" below Accessible Ceiling
15. ADA Portable Williams Sound ADA FM Kit. Connect Transmitter with 3.5mm audio patch cable provided by Contractor for Audio Output connection.

Devices at Teacher's Desk or User Station

Note: Patch Cables shown on diagram with dashed lines

Contractor Field Furnished and Installed Items include:

Contractor shall refer to specifications for additional materials and equipment requirements. Listed materials are shown for reference only. Exact quantities of materials and Part Numbers are to be confirmed by the Contractor prior to bid.

STANDARD CLASSROOM AV SYSTEM WITH ACCESSIBLE CEILING

NO SCALE

1
E-4.5

RELOCATABLE CLASSROOM BUILDINGS:

PROJECT No. :
5/22/2026 9:39:41 AM

DRAWN BY: CHECKED BY:
DELTA # _____ DATE _____ ADD AFO CCD REV
DELTA # _____ DATE _____ ADD AFO CCD REV
DELTA # _____ DATE _____ ADD AFO CCD REV
DELTA # _____ DATE _____ ADD AFO CCD REV

AGENCY APPROVAL
File No.: ########-#######

STAMPS
#26047 8/17/2026

IDENTIFICATION STAMP
DIV. OF THE STATE ARCHITECT
APP: 04-125522 INC:
REVIEWED FOR
SS ☑ FLS ☑ ACS ☑
DATE: 08/19/2026

CONSULTANT BRANDING

JOHNSON CONSULTING ENGINEERS, INC.
Power | Lighting | Multimedia
Communications | Data Networking
12875 Brookprinter Place, Suite 300
Poway, CA 92064
P 858.679.4030 | F 858.513.0559
www.jce-inc.com

RUHNAU CLARKE ARCHITECTS

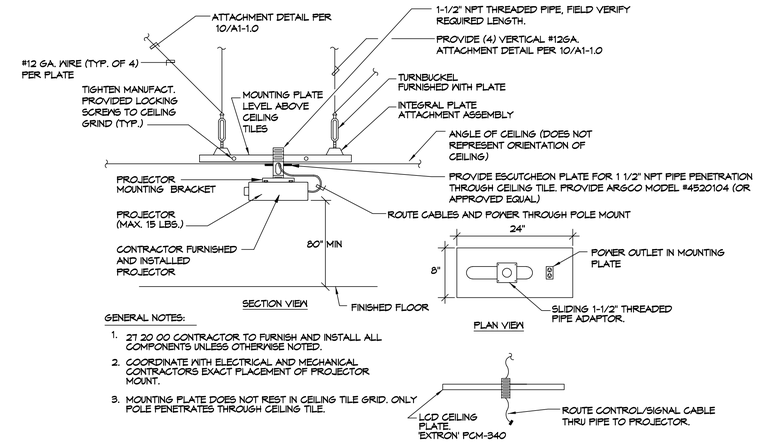

GENERAL NOTES:

1. 27 20 00 CONTRACTOR TO FURNISH AND INSTALL ALL COMPONENTS UNLESS OTHERWISE NOTED.
2. COORDINATE WITH ELECTRICAL AND MECHANICAL CONTRACTORS EXACT PLACEMENT OF PROJECTOR MOUNT.
3. MOUNTING PLATE DOES NOT REST IN CEILING TILE GRID. ONLY POLE PENETRATES THROUGH CEILING TILE.

CEILING PROJECTOR MOUNTING DETAIL FOR ACCESSIBLE CEILING

NO SCALE

1 / E-4.6

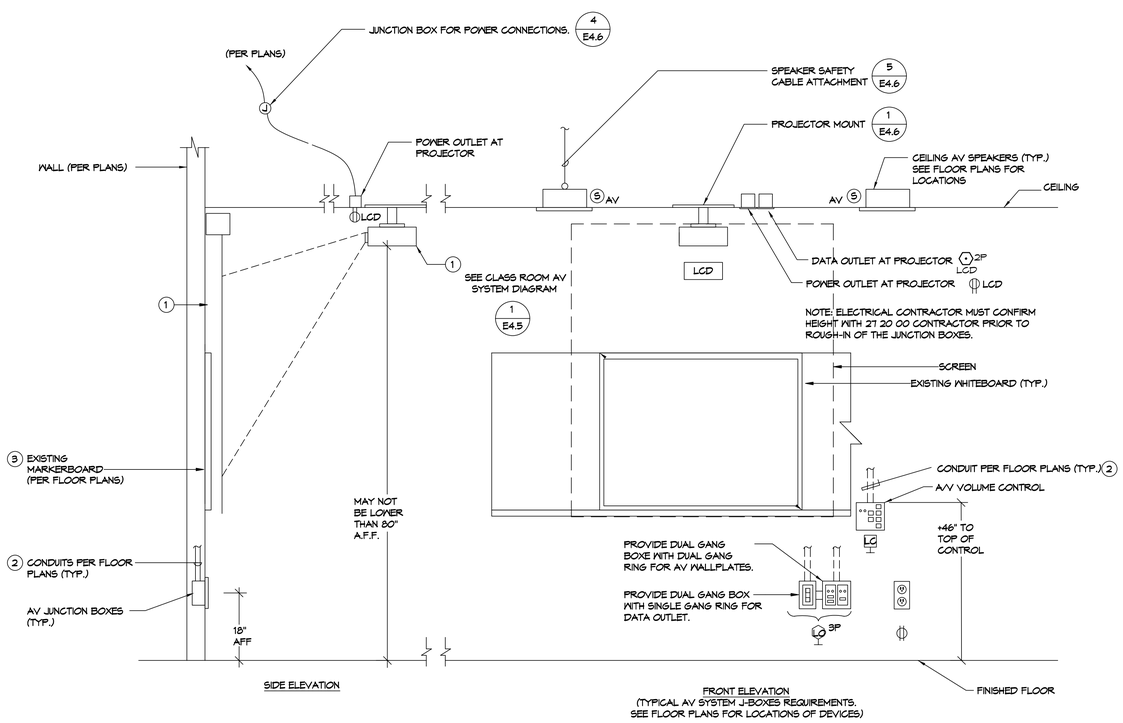

GENERAL NOTES:

1. DISTANCE TO PROJECTION SURFACE DEPENDENT ON SIZE OF IMAGE AND MODEL OF PROJECTOR. CONTRACTOR RESPONSIBLE FOR PLACEMENT OF PROJECTOR.
2. REFER TO CLASSROOM AUDIO-VISUAL SYSTEM DIAGRAMS FOR ADDITIONAL

DETAIL KEY NOTES:

1. HEIGHT OF PROJECTOR DETERMINED BY IMAGE SIZE REQUIREMENT.
2. 'A' REMODEL AREA. PROVIDE CONDUIT FOR NEW WALLS.
3. SEE ARCHITECTURAL INTERIOR ELEVATIONS FOR ROOM LAYOUTS. ADJUST INSTALLATION OF PROJECTOR HEIGHT PER HEIGHT OF WHITEBOARD.

TYPICAL STANDARD THROW PROJECTOR INSTALLATION - CLASSROOM AV SYSTEM

NO SCALE

3 / E-4.6

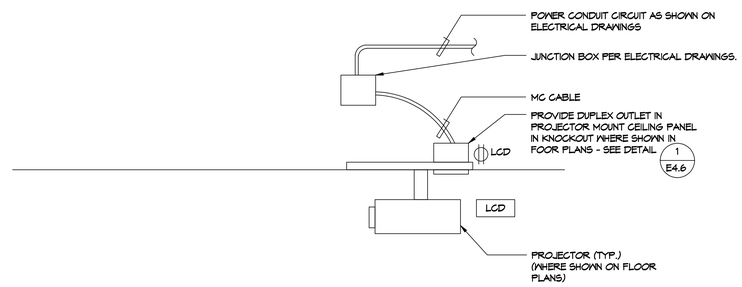

NOTES:

1. REFER TO ELECTRICAL AND COMMUNICATIONS FLOOR PLANS FOR LOCATIONS OF POWER AND AV DEVICES.

CEILING ENCLOSURE / PROJECTOR - POWER CONNECTION

NO SCALE

4 / E-4.6

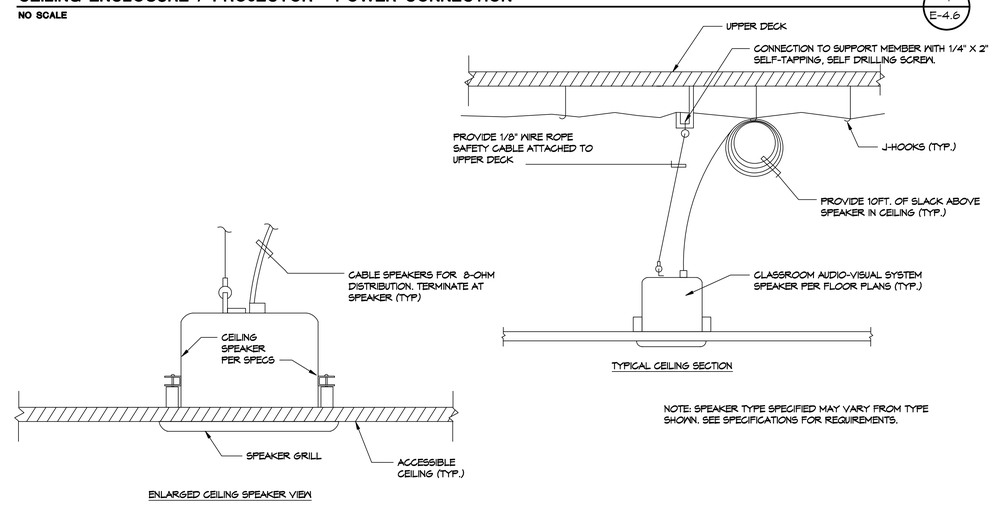

NOTE: SPEAKER TYPE SPECIFIED MAY VARY FROM TYPE SHOWN. SEE SPECIFICATIONS FOR REQUIREMENTS.

SOUND SYSTEM CEILING SPEAKER MOUNTING DETAIL

NO SCALE

5 / E-4.6

RELOCATABLE CLASSROOM BUILDINGS:

PROJECT No. :
5/22/2026 9:39:41 AM

DRAWN BY: / CHECKED BY:
DELTA # ____ DATE ____ ADD AFO CCD REV
DELTA # ____ DATE ____ ADD AFO CCD REV
DELTA # ____ DATE ____ ADD AFO CCD REV
DELTA # ____ DATE ____ ADD AFO CCD REV

RUHNAUCLARKE.COM

3775 TENTH STREET, RIVERSIDE CALIFORNIA 92501 (951) 684 4664 / 5751 PALMER WAY, SUITE C, CARLSBAD CALIFORNIA 92008 (760) 438 5899 / 801 16TH STREET SACRAMENTO, CA 95814 (916) 379 8111

RELOCATABLE CLASSROOM BUILDINGS
1030 NARANCA AVE, EL CAJON, CA 92021
CAJON VALLEY UNION SCHOOL DISTRICT

AUDIO VISUAL DETAILS

E4.6

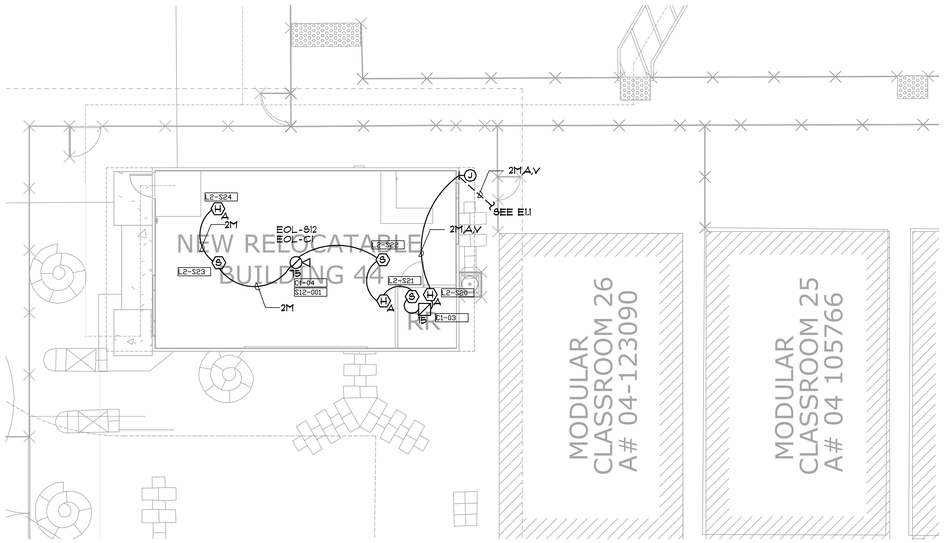

FLOOR PLAN #2 - FIRE ALARM | SCALE: 1/8" = 1'-0" | 2

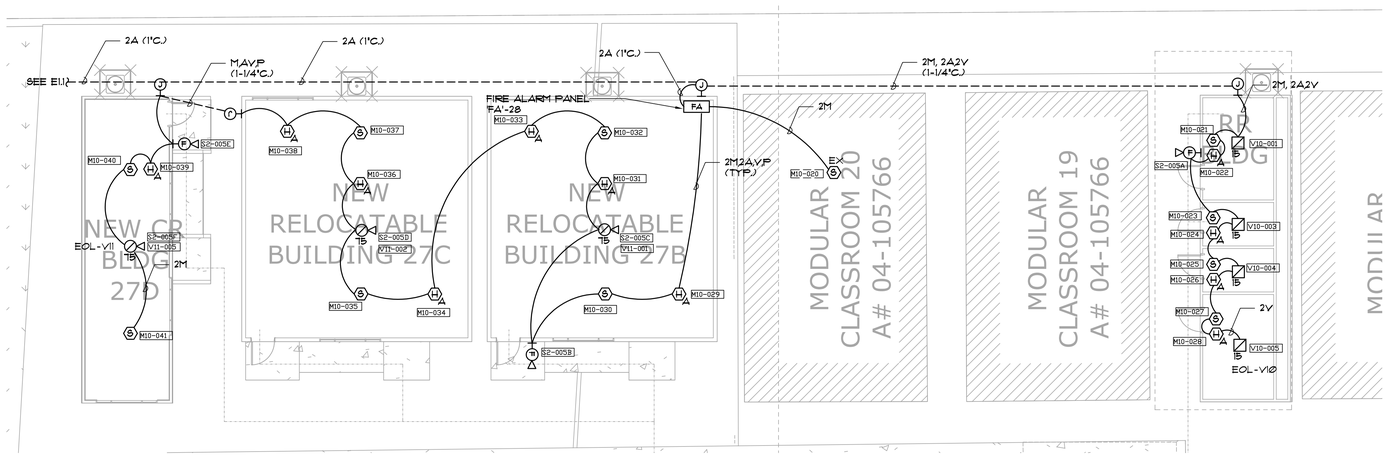

FLOOR PLAN #1 - FIRE ALARM | SCALE: 1/8" = 1'-0" | 1

PROJECT No. :
5/22/2026 9:39:41 AM

DRAWN BY:	CHECKED BY:			
DELTA # ____ DATE ____	☐ ADD	☐ AFO	☐ CCD	☐ REV
DELTA # ____ DATE ____	☐ ADD	☐ AFO	☐ CCD	☐ REV
DELTA # ____ DATE ____	☐ ADD	☐ AFO	☐ CCD	☐ REV
DELTA # ____ DATE ____	☐ ADD	☐ AFO	☐ CCD	☐ REV

RUHNAUCLARKE.COM
3775 TENTH STREET, RIVERSIDE CALIFORNIA 92501 (951) 684 4664 / 5751 PALMER WAY, SUITE C, CARLSBAD CALIFORNIA 92008 (760) 438 5899 / 801 16TH STREET SACRAMENTO, CA 95814 916 379 8111

RELOCATABLE CLASSROOM BUILDINGS
1030 NARANCA AVE, EL CAJON, CA 92021
CAJON VALLEY UNION SCHOOL DISTRICT

STAMPS
#26047 8/17/2026

AGENCY APPROVAL
File No.: ########-#######

IDENTIFICATION STAMP
DIV. OF THE STATE ARCHITECT
APP: 04-125522 INC:
REVIEWED FOR
SS ☑ FLS ☑ ACS ☑
DATE: 08/19/2026

CONSULTANT BRANDING

JOHNSON CONSULTING ENGINEERS, INC.
Power | Lighting | Multimedia
Communications | Data Networking
12875 Brookprinter Place, Suite 300
Poway, CA 92064
P 858.679.4030 | F 858.513.0559
www.jce-inc.com

RUHNAU CLARKE ARCHITECTS

GENERAL NOTES:

1. ALL WIRING INDICATED IS FOR GENERAL REFERENCE ONLY. CONTRACTOR SHALL PROVIDE ALL WIRING AND COMPONENTS NEEDED TO PROVIDE A COMPLETE OPERATIONAL SYSTEM.
2. REFERENCE FLOOR PLANS FOR EXACT QUANTITY, TYPE, AND LOCATION OF ALL DEVICES.
3. UNLESS OTHERWISE NOTED SOLID LINES BETWEEN DEVICES SHALL BE 1" EMT, ROUTED CONCEALED ABOVE CEILINGS OR IN WALLS. DASHED LINES INDICATE 1-1/4" P.V.C. UNDERGROUND CONDUIT U.O.N. ALL WIRING TO BE PROVIDED PER MANUFACTURER SHOP DRAWINGS.
4. REFERENCE E5.3 RISER DIAGRAM FOR ADDITIONAL WIRING REQUIREMENTS.

FIRE ALARM SYMBOL LEGENDS

- CEILING MOUNTED COMBINATION SPEAKER/STROBE (15 = STROBE CANDELA RATING) (S1 = SIGNAL CIRCUIT IDENTIFICATION) TAP AT 1/2 WATT
- CEILING MOUNTED FLASHING LIGHT STROBE (15 = STROBE CANDELA RATING) (S1 = SIGNAL CIRCUIT IDENTIFICATION)
- WALL MOUNTED WEATHERPROOF EXTERIOR SPEAKER. FLUSH MOUNTED @80" A.F.F. TO BOTTOM OF DEVICE (S1 = SIGNAL CIRCUIT IDENTIFICATION) SPEAKER TAPPED AT 2 WATT
- HEAT DETECTOR MOUNTED ABOVE CEILING
- CEILING MOUNTED SMOKE DETECTOR
- FACP MAIN FIRE ALARM CONTROL PANEL
- FA FIRE ALARM EXTENDER PANEL
- EOL END OF LINE RESISTOR

FIRE ALARM NOTE:
THIS FIRE ALARM DESIGN IS A COMPLETE PLAN SUBMITTAL IN ACCORDANCE WITH 2025 CBC 907.1.

FULLY AUTOMATIC FIRE ALARM DESIGN:
THIS PROJECT IS DESIGNED TO COMPLY WITH ALL REQUIREMENTS FOR A FULLY PROTECTED AUTOMATIC FIRE ALARM SYSTEM.

EXPANSION OF EXISTING SYSTEM:
THIS PROJECT ADDS TO AND OR MODIFIES AN EXISTING SYSTEM, PREVIOUSLY APPROVED BY DSA. ALL NEW COMPONENTS ARE COMPATIBLE WITH THE EXISTING SYSTEM EQUIPMENT.

RELOCATABLE CLASSROOM BUILDINGS:

FLOOR PLAN - FIRE ALARM

E5.1

AGENCY APPROVAL
File No.: ########-#######

STAMPS

26047 8/18/2026

IDENTIFICATION STAMP
DIV. OF THE STATE ARCHITECT
APP: 04-125522 INC:
REVIEWED FOR
SS ☑ FLS ☑ ACS ☑
DATE: 08/19/2026

JOHNSON CONSULTING ENGINEERS, INC.
Power | Lighting | Multimedia
Communications | Data Networking
12875 Brookprinter Place, Suite 300
Poway, CA 92064
P 858.679.4030 | F 858.513.0559
www.jce-inc.com

CONSULTANT BRANDING

RUHNAU CLARKE ARCHITECTS

(EX) FCI MODEL E3

	SYM	MODEL NO.	DESCRIPTION	C.S.F.M. LISTING	MFG.
001	FACP	FCI-E3	(EX) FIRE ALARM CONTROL PANEL/VOICE EVAC, A#04-119065	7165-1703:0125	GAMEWELL FCI
	VG	INI-VG	VOICE GATEWAY	7165-1703:0125	GAMEWELL FCI
	AMP	AM-50	AMPLIFIER	7165-1703:0125	GAMEWELL FCI
002	FA	HPF-PS10B	REMOTE POWER SUPPLY	7315-1637:0505	HONEYWELL
007	S	ASD-PL3	INTELLIGENT SMOKE DETECTOR	7272-1703:0501	GAMEWELL FCI
		B300-6	SENSOR BASE	7300-1653:0109	GAMEWELL FCI
	H	ATD-L3H	INTELLIGENT HEAT DETECTOR (ABOVE CEILING)	7270-1703:0502	GAMEWELL FCI
		B300-6	SENSOR BASE	7300-1653:0109	SYSTEM SENSOR
016		ET-1010	EXTERIOR SPEAKER W/VBB BACKBOX	7320-0785:0105	COOPER WHEELOCK
019		SCRLED	STROBE (15/30/75/95/110/135/185) cd	7300-1653:0525	SYSTEM SENSOR
024		SPSCRLED	SPEAKER/STROBE - CEILING	7125-1653:0533	SYSTEM SENSOR
028		TYPE FPL	SIGNAL LINE CIRCUIT CONDUCTORS ('M')	7161-0859:0101	WEST PENN
029		TYPE THHN	VISUAL AND POWER CONDUCTORS (V,P)	N/A	SOUTHWIRE

WIRING SCHEDULE

DES	CONDUCTOR TYPE	WIRE COLOR	CIRCUIT TYPE
M	(1) 1 PR #12 TWISTED	RED/BLACK/SHIELD	SIGNAL LINE CIRCUIT
A	(2) #12 THHN (UON ON CALCS)	BLUE/WHITE	NOTIF. APP. CIRCUIT (VISUAL)
V	(2) #12 THHN (UON ON CALCS)	BLUE/WHITE	NOTIF. APP. CIRCUIT (AUDIBLE)
P	(2) #12 THHN	RED/BLACK	POWER

ANNUNCIATOR ZONE SCHEDULE

	ROOM SMOKE OR HEAT DETECTORS	ABOVE CEILING HEAT DETECTORS	MANUAL PULL STATIONS	DUCT DETECTORS	SPRINKLER SYSTEM	TROUBLE INDICATION
ALL RELOS	YES	YES	NO	NO	N/A	YES

NOTES:
1. ALL SMOKE DETECTORS, HEAT DETECTORS ABOVE CEILING DETECTORS SHALL BE INDIVIDUALLY ADDRESSABLE.

FIRE ALARM MONITORING NOTE:

1. AUTOMATIC FIRE ALARM SYSTEMS SHALL TRANSMIT THE ALARM, SUPERVISORY AND TROUBLE SIGNALS TO AN APPROVED SUPERVISING STATION AS REQUIRED BY NFPA 72 AS AMENDED BY CFC SECTION 907. THE SUPERVISING STATION SHALL BE LISTED AS EITHER UUFX OR UUJS BY UNDERWRITERS LABORATORY OR SHALL MEET THE REQUIREMENTS OF FACTORY MUTUAL RESEARCH APPROVAL STANDARD 3011. SUPERVISION OF SYSTEM AND LEASED TELEPHONE LINES SHALL BE ARRANGED BY OWNER.

FIRE ALARM GENERAL REQUIREMENTS:

1. THE COMPLETE INSTALLATION SHALL BE REVIEWED AND APPROVED BY THE ABOVE LOCAL MANUFACTURERS REPRESENTATIVE. SEE SPECIFICATIONS (28 30 00). FOR ADDITIONAL CONTRACTOR QUALIFICATIONS AND REQUIREMENTS.
2. UNLESS OTHERWISE NOTED SOLID LINES BETWEEN DEVICES SHALL BE MIN. 1" E.M.T. ROUTED CONCEALED ABOVE CEILINGS OR IN WALLS. DASHED LINES INDICATE MIN. 1-1/4" P.V.C. UNDERGROUND CONDUIT. ALL WIRING TYPES AND QUANTITIES SHOWN ARE FOR INFORMATION ONLY. THE CONTRACTOR SHALL PROVIDE ALL WIRING AS REQUIRED TO MAKE A FULLY OPERATIONAL SYSTEM. SHOP DRAWINGS AND OR AS-BUILT DOCUMENTS SHALL INDICATE ALL WIRING PROVIDED.
3. THE AUDIBILITY OF FIRE ALARM WARNING DEVICES SHALL BE AUDIBLE THROUGH THE OCCUPANCY WITH A MINIMAL SOUND LEVEL 15 db's OVER THE AMBIENT NOISE LEVEL. ADD ADDITIONAL DEVICES AS REQUIRED.
4. UPON COMPLETION OF THE INSTALLATION OF THE FIRE ALARM SYSTEM, A REACCEPTANCE TEST OF THE ENTIRE SYSTEM SHALL BE PERFORMED IN THE PRESENCE OF THE ENFORCING AGENCY AND IN ACCORDANCE WITH SPECIFICATIONS (28 30 00). THE CONTRACTOR SHALL FURNISH db METERS AND ALL OTHER EQUIPMENT TO PERFORM THESE TESTS.
5. ALL OPERATING HARDWARE AT INITIATING DEVICES SHALL NOT REQUIRE TIGHT GRASPING, PINCHING OR TWISTING OF THE WRIST, AND THE FORCE REQUIRED TO OPERATE SHALL BE LESS THAN 5 POUNDS.

MAXIMUM NUMBER OF CONDUCTORS IN TRADE SIZES OF CONDUIT OR TUBING MINIMUM CONDUIT SIZE FOR THIS PROJECT IS 1"

CONDUIT TRADE SIZE (INCHES)		1/2	3/4	1	1 1/4	1 1/2	2	2 1/2	3	3 1/2	4	5
TYPE LETTERS	CONDUCTOR SIZE AWG, kcmil											
THWN	14	13	24	39	69	94	154					
	12	10	18	29	51	70	114	164				
THHN	10	6	11	18	32	44	73	104	160			
	8	3	5	9	16	22	36	51	79	106	136	

TRADE SIZE	INTERNAL DIAMETER INCHES	AREA——SQUARE INCHES									
			PERCENT REDUCTION PER NUMBER OF 18AWG TWSTED SHIELD PAIRS								
		100% INCHES	OVER 2 COND. 40%	1	2	3	4	5	6	7	8
1/2	.622	.30	.12	38%	66%	99%	X	X	X	X	X
3/4	.824	.53	.21	19%	38%	57%	76%	95%	X	X	X
1	1.049	.86	.34	12%	24%	36%	48%	60%	72%	84%	96%
1 1/4	1.380	1.50	.60	7%	14%	21%	28%	35%	42%	49%	56%
1 1/2	1.610	2.04	.82	5%	10%	15%	20%	25%	30%	35%	40%
2	2.067	3.36	1.34	3%	6%	9%	12%	15%	18%	21%	24%

APPLICABLE CODES AND STANDARDS

SEE ARCHITECTURAL TITLE SHEET

FIRE ALARM SEQUENCE OF OPERATION

ACTION \ DEVICE	MANUAL PULL STATION	AREA/DUCT SMOKE/HEAT DETECTOR	AC POWER FAILURE		
SOUND ALARM TROUGHOUT BLDG.	YES	YES	NO		
ACTIVATE RELAY FOR MONITORING	YES	YES	YES		
ANNUNCIATE AT PANEL AND ANNUNCIATOR	YES	YES	YES		
SOUND TROUBLE BUZZER	ON WIRING FAULT	ON WIRING FAULT	YES		
REPORT TO MONITORING STATION	YES	YES	YES		

RELOCATABLE CLASSROOM BUILDINGS:

PROJECT No. :
5/22/2026 9:39:41 AM

DRAWN BY: CHECKED BY:
DELTA # ____ DATE ____ ☐ ADD ☐ AFO ☐ CCD ☐ REV
DELTA # ____ DATE ____ ☐ ADD ☐ AFO ☐ CCD ☐ REV
DELTA # ____ DATE ____ ☐ ADD ☐ AFO ☐ CCD ☐ REV
DELTA # ____ DATE ____ ☐ ADD ☐ AFO ☐ CCD ☐ REV

RUHNAUCLARKE.COM
3775 TENTH STREET, RIVERSIDE CALIFORNIA 92501 (951) 684 4664 / 5751 PALMER WAY, SUITE C, CARLSBAD CALIFORNIA 92008 (760) 438 5899 / 801 16TH STREET SACRAMENTO, CA 95814 379 8111

RELOCATABLE CLASSROOM BUILDINGS
1030 NARANCA AVE, EL CAJON, CA 92021
CAJON VALLEY UNION SCHOOL DISTRICT

FIRE ALARM SCHEDULE AND NOTES

E5.2

AGENCY APPROVAL
File No.: ########-#######

STAMPS

*26047 8/17/2026

IDENTIFICATION STAMP
DIV. OF THE STATE ARCHITECT
APP: 04-125522 INC:
REVIEWED FOR
SS ☑ FLS ☑ ACS ☑
DATE: 08/19/2026

JOHNSON CONSULTING ENGINEERS, INC.
Power | Lighting | Multimedia
Communications | Data Networking
12875 Brookprinter Place, Suite 300
Poway, CA 92064
P 858.679.4030 | F 858.513.0559
www.jce-inc.com

CONSULTANT BRANDING

RUHNAU CLARKE ARCHITECTS

Building '28' (FA-28)

Remote Extender Panel
Supplementary Notification Appliance Circuit Battery Calculations

Type of Device Or Equipment	Standby Amperage Qty	Current	Total	Alarm Amperage Quantity	Current	Total
Exterior Speaker	2	0.000	0.000	2	0.08300	0.166
NAC Panel	1	0.156	0.156	1	0.185	0.185
75cd (Ceiling) Speaker Strobe				3	0.070	0.210
15cd (Ceiling) Strobe				4	0.018	0.072
Total Standby Amperage			**0.156**	**Total Alarm Amperage**		**0.633**

Standby Time Required

24 Hours x Total Standby Amperage = 24 x 0.156 = 3.744 Amp Hours

Alarm Time Required

.25(1 5 Min.) x Total Alarm Amperage = .25 x 0.633 = 0.158 Amp Hours

Total Required = **3.902** Amp Hours
x125% = 4.8778125
Provide Battery & Minimum Battery Amp Hour Required = **7** Amp Hours

Building '26' (NAC-RL)

(EX) Remote Extender Panel
Supplementary Notification Appliance Circuit Battery Calculations

Type of Device Or Equipment	Standby Amperage Qty	Current	Total	Alarm Amperage Quantity	Current	Total
(EX) LOAD PER A#04-123090	1	0.060	0.060	1	5.03400	5.034
NEW DEVICES:						
75cd (Ceiling) Speaker Strobe				1	0.070	0.070
15cd (Ceiling) Strobe				1	0.018	0.018
Total Standby Amperage			**0.060**	**Total Alarm Amperage**		**5.122**

Standby Time Required

24 Hours x Total Standby Amperage = 24 x 0.060 = 1.440 Amp Hours

Alarm Time Required

.25 (15 Min.) x Total Alarm Amperage = .25 x 5.122 = 1.281 Amp Hours

Total Required = **2.721** Amp Hours
x125% = 3.400625
(EX) BATTERY AH = **7** Amp Hours

(EX) Fire Alarm Control Panel

FACP FCI E3 Battery Calculations

(EX) Building ' ADMIN' (FACP)

Type of Device Or Equipment	Standby Amperage Qty	Current	Total	Alarm Amperage Quantity	Current	Total
EXISTING LOAD PER A#04-123090						
	1	0.4360	0.4360	1	5.2010	5.2010
NEW SIGNAL LINE DEVICES:						
Smoke Detector	2	0.0002	0.0004	2	0.0020	0.0040
Smoke Detector Base	2	0.00017	0.00034	2	0.0000	0.0000
Heat Detector	2	0.0002	0.0004	2	0.0020	0.0040
Heat Detector Base	2	0.00017	0.00034	2	0.0000	0.0000
VOICE GATEWAY	1	0.1500	0.1500	1	0.1500	0.1500
AMPLIFIER	1	0.086	0.086	1	2.3000	2.3000
Total Standby Amperage			**0.673**	**Total Alarm Amperage**		**7.659**

Standby Time Required

24 Hours x Total Standby Amperage = 24 x 0.636 = 16.16 Amp Hours

Alarm Time Required

.25 (15 Min.) x Total Alarm Amperage = 0.25 x 7.659 = 1.915 Amp Hours

Total Required = **18.075** Amp Hours
x125% = 22.59375
(EX) Battery Amp Hour = **28** Amp Hours

Fire Alarm Voltage Drop Calculations

Calculation Formula:

Total Current x Feet x 21.6 / Circular Mills (Voltage Drop)

Circular Mils Using #10 wire =10380
Circular Mils Using #12 wire = 6530
Circular Mils Using #14 wire = 4110
Circular Mils Using #18 wire = 1620

Voltage Drop / 24 Volts x 100 Percent = Percentage Voltage Drop

Building '28' (FA-28)

Device Type	Circuit: V10 Devices x Current		Total Current	Circuit: V11 Devices x Current		Total Current
Exterior Speaker	1	0.08300	0.083	1	0.08300	0.083
75cd (Ceiling) Strobe				3	0.070	0.210
15cd (Ceiling) Strobe	4	0.018	0.072			
		Total	0.155		**Total**	0.293
Circuit Length:	150			250		
Circular mils:	6530			6530		
Volts dropped:	0.08			0.24		
Percent voltage drop:	**0.32%**			**1.01%**		

Building '26' (NAC-RL)

Device Type	Circuit: C1 Devices x Current		Total Current
EXISTING LOAD PER A#04-123090	1	0.18400	0.184
NEW DEVICES:			
75cd (Ceiling) Horn/Strobe	1	0.070	0.070
15cd (Ceiling) Strobe	1	0.018	0.018
		Total	0.272
Circuit Length:	450		
Circular mils:	6530		
Volts dropped:	0.40		
Percent voltage drop:	**1.69%**		

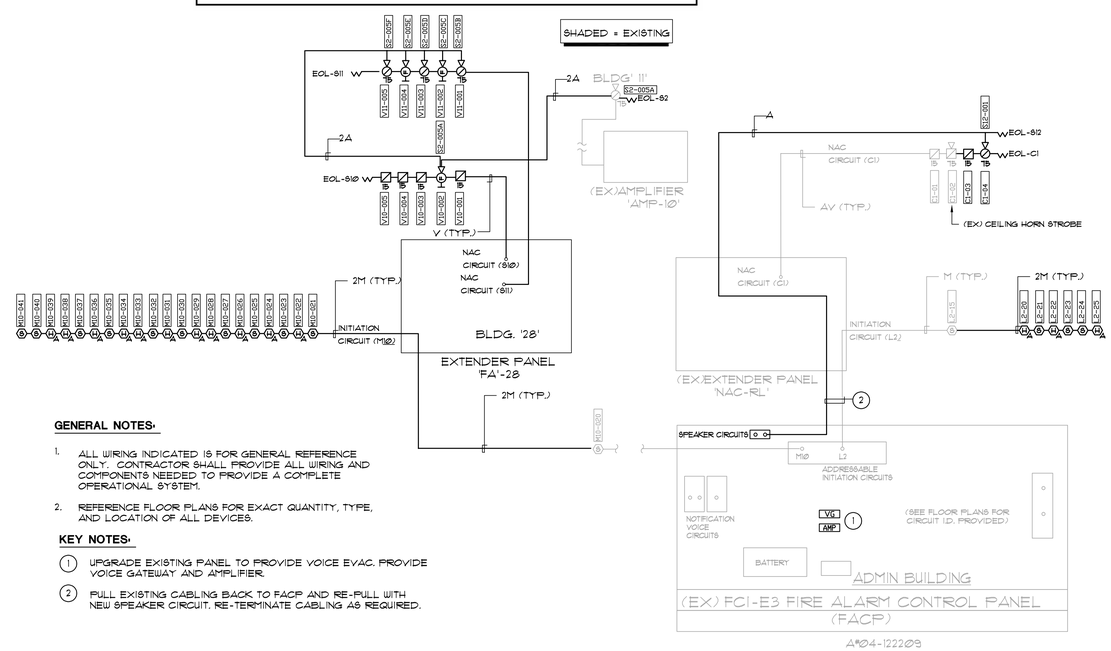

GENERAL NOTES:

1. ALL WIRING INDICATED IS FOR GENERAL REFERENCE ONLY. CONTRACTOR SHALL PROVIDE ALL WIRING AND COMPONENTS NEEDED TO PROVIDE A COMPLETE OPERATIONAL SYSTEM.
2. REFERENCE FLOOR PLANS FOR EXACT QUANTITY, TYPE, AND LOCATION OF ALL DEVICES.

KEY NOTES:

1. UPGRADE EXISTING PANEL TO PROVIDE VOICE EVAC. PROVIDE VOICE GATEWAY AND AMPLIFIER.
2. PULL EXISTING CABLING BACK TO FACP AND RE-PULL WITH NEW SPEAKER CIRCUIT. RE-TERMINATE CABLING AS REQUIRED.

FIRE ALARM RISER DIAGRAM

NO SCALE

1
E5.3

RELOCATABLE CLASSROOM BUILDINGS:

PROJECT No. :
5/22/2026 9:39:41 AM

DRAWN BY: CHECKED BY:
DELTA # _____ DATE _____ ADD AFO CCD REV
DELTA # _____ DATE _____ ADD AFO CCD REV
DELTA # _____ DATE _____ ADD AFO CCD REV
DELTA # _____ DATE _____ ADD AFO CCD REV

RELOCATABLE CLASSROOM BUILDINGS
1030 NARANCA AVE, EL CAJON, CA 92021
CAJON VALLEY UNION SCHOOL DISTRICT

FIRE ALARM RISER DIAGRAM AND CALCS

E5.3

American Modular Systems

SERIAL NUMBER
(1) 26-315-004 A WOOD FLOOR
(1) 26-315-005 A CONCRETE FLOOR

AMS-STOCKPILE
(2)12'x40' BUILDINGS

APPLICABLE CODES

PARTIAL LIST OF APPLICABLE CODES AS OF JANUARY 1, 2023

- 2022 CALIFORNIA ADMINISTRATIVE CODE (CAC) - PART 1, TITLE 24, CCR)
- 2022 CALIFORNIA BUILDING CODE (CBC), VOLUME 1 & 2 - (PART 2, TITLE 24 CCR) BASED ON THE 2021 INTERNATIONAL BUILDING CODE WITH 2022 CALIFORNIA AMENDMENTS
- 2022 CALIFORNIA ELECTRICAL CODE (CEC) - (PART 3, TITLE 24, CCR) BASED ON THE 2020 NATIONAL ELECTRIC CODE WITH 2022 CALIFORNIA AMENDMENTS
- 2022 CALIFORNIA MECHANICAL CODE (CMC) - (PART 4, TITLE 24, CCR) BASED ON THE 2021 IAPMO UNIFORM MECHANICAL CODE WITH 2022 CALIFORNIA AMENDMENTS
- 2022 CALIFORNIA PLUMBING CODE (CPC) - (PART 5, TITLE 24, CCR) BASED ON THE 2021 IAPMO UNIFORM PLUMBING CODE WITH 2022 CALIFORNIA AMENDMENTS
- 2022 CALIFORNIA ENERGY CODE (CEC) - (PART 6, TITLE 24, CCR)
- 2022 CALIFORNIA FIRE CODE (CFC) - (PART 9, TITLE 24, CCR) BASED ON THE 2021 INTERNATIONAL FIRE CODE WITH 2022 CALIFORNIA AMENDMENTS
- 2022 CALIFORNIA GREEN BUILDING CODE (CGC) - (PART 11, TITLE 24, CCR)
- 2022 CALIFORNIA REFERENCED STANDARDS CODE (PART 12, TITLE 24, CCR)
- ACCESSIBILITY TO MEET 2025 CBC

PARTIAL LIST OF APPLICABLE STANDARDS

NFPA 13	AUTOMATIC SPRINKLER SYSTEM	2022 EDITION
NFPA 14	STANDPIPE AND HOSE SYSTEMS	2019 EDITION
NFPA 17	DRY CHEMICAL EXTINGUISHING SYSTEMS	2021 EDITION
NFPA 17A	WET CHEMICAL EXTINGUISHING SYSTEMS	2021 EDITION
NFPA 20	STATIONARY PUMPS	2019 EDITION
NFPA 24	PRIVATE FIRE MAINS	2019 EDITION
NFPA 72	NATIONAL FIRE ALARM AND SIGNALING CODE (CALIFORNIA AMENDED) (NOTE: SEE UL STANDARD 1971 FOR "VISUAL DEVICES")	2022 EDITION
NFPA 253	CRITICAL RADIANT FLUX OF FLOOR COVERING SYSTEMS	2019 EDITION
NFPA 2001	CLEAN AGENT FIRE EXTINGUISHING SYSTEMS (CA AMMENDED)	2018 EDITION

GENERAL NOTES

1. SUBSTITUTION OF PRODUCTS OR PROCESSES WHICH CHANGE THE STRUCTURAL SAFETY, FIRE & LIFE-SAFETY, OR ACCESSIBILTY OF THIS BUILDING SHALL BE SUBMITTED TO THE DSA AS AN ADDENDUM OR CONSTRUCTION CHANGE DOCUMENT.
2. PC BUILDING APPROVED ONLY FOR OCCUPANCY "E" OR "B".
3. PC BUILDING EXITING IS BASED ON THE USE OR OCCUPANCY AND WILL BE REVIEWED AS SITE SPECIFIC.
4. PC BUILDINGS LOCATED IN FIRE HAZARD SEVERITY ZONES PER WILDLAND URBAN INTERFACE FIRE AREAS (WUI) SHALL CONFORM TO CBC CHAPTER 7A. PC IS NOT APPROVED FOR WUI.
5. AUTOMATIC SPRINKLER SYSTEMS MIGHT BE REQUIRED FOR SITE SPECIFIC PROJECTS. OPTIONAL AUTOMATIC FIRE SPRINKLER DESIGNS ARE NOT INCLUDED IN THIS PC APPROVAL. (NOTE: SEE BUILDING DATA THIS SHEET FOR FIRE SPRINKLER SYSTEM WEIGHT INCLUDED IN BUILDING DESIGN)
6. FIRE SERVICE UNDERGROUND SHALL BE REVIEWED AS A SITE SPECIFIC APPLICATION. WATER SUPPLY SHALL BE DESIGNED TO MEET THE PC SPRINKLER DEMAND REQUIREMENTS.
7. PROVIDE A SITE SPECIFIC FIRE FLOW LETTER OF CERTIFICATION FROM AN APPROVED WATER PURVEYOR OR LOCAL FIRE AUTHORITY.
8. THIS PC PLAN SHALL NOT BE USED TO HOUSE "ROOMS OR AREAS WITH SPECIAL HAZARDS" SUCH AS LABORATORIES, VOCATIONAL SHOPS AND OTHER SUCH AREAS NOT CLASSIFIED AS GROUP H, LOCATED IN GROUP E OCCUPANCIES.
9. NOT USED
10. IF THE STRUCTURE IS LOCATED IN AN AREA WITH LIQUEFIABLE SOIL OR SITE CLASS F, OVER-THE-COUNTER SUBMITTAL IS NOT ALLOWED AND SITE SPECIFIC PROJECT SUBMITTAL IS REQUIRED. IF THE SITE IS NOT IN A MAPPED LIQUEFACTION HAZARD ZONE, IT MAY BE PRESUMED THAT NO LIQUEFACTION HAZARD EXISTS ON THAT SITE UNLESS A SITE-SPECIFIC GEOTECHNICAL REPORT IDENTIFIES SUCH HAZARD.
11. THIS PC BUILDING IS NOT DESIGNED FOR FLOOD HAZARD AREAS. WHEN A SITE-SPECIFIC PROJECT IS LOCATED IN A FLOOD ZONE OTHER THAN ZONE X, A LETTER STAMPED AND SIGNED FROM A GEOTHECHNICAL ENGINEER IS NEEDED TO VALIDATE THAT THE ALLOWABLE SOIL VALUES SPECIFIED IN THE PC DRAWINGS ARE STILL APPLICABLE, UNLESS THE BOTTOMS OF FOUNDATIONS ARE RAISED ABOVE THE DESIGN FLOOD ELEVATION. A VALIDATION LETTER FROM THE GEOTHECNICAL ENGINEER SHALL BE PROVIDED, EVEN IF THE PRESUMPTIVE LOAD-BEARING VALUES PER CBC SECTION 1806A.2 ARE USED. PROJECT SHALL BE EXEMPT FROM THE VALIDATION LETTER FOR PROJECTS LOCATED IN ZONE D (UNDEFINED) IF THE APPLICANT PROVIDES EVIDENCE FROM THE LOCAL JURISDICTION OR A QUALIFIED DESIGN PROFESSIONAL CONFIRMING THAT THE SITE IS NOT IN A FLOOD HAZARD ZONE. LOCATION OF ELECTRICAL ELEMENTS SHALL CONFORM TO THE AMERICAN SOCIETY OF CIVIL ENGINEERS.
12. THE PLACEMENT OF THE PC BUILDING(S) ON OR ADJACENT TO SLOPES SHALL COMPLY WITH THE 'FOUNDATION CLEARANCES FROM SLOPES' SPECIFICATIONS FOUND ON SHEET N2.0 OF THESE DRAWINGS.
13. PC BUILDING SHALL NOT BE PLACED OR BE RELOCATED IN AREAS HAVING A NOISE CONTOUR GREATER THAN OR EQUAL TO 65 CNEL, OR IN AREAS EXPOSED TO A NOISE LEVEL OF 65 dB L_{eq}-1-hr DURING ANY HOUR OF OPERATION WHEN NOISE CONTOURS ARE NOT READILY AVAILABLE, AS SPECIFIED IN CALGREEN CODE, SECTION 5.507.4.1 & 5.507.4.1.1.
14. THIS PC BUILDING IS NOT DESIGNED FOR SNOW LOADS.
15. THIS PC BUILDING IS NOT DESIGNED FOR ICE LOADS.
16. BUILDING SHALL BE MANUFACTURED IN COMPLIANCE WITH CFC CHAPTER 33 FOR FIRE SAFETY DURING CONSTRUCTION.
17. SUBMITTAL AND APPROVAL OF A GEOHAZARD REPORT BY THE CALIFORNIA GEOLOGICAL SURVEY (CGS) IS NOT REQUIRED FOR SINGLE-STORY MODULAR BUILDINGS PROVIDED THAT THEY DO NOT EXCEED 4,000 SQUARE FEET IN PLAN AREA AND ARE NOT LOCATED WITHIN STATE OR LOCAL GEOLOGICAL HAZARD ZONES IN ACCORDANCE WITH IR A-4, SECTION 3.2.1.
18. THE DESIGN PROFESSIONAL HAS EXEMPTED RAMPS FROM SPECIAL INSPECTION REQUIREMENTS FOR MATERIAL IDENTIFICATION AND STRUCTURAL WELDING. RAMP SHALL NOT BE MODIFIED NOR HAVE SHIMS ADDED CAUSING THE DISTANCE BETWEEN THE HIGHEST RAMP WALKING SURFACE AND THE ADJACENT GRADE TO BE MORE THAN 30 INCHES. IF THIS CONDITION IS NOT MET, STRUCTURAL TESTING AND/OR INSPECTION WILL BE REQUIRED TO VERIFY MATERIALS AND STRUCTURAL WELDING. THIS APPLIES TO SCOPES OF WORK INCLUDING NEW CONSTRUCTION, ALTERATION, OR RELOCATION OF THE RAMP.
19. THIS PC WILL NOT BE PLACED ON ANY CAMPUS IN AND OF THE FOLLOWING LOCATIONS:
    - 19.1. WITHIN THE 65 CNEL NOISE CONTOUR OF AN AIRPORT.
    - 19.2. WITHIN THE 65 CNEL OR LDN NOISE CONTOUR OF A FREEWAY, EXPRESSWAY, RAILROAD OR INDUSTRIAL SOURCE GUIDEWAY.
    - 19.3. WHERE EXPOSED TO NOISE LEVELS OF 65 DB-LEQ-1-HOUR DURING ANY HOUR OF OPERATION.

© 2023 BY AMERICAN MODULAR SYSTEMS, INC.

ALL OF THE DRAWINGS AND DETAILS CONTAINED IN THIS PACKAGE ARE THE INTELLECTUAL PROPERTY OF AMS AND MAY NOT BE USED FOR CONSTRUCTION OR DESIGN BY ANOTHER ENTITY WITHOUT THE EXPRESS WRITTEN PERMISSION OF AMS.

COPYRIGHT: © 2023 BY AMERICAN MODULAR SYSTEMS, INC. ALL RIGHTS RESERVED. NO PART OF THIS DOCUMENT MAY BE REPRODUCED OR TRANSMITTED IN ANY FORM OR BY ANY MEANS, ELECTRONIC, MECHANICAL, PHOTOCOPYING, RECORDING, OR OTHERWISE, WITHOUT THE PRIOR WRITTEN PERMISSION OF AMERICAN MODULAR SYSTEMS, INC. CERTAIN ELEMENTS CONTAINED IN THESE DOCUMENTS ARE REGISTERED TRADEMARKS. ALL PATENTABLE MATERIALS CONTAINED IN THESE DOCUMENTS AND ORIGINATING WITH AMERICAN MODULAR SYSTEMS, INC. SHALL REMAIN THE SOLE PROPERTY OF AMERICAN MODULAR SYSTEMS, INC. SUBMITTAL OR DISTRIBUTION TO MEET OFFICIAL REGULATORY REQUIREMENTS WILL NOT BE CONSTRUED AS PUBLICATION IN DEROGATION OF AMERICAN MODULAR SYSTEM, INC.'S COPYRIGHT OR OTHER RESERVED INTELLECTUAL PROPERTY RIGHTS AND INTERESTS.

BUILDING DATA

OCCUPANCY	E OR B ~~(CLASSROOM USE FOR COLLEGE)~~
TYPE OF CONSTRUCTION	V-B (CATEGORY I & II)
WIND LOAD ASCE 7-16 SECTION28.5.3 SIMPLIFIED PROCEDURE	V = 99 MPH BASIC WIND SPEED EXPOSURE = C INTERNAL PRESSURE COEFF., GC_{Pi} = ±0.18 ROOF ANGLE = 9.5 DEGREES RISK CATEGORY II K_{ZT} = 1.00
ICE LOAD	NOT CONSIDERED (SEE GENERAL NOTE #15 THIS SHEET)
SNOW LOAD	NOT CONSIDERED (SEE GENERAL NOTE #14 THIS SHEET)
ROOF LIVE LOAD (MAX PSF)	20 (REDUCIBLE)
FLOOR LIVE LOAD (PSF)	☐ 50 ☒ 50+15 ☒ 100
RAMP LIVE LOAD (MAX PSF)	100 (1,000# CONCENTRATED LD)
DESIGN DEAD LOADS (MAX PSF)	21.0 RF - 12.0 WD FLR - 48.0 CONC. FLR - 18.0 EXT WALLS
FIRE SPRINKLER SYSTEM DESIGN WT.	1.5 PSF INCLUDED IN ROOF DESIGN DEAD LOADS ABOVE (SEE GENERAL NOTES #5 - #7 THIS SHEET)
ROOF SOLAR PANEL SYSTEM DESIGN WT.	3.0 PSF INCLUDED IN ROOF DESIGN DEAD LOADS ABOVE (SEE GENERAL NOTE #9 THIS SHEET)
ALLOWABLE SOIL PRESSURE (PSF)	1500 FOR CONCRETE FOUNDATION
FLOOD HAZARD AREA	NO (SEE GENERAL NOTE #11 THIS SHEET)
RAIN INTENSITY (IN/HR)	3"
BUILDING AREA (SQ. FT.)	480 SF EA BLDG
CLIMATE ZONE GROUP	☐ A (1,16) ☐ B (2-5) ☒ C (6-13) ☐ D (14,15) (REFER TO EN.1 FOR REQUIREMENTS)
MODULES	LIGHT MODULAR STEEL MOMENT-FRAMES PER CBC SECION 2212A
SYSTEM	12'x40' MODULE
FOUNDATION TYPE	☒ WOOD ☒ CONCRETE

SITE-SPECIFIC OPTIONS

FLOOR DECK	☒ 1⅛" PLYWOOD SHTG.	☐ BH-36 DECK 1½"x18 GA.	☒ 3WxH DECK 3"x18 GA.	
WALL STUDS	☒ WOOD	☐ LIGHT-GAUGE STEEL		
EXTERIOR WALL FINISH	☐ STUCCO	☐ SYNTHETIC STUCCO	☐ LAP SIDING	☒ DURATEMP 303
HVAC	☐ INTERIOR FLOOR MOUNTED	☒ EXTERIOR WALL MOUNTED	☐ SPLIT SYSTEM	
ROOFING	☒ 3" x 20 GA. STANDING SEAM	☐ 3" X 22 GA. STANDING SEAM OVER STRUCT. WOOD SHEATHING	☐ BUILT-UP ROOFING	☐ SINGLE-PLY
ROOF PITCH	☒ SINGLE PITCH	☐ DUAL PITCH		
ROOF DIAPHRAGM	☒ STEEL STRAP CROSS BRACING - SEE SHEET S4.0	☐ ½" SHEATHING - SEE SHEET S4.1		
FRONT OVERHANG	☐ NO	☒ YES - LENGTH: 5'-0"	ENCLOSED - 7'-0" MAX	
REAR OVERHANG	☐ NO	☒ YES - LENGTH: 2'-9"	ENCLOSED - 7'-0" MAX	
RAMP(S)	☐ NO	☒ YES (SEE SHEET S10.0)		
SOLATUBE ON ROOF	☒ NO	☐ YES		
FIRE SPRINKLERS	☒ NO	☐ YES (SEE GENERAL NOTES #5 - #7 THIS SHEET)		
PARAPETS	☒ NO	☐ YES (SEE SHEET S4.3)		
SOLAR PANELS	☒ NO	☐ YES (SEE GENERAL NOTE #9 THIS SHEET)		
OPTIONAL SIDE WALL CANOPY	☒ NO	☐ YES (SEE SHEET S5.4A)		
LIQUEFIABLE SOILS	☒ NO	☐ YES (SEE GENERAL NOTE #10 THIS SHEET)		
MAPPED GEOHAZARD ZONE	☒ NO	☐ YES (AS DEFINED BY PC-6 SECTION 1.8)		
GEOHAZARD REPORT	☒ NO	☐ YES		
IF YES	GEOTECHNICAL FIRM:			
	REPORT #:		REPORT DATE:	
GEOTECHNICAL REPORT	☒ NO	☐ YES	* REQUIRED IF BUILDING AREA > 4,000 SF	
IF YES	GEOTECHNICAL FIRM:			
	REPORT #:		REPORT DATE:	
	DEEPER FOOTINGS REQUIRED?	☐ NO	☐ YES - REQUIRED DEPTH:	
	WIDER FOOTINGS REQUIRED?	☐ NO	☐ YES - REQUIRED WIDTH:	
BELOW GRADE CONCRETE MIX DESIGN	DEFAULT CONCRETE MIX DESIGN FOR BELOW GRADE CONCRETE PER SHEET N1.0A.			
	OPTIONAL SITE-SPECIFIC CONCRETE MIX DESIGN FOR BELOW GRADE CONCRETE PER SHEET N1.0A.			

☐ THIS SHEET CONTAINS DESIGN OPTION BOXES AVAILABLE FOR SELECTION BASED ON SITE SPECIFIC REQUIREMENTS.

SEE SHEET TS2 FOR SHEET INDEX

SITE SPECIFIC WIND CRITERIA

SITE SPECIFIC BASIC WIND SPEED = 96 MPH WIND EXPOSURE = C

SITE SPECIFIC SEISMIC VALUES

SITE SPECIFIC S_S = 0.755 SITE SPECIFIC S_1 = 0.278 SITE CLASS = D- DEFAULT

(NOTE: SITE SHALL BE SITE CLASS "D" DEFAULT IF NO SOILS REPORT)

PC BUILDING SEISMIC DESIGN CRITERIA

I_e = 1.0 T = 0.231_S R = 3.5 (OMF) RISK CATEGORY II
Ω_O = 3.0 C_d = 3.0 ρ = 1.3 SEISMIC DESIGN CATEGORY: D (S_1 < 0.75)
E (S_1 ≥ 0.75)

MAXIMUM STORY DRIFT RATIO = 2.0% (I.E. MAX DRIFT = 0.020 x THE HEIGHT UNDER CONSIDERATION.)
LATERAL FORCE RESISTING SYSTEM: LIGHT MODULAR STEEL MOMENT FRAMES PER 2212A
ANALYSIS PROCEDURE: EQUIVALENT LATERAL FORCE

NOTE:
COMPONENTS AND CLADDING DESIGNED FOR:
S_{DS} = 1.30

☒ NO SOILS REPORT - ASSUMED SITE CLASS "D" DEFAULT

S_S = 1.631 MAX (SITE)
1.631 (DESIGN)
F_a= 1.2
S_{DS} = 1.30 MAX (SITE)
1.30 (DESIGN)
S_1 = 1.147 MAX (SITE & DESIGN) F_v= 1.7 S_{D1} = 1.30 MAX (SITE & DESIGN) C_S = 0.485 W (DESIGN)*

☐ WITH SOILS REPORT - SITE CLASS "A", "B" OR "D"

NOTE: GROUND MOTION HAZARD ANALYSIS IS NOT REQUIRED WHERE THE VALUE OF THE PARAMETERS S IS INCREASED BY 50% FOR ALL APPLICATIONS OF SM1 (ASCE 7-16 w/SUPPLEMENT #3, SECTION 11.4.8, EXCEPTION1)

S_S = 1.955 MAX (SITE)
1.955 (DESIGN)
F_a= 1.0
S_{DS} = 1.30 MAX (SITE)
1.30 (DESIGN)*
S_1 = 1.147 MAX (SITE & DESIGN) F_v= 1.7 S_{D1} = 1.30 MAX (SITE & DESIGN) C_S = 0.485 W (DESIGN)*

☐ WITH SOILS REPORT - SITE CLASS "C"

S_S = 1.631 MAX (SITE)
1.631 (DESIGN)
F_a= 1.2
S_{DS} = 1.30 MAX (SITE)
1.30 (DESIGN)
S_1 = 1.393 MAX (SITE & DESIGN) F_v= 1.4 S_{D1} = 1.30 MAX (SITE & DESIGN) C_S = 0.485 W (DESIGN)*

☐ WITH SOILS REPORT - SITE CLASS "E"

NOTE: GROUND MOTION HAZARD ANALYSIS IS NOT REQUIRED WHERE THE EQUIVALENT LATERAL FORCE PROCEDURE IS USED FOR DESIGN AND THE VALUE OF C_s IS DETERMINED BY EQ (12.8-2) FOR ALL VALUES OF *T* (ASCE 7-16 w/SUPPLEMENT #3, SECTION 11.4.8, EXCEPTION 2) SEE GENERAL NOTE #10.

S_S = 1.625 MAX (SITE)
1.625 (DESIGN)
F_a= 1.2
S_{DS} = 1.30 MAX (SITE)
1.30 (DESIGN)
S_1 = 0.975 MAX (SITE & DESIGN) F_v= 2.0 S_{D1} = 1.30 MAX (SITE & DESIGN) C_S = 0.485 W (DESIGN)*

☐ WITH SOILS REPORT - SITE CLASS "F"

PER ASCE 7-16 SECTION 11.4.8, A SITE REPONSE ANALYSIS IN ACCORDANCE WITH SECTION 21.1 IS REQUIRED UNLESS EXEMPTED BY SECTION 20.3.1. SEE GENERAL NOTE #3.

SITE SPECIFIC S_{DS} = _____ S_{DS} = S_{D1} = 1.30 MAX C_S = 0.485 W (DESIGN)*

SITE SPECIFIC S_{D1} = _____ * - BASE SHEAR (INCLUDES 'ρ')

*PER ASCE 7-16, SECTION 12.8.1.3:
THE VALUE OF C_S AND E_V ARE PERMITTED TO BE CALCULATED USING A VALUE OF S_{DS} EQUAL TO 1.0, BUT NOT LESS THAN 70% OF S_{DS} AS DEFINED IN SECTION 11.4.5, PROVIDED THAT ALL OF THE FOLLOWING CRITERIA ARE MET:

1. STRUCTURE DOES NOT HAVE IRREGULARITIES;
2. STRUCTURE DOES NOT EXCEED FIVE (5) STORIES ABOVE THE LOWER OF THE BASE OR GRADE PLANE;
3. STRUCTURE HAS A FUNDAMENTAL PERIOD, T, THAT DOES NOT EXCEED 0.5 SECONDS;
4. STRUCTURE MEETS REQUIREMENTS FOR REDUNDANCY FACTOR, ρ, TO BE TAKEN AS 1.0;
5. SITE SOIL PROPERTIES ARE NOT CLASSIFIED AS SITE CLASS 'E' OR 'F';
6. STRUCTURE IS CLASSIFIED AS RISK CATEGORY II.
7. WHEN SITE SPECIFIC GROUND MOTION PROCEDURE IS REQUIRED PER 11.4.8, SITE-SPECIFIC PROJECTS ARE NOT ALLOWED FOR OTC SUBMITTAL.
8. FOR SITE SPECIFIC, ADHERE TO SITE NOTES ON PC, SHEET N5.0

IDENTIFICATION STAMP
DIV. OF THE STATE ARCHITECT
APP: 04-125522 INC:
REVIEWED FOR
SS ☑ FLS ☑ ACS ☑
DATE: 08/19/2026

American Modular Systems
787 Spreckels Ave., Manteca, CA 95336
Phone (209) 825-1921 Fax (209) 825-7018
www.americanmodular.com

INTELLECTUAL-PROPERTY & PROPRIETARY RIGHTS STATEMENT
COPYRIGHT © AMERICAN MODULAR SYSTEMS (AMS)
AMS OWNS ALL COPYRIGHT AND OTHER INTELLECTUAL-PROPERTY AND PROPRIETARY RIGHTS IN THESE DRAWINGS, SPECIFICATIONS, AND THE MATERIAL CONTAINED HEREIN. CERTAIN ELEMENTS SHOWN IN THESE DOCUMENTS ARE REGISTERED TRADEMARKS OF AMS. ALL PATENTABLE MATERIALS CONTAINED IN THESE DOCUMENTS AND ORIGINATING WITH AMS WILL REMAIN THE SOLE PROPERTY OF AMS. THESE DRAWING, SPECIFICATIONS AND THE MATERIAL CONTAINED HEREIN MAY NOT BE REPRODUCED, TRANSMITTED, COPIED, DISTRIBUTED, MODIFIED, OR OTHERWISE DISPOSED OF (DIRECTLY OR INDIRECTLY) AND MAY NOT BE USED (IN WHOLE OR IN PART) TO ASSIST IN THE CONSTRUCTION, DESIGN, OR OTHER MAKING OF, OR FOR THE PURPOSE OF FURNISHING ANY INFORMATION FOR THE CONSTRUCTION, DESIGN, OR OTHER MAKING OF, ANY BUILDINGS (MODULAR OR OTHERWISE), DRAWINGS, SPECIFICATIONS, PRINTS, APPARATUS, OR PARTS THEREOF, EXCEPT AS EXPRESSLY PERMITTED BY WRITTEN CONSENT OF, OR IN A WRITTEN AGREEMENT WITH, AMS. SUBMITTAL OR DISTRIBUTION TO MEET OFFICIAL REGULATORY REQUIREMENTS WILL NOT BE CONSTRUED AS PUBLICATION IN DEROGATION OF AMS'S COPYRIGHT OR OTHER INTELLECTUAL-PROPERTY OR PROPRIETARY RIGHTS.

PRE-CHECKED SET NAME
12' x 40' STANDARD MODULAR BUILDING
FORM®

SITE SPECIFIC PROJECT NAME
AMS STOCKPILE
(1) 12'-X40' BUILDING
(1) 12'-X40' RESTROOM

MANUFACTURER PROFESSIONAL OF RECORD
LICENSED ARCHITECT
MICHAEL PATRICK RAYNOR
No. C12631
Rem. 3-31-27
STATE OF CALIFORNIA

THESE DRAWINGS ARE PRELIMINARY AND NOT FOR CONSTRUCTION UNLESS STAMPED & SIGNED BY THE DESIGN PROFESSIONAL OF RECORD.

REVISIONS
1
2
3
4

DRAWN BY:	RA
SCALE:	AS NOTED
DATE:	13/04/2026
PROJECT NO:	2020-26

SHEET TITLE:
TITLE SHEET

SHEET NUMBER:
TS

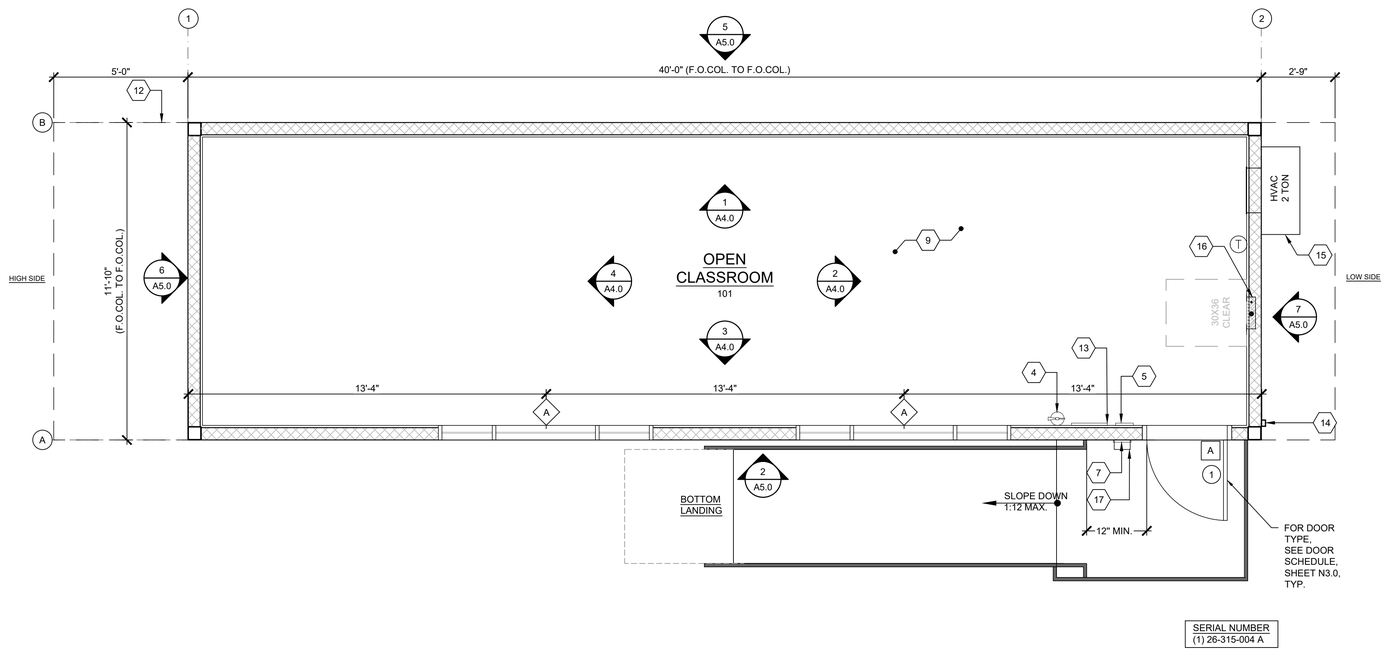

SERIAL NUMBER
(1) 26-315-004 A

TYPICAL FLOOR PLAN

SCALE: 3/8" = 1'-0"

A

1. NOT USED
2. NOT USED
3. NOT USED
4. FIRE EXTINGUISHER - TOP OF HANDLE @ +46" A.F.F.
   4" MAX PROTRUSION FROM WALL IF BOTTOM OF FIRE EXTINGUISHER IS ABOVE 27" A.F.F.
5. TACTILE EXIT SIGN PER DETAIL 10/N4.0 (BY OTHERS)
6. NOT USED
7. ROOM SIGNAGE AND I.S.A. PER DETAILS 5&9/N4.0 (BY OTHERS)
8. NOT USED
9. FLOORING (BY OTHERS)
10. NOT USED
11. NOT USED
12. OVERHANG
13. OCCUPANT LOAD SIGN PER DETAIL 11/N4.0 (BY OTHERS).
14. DOWNSPOUT - DISCHARGE TO SPLASH BLOCK (U.O.N.)
    (QUANTITY AND LOCATION MAY VARY)
15. HVAC - SEE MECHANICAL
16. ELECTRICAL PANEL (LOCATION MAY VARY)
17. EXTERIOR LIGHT-SEE ELECTRICAL
18. NOT USED
19. ASSISTIVE LISTENING (AL) SIGN POSTED IN PROMINENT PLACE AT OR NEAR THE ENTRANCE PER 17/N4.0.

KEYNOTES

1. ~~OPTIONAL INTERIOR WALLS MAY OCCUR THROUGHOUT THE BUILDING AS CONSTRUCTED PER SHEETS S8.1 OR S9.1. THE PC TITLE 24 HAS BEEN RUN FOR THE WORST CASE ENVELOPE BASED ON AREA.~~
2. ~~PANIC HARDWARE COMPLYING WITH C.B.C. 1010.2.9 IS REQUIRED TO BE INSTALLED WHEN THE CONFIGURATION OF ANY ROOM PROVIDES AN OCCUPANT LOAD OF 50 OR GREATER.~~
3. FOR ROOMS OR SPACES FOR ROOMS OR SPACES USED FOR ASSEMBLY, CLASSROOM, DINING, DRINKING, OR SIMILAR PURPOSES HAVING AN OCCUPANT LOAD OF 50 OR MORE. PROVIDE AN OCCUPANT LOAD SIGN (BY OTHERS) IN A CONSPICUOUS PLACE, NEAR THE MAIN EXIT, PER C.B.C. SECTION 1004.9.
4. ALL PRIMARY EXTERIOR DOOR ENTRIES SHALL BE COVERED TO PREVENT WATER INTRUSION BY USING NONABSORBENT FLOOR AND WALL FINISHES WITHIN AT LEAST 2 FEET AROUND AND PERPENDICULAR TO OPENING, PER CALGREEN, SECTION 5.407.2.2.1.
5. PRIMARY EXTERIOR DOOR ENTRIES SHALL HAVE AT LEAST ONE OF THE FOLLOWING:
   - INSTALLED AWNING AT LEAST 4 FEET IN DEPTH (BY OTHERS).
   - OPTIONAL SIDE WALL CANOPY (4 FEET IN DEPTH) PER SHEET S5.4A.
   - ROOF OVERHANG AT LEAST 4 FEET IN DEPTH.
   - DOOR RECESSED AT LEAST 4 FEET.
   - OTHER METHODS WHICH PROVIDE EQUIVALENT PROTECTION (BY OTHERS).
6. WINDOW PLACEMENT & SIZE MAY VARY AS THE PC TITLE 24 HAS BEEN RUN FOR THE WORST CASE ENVELOPE PROVIDED THAT THE MAXIMUM WINDOW AREA IS 160 SQ.FT.
7. ALL RESTROOM AND SINK ACCESSORIES NOT SHOWN HERE MUST BE COORDINATED BY THE PROJECT AOR/DISTRICT BEFORE SUBMITTING SITE-SPECIFIC PLANS TO DSA FOR REVIEW.
8. AUTOMATIC DAYLIGHT CONTROLS AS PRESCRIBED ON THIS PLAN ARE ONLY REQUIRED WHEN THE SOLATUBE OPTION IS UTILIZED. REFER TO ENERGY NOTE #2 OF THIS SHEET FOR FURTHER ASSISTANCE.
9. ~~SOLATUBE LOCATIONS SHOWN ON PLAN ARE GENERIC AND ACTUAL LOCATIONS MAY VARY - (4) MAX. PER MOD. FRAMING FOR SOLATUBES SHALL BE PER S4.0 AND S4.1. INSTALLATION SHALL BE PER DETAILS 1 OR 15/M1.6. PC TITLE 24 RUNS FOR SOLAR TUBE(S) ASSUME WORSE CASE LAYOUT.~~
10. ~~WHEN SOLATUBES ARE UTILIZED ABOVE A CLASSROOM, THE ENTIRE CLASSROOM SHALL BE CONSIDERED AS A "DAYLIT" ZONE.~~

SITE NOTE

3/16:12 (1%) MINIMUM TO 1/4:12 (2%) MAXIMUM GRADE FROM FACE OF BUILDING MUST BE ADHERED TO FOR WATER RUN-OFF. PONDING MAY OCCUR AROUND THE PERIMETER OF THE BUILDING.

SHEET NOTES

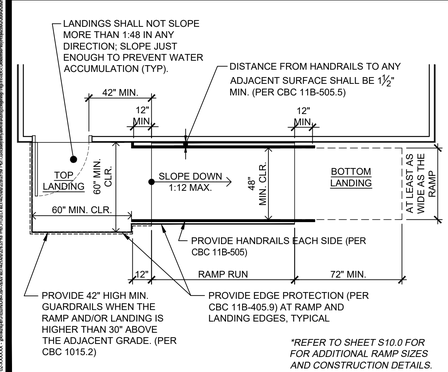

**REFER TO SHEET S10.0 FOR FOR ADDITIONAL RAMP SIZES AND CONSTRUCTION DETAILS.*

TYPICAL RAMP PLAN - OPTIONAL

SCALE: 1/4" = 1'-0"

16

2X6 WALLS

WALL LEGEND

- X/# = MECHANICAL OR PLUMBING FIXTURE - SEE MECHANICAL OR PLUMBING DRAWINGS
- X = KEY NOTE - SEE KEY NOTES ABOVE
- X = DOOR TYPE - SEE SCHEDULE, SHEET N3.0
- X = DOOR HARDWARE - SEE HARDWARE SCHEDULE, SHEET N3.0
- X = WINDOW TYPE - SEE SCHEDULE, SHEET N3.0

SYMBOLS LEGEND

17

ENERGY CONTROLS

1. DEMAND RESPONSE CONTROLS:
   ONLY REQUIRED IN BUILDINGS LARGER THAN 10,000 S.F., THEREFORE, NOT REQUIRED FOR THIS PC.
2. AUTOMATIC DAYLIGHTING CONTROLS:
   NOT REQUIRED IN ROOMS WHERE COMBINED INSTALLED LIGHTING POWER IN COMBINED SKYLIT & PRIMARY DAYLIT ZONES ARE <120 WATTS. INSTALLED WATTAGE IN PRIMARY SIDELIT DAY LIT ZONE IS 90 WATTS (2x 45w, AS SHOWN ON SHEET E1.0). THEREFORE, AUTOMATIC DAYLIGHTING CONTROLS ARE ONLY REQUIRED WHEN "SOLATUBES" ARE INSTALLED.
3. ENERGY MANAGEMENT CONTROL SYSTEM (EMCS) CONNECTION:
   PER TITLE 24 CODE, "AN EMCS MAY BE INSTALLED TO COMPLY WITH THE REQUIREMENTS OF ONE OR MORE LIGHTING CONTROLS IF IT MEETS THE MINIMUM REQUIREMENTS". PC MAY CONTAIN OCCUPANCY SENSORS AND PHOTOCELL CONTROL LIGHTING, IN THAT CASE, AN EMCS IS NOT REQUIRED FOR THIS PC.

NOTE:
ANY MONITORING EQUIPMENT OR ASSOCIATED SENSORS ARE SITE SPECIFIC AND ARE NOT INCLUDED IN THE BASE PC.

ENERGY NOTES

ACOUSTIC CONTROLS

1. WHEN THE PRE-CHECK (PC) BUILDING IS SITE ADAPTED, THE BUILDING AND SITE FEATURES SHALL COMPLY WITH THE CALGREEN CODE, SECTION 5.507.4, FOR THE SPECIFIC SITE LOCATION.
2. MINIMUM WALL ASSEMBLIES:
   WALL ASSEMBLIES SHALL BE CONSTRUCTED PER DETAIL SHEETS A5.1, A5.3, & A8.0, WITH EITHER 2x4 WOOD STUDS.
   MINIMUM STC RATINGS LISTED BELOW ARE PER THE CATALOG OF STC & IIC RATINGS FOR WALL AND FLOOR/CEILING ASSEMBLIES, PRODUCED BY THE OFFICE OF NOISE CONTROL, CA DEPARTMENT OF HEALTH SERVICES.

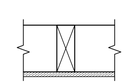

(1) LAYER 1/2" GYPSUM BOARD
SECURED TO MIN. 2x4 STUDS @ 16"
O.C. MAX.

STC=28
(CATALOG SECTION 1.2.1.5.4.1)
TEST REF.: NATIONAL RESEARCH
COUNCIL OF CANADA - NRC #66

3. IN THE EVENT THAT A PC CLASSROOM IS DESIGNED TO CONNECT TO ANOTHER PC CLASSROOM OR RESTROOM, INTERIOR SOUND TRANSMISSION IN THE INTERIOR ADJOINING WALL AND FLOOR/CEILING SHALL MEET THE MINIMUM REQUIREMENT OF A STC OF 40, PER CALGREEN CODE SECTION 507.4.3. (EXAMPLES OF QUALIFYING ASSEMBLIES SHOWN BELOW).

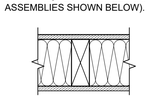

(2) LAYER 5/8" GYPSUM BOARD
SECURED TO MIN. 2x4 STUDS @ 24"
O.C. MAX. w/ 3½" THK. BATT
INSULATION

STC=40
TEST REF.: AUDIO ALLOY L.L.C TEST
NUMBER: OL-05-1003

4. MINIMUM WINDOW & DOOR RATINGS:
   ALL WINDOWS AND DOORS SPECIFIED ON THE SCHEDULES FOUND ON SHEET N3.0 OF THIS PACKAGE SHALL MEET A MINIMUM STC RATING OF 27.

ACOUSTIC NOTES

IDENTIFICATION STAMP
DIV. OF THE STATE ARCHITECT
APP: 04-125522 INC:
REVIEWED FOR
SS ☑ FLS ☑ ACS ☑
DATE: 08/19/2026

American Modular Systems
787 Spreckels Ave., Manteca, CA 95336
Phone (209) 825-1921 Fax (209) 825-7018
www.americanmodular.com

INTELLECTUAL-PROPERTY & PROPRIETARY RIGHTS STATEMENT
COPYRIGHT © AMERICAN MODULAR SYSTEMS (AMS)
AMS OWNS ALL COPYRIGHT AND OTHER INTELLECTUAL-PROPERTY AND PROPRIETARY RIGHTS IN THESE DRAWINGS, SPECIFICATIONS, AND THE MATERIAL CONTAINED HEREIN. CERTAIN ELEMENTS SHOWN IN THESE DOCUMENTS ARE REGISTERED TRADEMARKS OF AMS. ALL PATENTABLE MATERIALS CONTAINED IN THESE DOCUMENTS AND ORIGINATING WITH AMS WILL REMAIN THE SOLE PROPERTY OF AMS. THESE DRAWING, SPECIFICATIONS, AND THE MATERIAL CONTAINED HEREIN MAY NOT BE REPRODUCED, TRANSMITTED, COPIED, DISTRIBUTED, MODIFIED, OR OTHERWISE DISPOSED OF (DIRECTLY OR INDIRECTLY) AND MAY NOT BE USED (IN WHOLE OR IN PART) TO ASSIST IN THE CONSTRUCTION, DESIGN, OR OTHER MAKING OF, OR FOR THE PURPOSE OF FURNISHING ANY INFORMATION FOR THE CONSTRUCTION, DESIGN, OR OTHER MAKING OF, ANY BUILDINGS (MODULAR OR OTHERWISE), DRAWINGS, SPECIFICATIONS, PRINTS, APPARATUS, OR PARTS THEREOF, EXCEPT AS EXPRESSLY PERMITTED BY WRITTEN CONSENT OF, OR IN A WRITTEN AGREEMENT WITH, AMS. SUBMITTAL OR DISTRIBUTION TO MEET OFFICIAL REGULATORY REQUIREMENTS WILL NOT BE CONSTRUED AS PUBLICATION IN DEROGATION OF AMS'S COPYRIGHT OR OTHER INTELLECTUAL-PROPERTY OR PROPRIETARY RIGHTS.

PRE-CHECKED SET NAME
12' x 40' STANDARD MODULAR BUILDING

FORM®

SITE SPECIFIC PROJECT NAME
AMS STOCKPILE
(1) 12'-X40' BUILDING
(1) 12'-X40' RESTROOM

MANUFACTURER PROFESSIONAL OF RECORD
LICENSED ARCHITECT
ANDRAY PATRICK CONWAY
No. C12631
Ren. 3-31-27
STATE OF CALIFORNIA

THESE DRAWINGS ARE PRELIMINARY AND NOT FOR CONSTRUCTION UNLESS STAMPED & SIGNED BY THE DESIGN PROFESSIONAL OF RECORD.

REVISIONS
1
2
3
4

DRAWN BY:	RA
SCALE:	AS NOTED
DATE:	14/04/2026
PROJECT NO:	2020-26

SHEET TITLE:
TYPICAL FLOOR PLAN

SHEET NUMBER:
A1.0

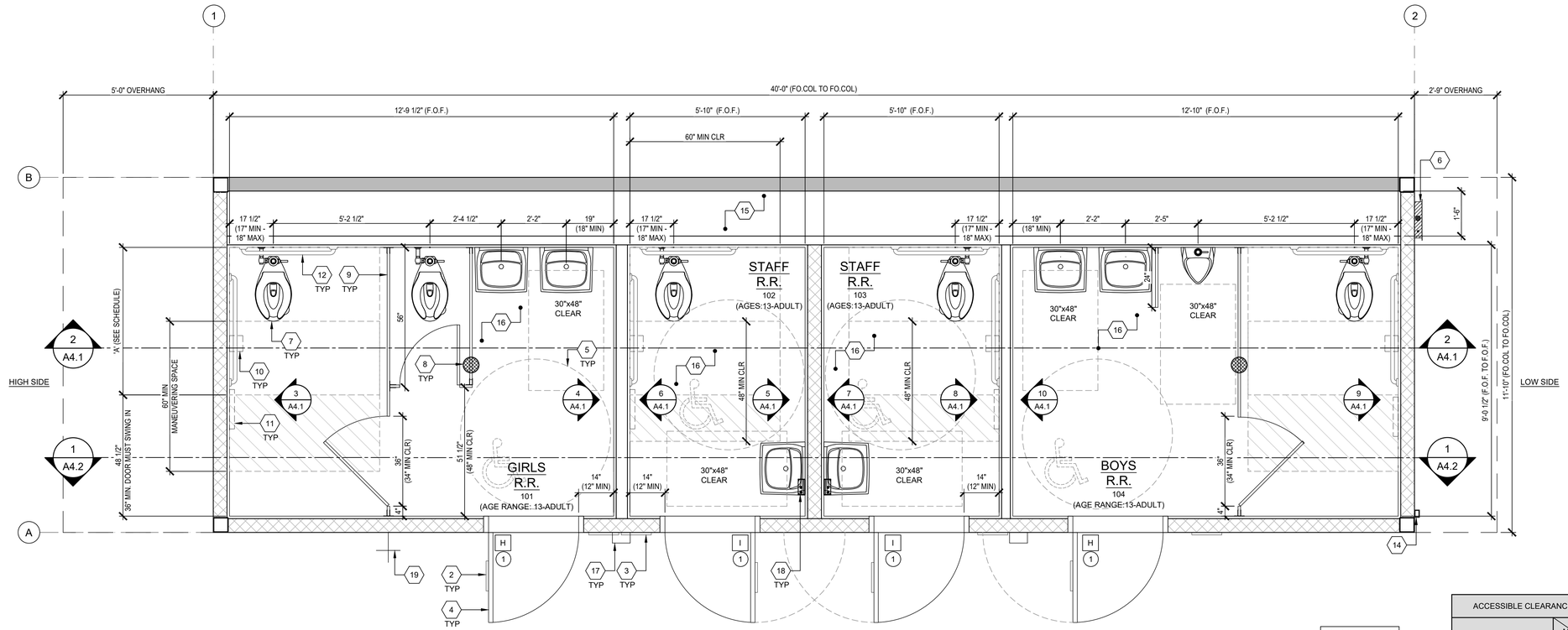

ACCESSIBLE CLEARANCE FOR WATER CLOSETS			
		WALL MOUNTED	FLOOR MOUNTED
'A'	CHILDREN	59" MIN.	59" MIN.
	NON-CHILDREN	56" MIN.	59" MIN.

1. ACCESSIBLE TOILET COMPARTMENT"S SHALL HAVE A MANEUVERING SPACE COMPLYING WITH 2019 CBC SECTION 11B-604.8.1.1.
2. THE TABLE ABOVE IS A LIST OF REQ'D WATER CLOSET CLEARANCE. THE W.C. MANEUVERING SPACE IS LOCATED IN FRONT OF THE W.C. AND IS DESCRIBED IN 11B-604.8.1.1.1, 11B-604.8.1.1.2 AND 11B-604.8.1.1.3 DEPENDING ON IF THE DOOR IS END-OPENING OR SIDE-OPENING AND DIRECTION OF SWING.
3. THE MANEUVERING CLEARANCE FOR ALL ACCESSIBLE TOILET COMPARTMENTS SHOWN IN THESE PLANS SHALL COMPLY WITH 11B-604.8.1.1.1 (IN-SWINGING) & 11B-604.8.1.1.2. (SIDE-OPENING)
4. THE ACCESSIBLE COMPARTMENT DOOR IS NOT PERMITTED TO SWING OVER CLEARANCE SCHEDULED 'A'

SERIAL NUMBER
(1) 26-315-005 A

RESTROOM FLOOR PLAN

SCALE : 1/2"=1'-0" 2

1. RESTROOM CONFIGURATION MAY VARY.
2. RESTROOM MODULE OCCURS AT END OF BUILDING WHEN COMBINED WITH OTHER MODULES. SINGLE RESTROOMS MAY OCCUR IN ANY PART OF A BUILDING.
3. NOT USED.
4. INTERIOR WALLS MAY OCCUR THROUGHOUT BUILDING. REFER TO SHEET S8.1 FOR ATTACHMENTS.
5. REFER TO SCHEDULE 10/P2.0 FOR ACCESSIBLE HEIGHTS AND DIMENSIONS. AGE 13-ADULT IS SHOWN
6. REFER TO DETAILS 1, 3, 4 & 5, SHEET A7.2 FOR TOILET PARTITION ANCHORAGE BLOCKING.
7. PROVIDE FIRE BLOCKING PER DETAIL 5, SHEET M1.5.
8. SEWER AND WATER STUB OUTS SHALL BE LOCATED WITHIN THE ALLOWABLE AREA AS SHOWN ON PLANS AND CONNECTIONS SHALL BE EASILY ACCESSIBLE FOR FUTURE RELOCATION. STUB OUT HEIGHT SHALL BE COORDINATED BY THE MANUFACTURER.
9. PIPING MATERIAL:
   A. WATER: COPPER TYPE "L", 95/5 SOLDER.
   B. WASTE DRAIN AND VENT: ABS.
10. TOILET COMPARTMENT DOORS LOCATED IN THE FRONT PARTITION SHALL BE 4" MAXIMUM FROM THE SIDE WALL OR PARTITION FARTHEST FROM THE WATER CLOSET, PER C.B.C. SECTION 11B-604.8.1.2.

PLUMBING NOTE

MODULAR MFR. TO STUB THROUGH FLOOR ALL PLUMBING LINES - BUILDING PERIMETER POC'S SHOWN ARE FOR COORDINATION PURPOSES ONLY - ALL UNDER-FLOOR CONNECTIONS ARE BY SITE CONTRACTOR UON.

SITE NOTE

3/16:12 (1%) MINIMUM TO 1/4:12 (2%) MAXIMUM GRADE FROM FACE OF BUILDING MUST BE ADHERED TO FOR WATER RUN-OFF. PONDING MAY OCCUR AROUND THE PERIMETER OF THE BUILDING.

SHEET NOTES

1. NOT USED
2. DOOR SIGNAGE PER 2, 7 OR 8/N4.0 (BY OWNER)
3. RESTROOM I.D. SIGNAGE (BY OTHERS) PER DETAILS 1,3 OR 6, SHEET N4.0
4. TYPICAL DOOR PER SCHEDULE ON SHEET N3.0.
5. 60" CLEAR TURNING SPACE
6. ELECTRICAL PANEL (LOCATION MAY VARY)
7. PLUMBING FIXTURE PER P1.0
8. FLOOR DRAIN (LOCATION MAY VARY) - PER P1.0. 1:48 FLOOR SLOPE MAX
9. TOILET PARTITIONS (ACCURATE, SOLID PLASTIC, OR EQUAL) PER P2.0
10. TOILET TISSUE DISPENSER (BRADLEY MODEL 508-32, OR EQUAL) PER P2.0
11. TOILET SEAT COVER DISPENSER (BOBRICK MODEL B-221, OR EQUAL) PER P2.0
12. GRAB BARS - SEE 6/A7.1
13. NOT USED
14. DOWNSPOUT - DISCHARGE TO SPLASH BLOCK (U.N.O.) (QUANTITY AND LOCATION MAY VARY)
15. PLUMBING CHASE
16. CERAMIC TILE
17. EXTERIOR LIGHT
18. INSTANT TEMPERATURE TANK -LESS WATER HEATER SEE 7/P2.0
19. HOSE BIB-SEE P1.0
20. TYP. DRAFT STOP AT 10'-0" O.C. PER DETAIL 5/M1,5 AND AT CEILING LEVEL PER DETAIL 4/M1.5

KEYNOTES

SCALE : 1/4"=1'-0" 4

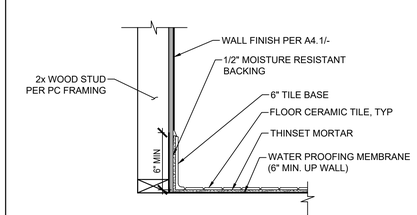

PROTETCTION OF WOOD WALLS @ TOILET RM

SCALE : 1/4"=1'-0" 5

1 = KEY NOTE - SEE KEY NOTES, THIS SHEET

X = DOOR TYPE - SEE SCHEDULE SHEET N3.0

X = DOOR HARDWARE - SEE HARDWARE SCHEDULE SHEET N3.0

= 60" DIAMETER CLEAR FLOOR TURNING SPACE

= 30"x48" CLEAR FLOOR SPACE

SYMBOLS LEGEND

NO HATCH

2X4 WALLS

2X6 WALLS

FIRE-RATED WALL

WALL LEGEND

IDENTIFICATION STAMP
DIV. OF THE STATE ARCHITECT
APP: 04-125522 INC:
REVIEWED FOR
SS ☑ FLS ☑ ACS ☑
DATE: 08/19/2026

American Modular Systems
787 Spreckels Ave., Manteca, CA 95336
Phone (209) 825-1921 Fax (209) 825-7018
www.americanmodular.com

INTELLECTUAL-PROPERTY & PROPRIETARY RIGHTS STATEMENT
COPYRIGHT © AMERICAN MODULAR SYSTEMS (AMS)
AMS OWNS ALL COPYRIGHT AND OTHER INTELLECTUAL-PROPERTY AND PROPRIETARY RIGHTS IN THESE DRAWINGS, SPECIFICATIONS, AND THE MATERIAL CONTAINED HEREIN. CERTAIN ELEMENTS SHOWN IN THESE DOCUMENTS ARE REGISTERED TRADEMARKS OF AMS. ALL PATENTABLE MATERIALS CONTAINED IN THESE DOCUMENTS AND ORIGINATING WITH AMS WILL REMAIN THE SOLE PROPERTY OF AMS. THESE DRAWING, SPECIFICATIONS, AND THE MATERIAL CONTAINED HEREIN MAY NOT BE REPRODUCED, TRANSMITTED, COPIED, DISTRIBUTED, MODIFIED, OR OTHERWISE DISPOSED OF (DIRECTLY OR INDIRECTLY) AND MAY NOT BE USED (IN WHOLE OR IN PART) TO ASSIST IN THE CONSTRUCTION, DESIGN, OR OTHER MAKING OF, OR FOR THE PURPOSE OF FURNISHING ANY INFORMATION FOR THE CONSTRUCTION, DESIGN, OR OTHER MAKING OF, ANY BUILDINGS (MODULAR OR OTHERWISE), DRAWINGS, SPECIFICATIONS, PRINTS, APPARATUS, OR PARTS THEREOF, EXCEPT AS EXPRESSLY PERMITTED BY WRITTEN CONSENT OF, OR IN A WRITTEN AGREEMENT WITH, AMS. SUBMITTAL OR DISTRIBUTION TO MEET OFFICIAL REGULATORY REQUIREMENTS WILL NOT BE CONSTRUED AS PUBLICATION IN DEROGATION OF AMS'S COPYRIGHT OR OTHER INTELLECTUAL-PROPERTY OR PROPRIETARY RIGHTS.

PRE-CHECKED SET NAME
12' x 40' STANDARD MODULAR BUILDING

FORM®

SITE SPECIFIC PROJECT NAME
AMS STOCKPILE
(1) 12'-X40' BUILDING
(1) 12'-X40' RESTROOM

MANUFACTURER PROFESSIONAL OF RECORD

LICENSED ARCHITECT
RAYMOND PATRICK GRANAHAN
No. C12631
Ren. 3-31-27
STATE OF CALIFORNIA

THESE DRAWINGS ARE PRELIMINARY AND NOT FOR CONSTRUCTION UNLESS STAMPED & SIGNED BY THE DESIGN PROFESSIONAL OF RECORD.

REVISIONS
1
2
3
4

DRAWN BY:	RA
SCALE:	AS NOTED
DATE:	14/04/2026
PROJECT NO:	2020-26

SHEET TITLE:
RESTROOM FLOOR PLAN

SHEET NUMBER:
A1.2

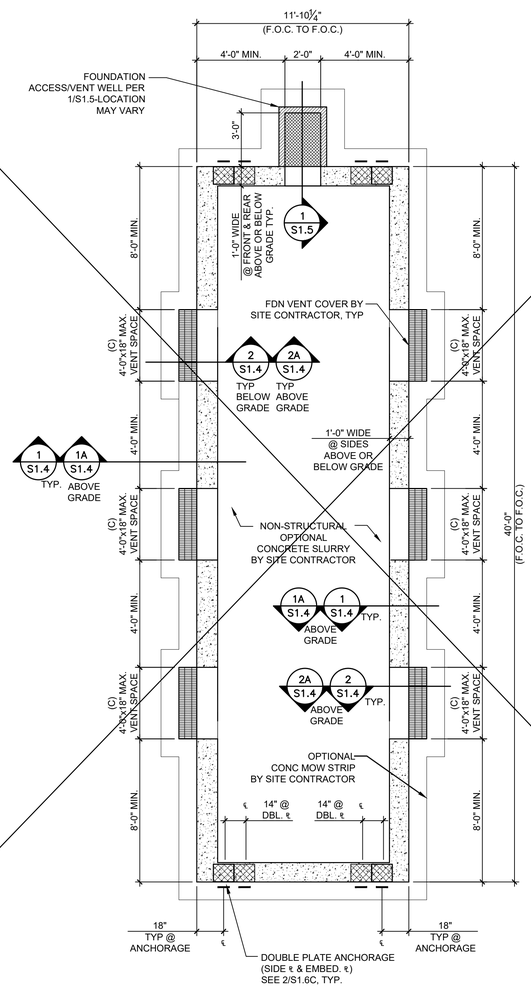

CONCRETE FOUNDATION PLAN (WOOD FLOOR)
100 PSF MAX FLOOR LIVE LOAD

☐

SCALE:1/4"=1'-0" A

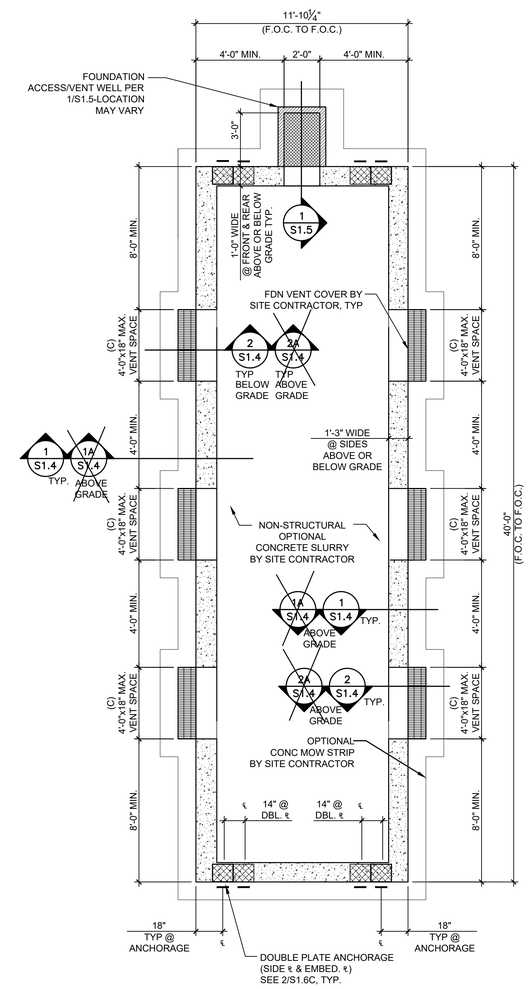

SERIAL NUMBER
(1) 26-315-005 A

CONCRETE FOUNDATION PLAN (CONCRETE FLOOR)
100 PSF MAX FLOOR LIVE LOAD

☒

SCALE:1/4"=1'-0" B

1. CONCRETE MIXTURES:
   A. ULTIMATE 28-DAY CONCRETE COMPRESSIVE STRENGTH (f'c) SHALL BE PER SHEET N1.0A
   B. PROPORTIONING OF CONCRETE MIXTURES SHALL BE IN ACCORDANCE WITH ACI 318-19, SECTION 26.4.3.
   C. DOCUMENTATION OF CONCRETE MIXTURE CHARACTERISTICS SHALL BE IN ACCORDANCE WITH ACI 318-19, SECTION 26.4.4.
   D. CEMENT SHALL BE CERTIFIED PER TITLE 24, PART 2, SECTION 1910A.1.
   E. SEE SHEET N1.0 FOR ADDITIONAL CONCRETE NOTES.

2. BUILDINGS MAY BE SET ON CONCRETE FOUNDATIONS THAT HAVE REACHED A MINIMUM CONCRETE COMPRESSIVE STRENGTH OF 2,500 PSI. PRIOR TO THE SETTING OF THE MODULAR BUILDING ON CONCRETE FOUNDATIONS THAT HAVE NOT YET CURED 28 DAYS POST PLACEMENT OF FOUNDATION CONCRETE, THE FOUNDATION CONTRACTOR SHALL
   A. HAVE THE PROJECT TESTING LAB PERFORM CONCRETE CYLINDER COMPRESSION TESTS OF THE FOUNDATION CONCRETE USED AT THE SITE,
   B. FURNISH THE PROJECT IOR AND THE REGISTERED DESIGN PROFESSIONAL IN RESPONSIBLE CHARGE WITH THE CONCRETE TEST REPORTS VERIFYING THAT THE FOUNDATION CONCRETE HAS REACHED THE MINIMUM STRENGTH AS SPECIFIED ABOVE, AND
   C. NOTIFY THE PROJECT IOR AND THE REGISTERED DESIGN PROFESSIONAL IN RESPONSIBLE CHARGE OF THEIR INTENT TO SET THE MODULAR BUILDING PRIOR TO 28 DAYS POST PLACEMENT OF FOUNDATION CONCRETE.

3. REINFORCING STEEL SHALL BE 60,000 PSI MINIMUM, PER ASTM A615. THE REINFORCING BARS SHALL BE TESTED PER TITLE 24, PART 2, SECTION 1910A.2. TEST OF REINFORCING BARS MAY BE WAIVED PROVIDED CERTIFIED MILL TEST REPORTS ARE PROVIDED FOR EACH SHIPMENT OF SUCH REINFORCEMENT.

4. DESIGN SOIL BEARING CAPACITY: 1500 PSF.
   (1/3 INCREASE IN SOIL BEARING CAPACITY NOT PERMITTED FOR WIND & SEISMIC LOAD COMBINATIONS UNLESS USING ALTERNATIVE BASIC LOAD COMBINATIONS PER CBC SECTION 1605A.3.2)

5. THE REGISTERED DESIGN PROFESSIONAL IN RESPONSIBLE CHARGE SHALL VERIFY THE NET AREA OF THE UNDER-FLOOR VENTING IS EQUAL TO OR LARGER THAN THE VENT AREA REQUIRED (AS SHOWN ON THE ADJACENT TABLE).

NOTES

NOMINAL BLDG SIZE (FT)	TOTAL # OF 12' WIDE MODULES	"A" TOTAL # OF CENTER MODULES	"B" TOTAL FNDN WIDTH[1]	TOTAL NOMINAL FLOOR AREA (FT^2)	NET FREE VENT AREA $REQ'D^3$ (FT^2)	IF 4'x12" VENTS ARE USED SOLELY		IF 4'x18" VENTS ARE USED SOLELY	
						"C" MIN. TOTAL VENTS $REQ'D^3$	NET FREE VENT AREA $PROVIDED^3$ (FT^2)	"C" MIN. TOTAL VENTS $REQ'D^3$	NET FREE VENT AREA $PROVIDED^3$ (FT^2)
☒ 12'x40'	1	0	11'-10¼"	480	3.2	2	5.8	2	8.8

NOTES:

TOTAL FOUNDATION WIDTH INCLUDES ¼" PER MODULE CONSTRUCTION TOLERANCE.

1. UNLESS NOTED OTHERWISE, DIMENSIONS ARE FROM FACE OF CONCRETE TO FACE OF CONCRETE (FOC TO FOC)

2. THE NUMBER OF VENTS REQUIRED IS BASED ON THE VENT NET FREE AREA (NFA) PROVIDED BEING GREATER OR EQUAL TO THE VENT NFA REQUIRED. VENT NFA REQUIRED IS BASED ON A 1:150 VENTILATION RATIO OF THE NOMINAL BUILDING FLOOR AREA. VENT NFA PROVIDED IS THE ACTUAL OPEN AREA WITH A VENT GROSS AREA REDUCTION PERCENTAGE OF 73% & NUMBER OF VENTS PROVIDED.

$NFA_{REQUIRED} = A_{FLOOR} / 150$ $NFA_{PROVIDED} > NFA_{REQUIRED}$ $A_{VENT,GROSS} \times 73\% \times (\#\ OF\ VENTS) > NFA_{REQUIRED}$

4. REQUIRED VENTING MAY BE ACHIEVED BY A COMBINATION OF ACCESS VENT(S) AND VENTS OF DIFFERENT SIZES BASED ON THE VALUES LISTED BELOW.

4'x12" VENTS x 0.73 x (# OF VENTS) = 2.92 FT^2 x (# OF VENTS)

4'x18" VENTS x 0.73 x (# OF VENTS) = 4.38 FT^2 x (# OF VENTS)

ACCESS VENTS - 2' x1.5' x (# OF VENTS) = 3.00 FT^2 x (# OF VENTS)

VENTING

IDENTIFICATION STAMP
DIV. OF THE STATE ARCHITECT
APP: 04-125522 INC:
REVIEWED FOR
SS ☑ FLS ☑ ACS ☑
DATE: 08/19/2026

American Modular Systems
787 Spreckels Ave., Manteca, CA 95336
Phone (209) 825-1921 Fax (209) 825-7018
www.americanmodular.com

INTELLECTUAL-PROPERTY & PROPRIETARY RIGHTS STATEMENT
COPYRIGHT © AMERICAN MODULAR SYSTEMS (AMS)
AMS OWNS ALL COPYRIGHT AND OTHER INTELLECTUAL-PROPERTY AND PROPRIETARY RIGHTS IN THESE DRAWINGS, SPECIFICATIONS, AND THE MATERIAL CONTAINED HEREIN. CERTAIN ELEMENTS SHOWN IN THESE DOCUMENTS ARE REGISTERED TRADEMARKS OF AMS. ALL PATENTABLE MATERIALS CONTAINED IN THESE DOCUMENTS AND ORIGINATING WITH AMS WILL REMAIN THE SOLE PROPERTY OF AMS. THESE DRAWING, SPECIFICATIONS, AND THE MATERIAL CONTAINED HEREIN MAY NOT BE REPRODUCED, TRANSMITTED, COPIED, DISTRIBUTED, MODIFIED, OR OTHERWISE DISPOSED OF (DIRECTLY OR INDIRECTLY) AND MAY NOT BE USED (IN WHOLE OR IN PART) TO ASSIST IN THE CONSTRUCTION, DESIGN, OR OTHER MAKING OF, OR FOR THE PURPOSE OF FURNISHING ANY INFORMATION FOR THE CONSTRUCTION, DESIGN, OR OTHER MAKING OF, ANY BUILDINGS (MODULAR OR OTHERWISE), DRAWINGS, SPECIFICATIONS, PRINTS, APPARATUS, OR PARTS THEREOF, EXCEPT AS EXPRESSLY PERMITTED BY WRITTEN CONSENT OF, OR IN A WRITTEN AGREEMENT WITH, AMS. SUBMITTAL OR DISTRIBUTION TO MEET OFFICIAL REGULATORY REQUIREMENTS WILL NOT BE CONSTRUED AS PUBLICATION IN DEROGATION OF AMS'S COPYRIGHT OR OTHER INTELLECTUAL-PROPERTY OR PROPRIETARY RIGHTS.

PRE-CHECKED SET NAME
12' x 40' STANDARD MODULAR BUILDING

FORM®

SITE SPECIFIC PROJECT NAME

APPROVED
DIV. OF THE STATE ARCHITECT
APP: 04-122042 PC
REVIEWED FOR
SS ☑ FLS ☑ ACS ☑ CG ☑
DATE: 02/15/2024

☐ 2022 CBC PRE-CHECK (PC) DOCUMENT
A SEPARATE PROJECT APPLICATION FOR CONSTRUCTION IS REQUIRED

MANUFACTURER PROFESSIONAL OF RECORD ON PC

LICENSED ARCHITECT
MARK PATRICK CONNELLY
No. C12631
Ren. 3-31-25
STATE OF CALIFORNIA

REGISTERED PROFESSIONAL ENGINEER
MANNY D. FLORES
No. S3380
STRUCTURAL
STATE OF CALIFORNIA
RST#22214

02-08-24
THESE DRAWINGS ARE PRELIMINARY AND NOT FOR CONSTRUCTION UNLESS STAMPED & SIGNED BY THE DESIGN PROFESSIONAL OF RECORD.

REVISIONS
1
2
3
4

DRAWN BY:	
SCALE:	AS NOTED
DATE:	MM/DD/YY
PROJECT NO:	XXXX-XX

SHEET TITLE:
CONCRETE FOUNDATION PLANS
CONCRETE FLOORS
(100 PSF MAX FLOOR LIVE LOAD)

SHEET NUMBER:
S1.0

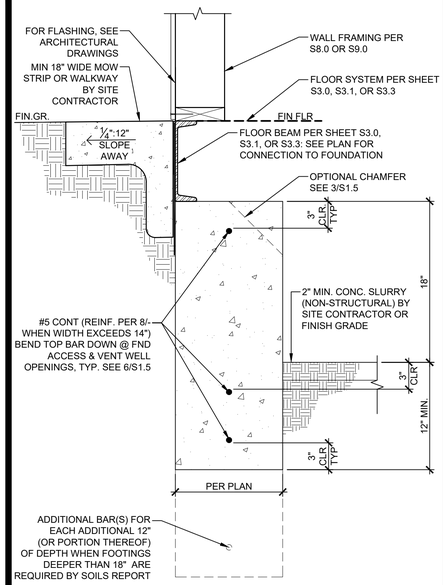

TYP. FOOTING - BELOW GRADE SCALE: 1-1/2" = 1'-0" 1

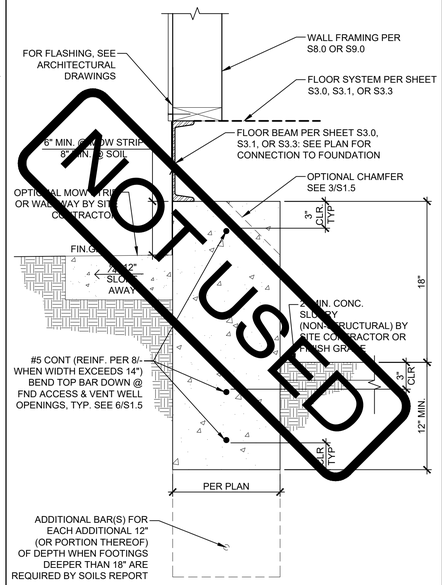

TYP. FOOTING - ABOVE GRADE SCALE: 1-1/2" = 1'-0" 1A

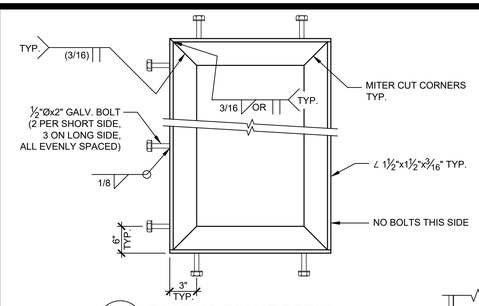

A A GRATING FRAME DETAIL
3"=1'-0"

NOTE:
GRATING LOCATED IN PEDESTRIAN WAYS SHALL COMPLY WITH 11B-302.3. OPENINGS SHALL BE MAX 1/2" AND ELONGATED OPENINGS SHALL BE PLACED SO THAT THE LONG DIMENSION IS PERPENDICULAR TO THE DOMINANT DIRECTION OF TRAVEL.

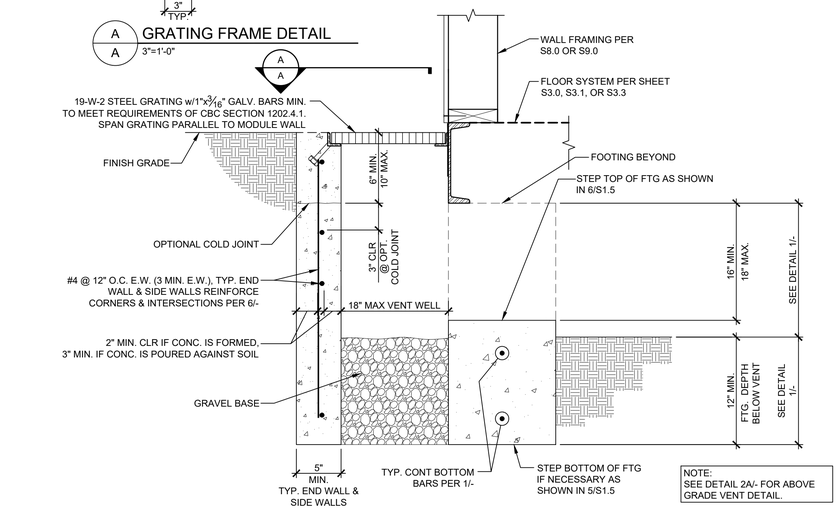

NOTE:
SEE DETAIL 2A/- FOR ABOVE GRADE VENT DETAIL.

TYP. VENT DETAIL - BELOW GRADE SCALE: 1-1/2" = 1'-0" 2

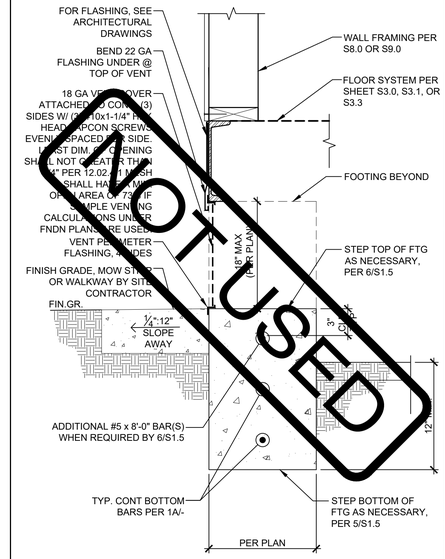

NOTE:
SEE DETAIL 2/- FOR INFO NOT SHOWN

TYP. VENT DETAIL - ABOVE GRADE SCALE: 1-1/2" = 1'-0" 2A

NOT USED 3

NOT USED 3A

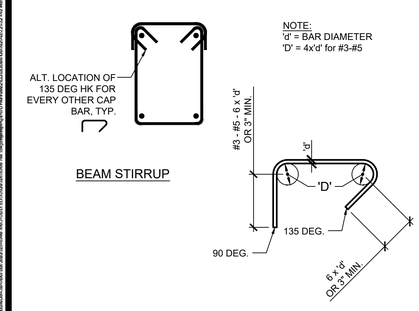

TYP. TIE & STIRRUP HOOKS

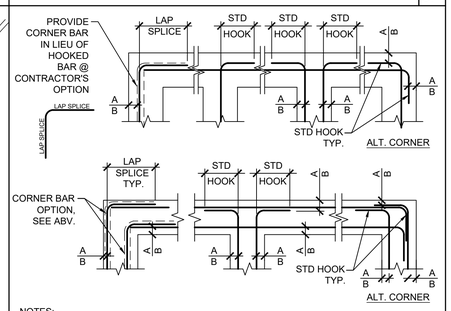

NOTES:
1. LAP SPLICE SHALL BE TYPICAL CLASS B SPLICE PER DETAIL 9/-.
2. HOOK LENGTH SHALL BE MIN 12d OR 12", WHICHEVER IS GREATER, WHERE d = DIAMETER OF THE BAR.
3. "A" = 2" COVER @ FORMED FOOTING
4. "B" = 3" COVER @ UNFORMED FOOTING

REINFORCING SCHEDULE		
FOOTING WIDTH (IN.)	CONTINUOUS LONGITUDINAL REINFORCING (EACH HORIZ. LEVEL)	TRANSVERSE REINFORCING (EACH HORIZ. LEVEL)
12"	(1) #5	NOT REQ'D
12"< W ≤ 16"	(1) #6	NOT REQ'D
	(2) #5	#4 @ 24" O.C.
16"< W ≤ 24"	(2) #5	#4 @ 24" O.C.
24"< W ≤ 36"	(3) #5	#4 @ 24" O.C.
36"< W ≤ 48"	(4) #5	#4 @ 24" O.C.

TYPICAL HOOP-STIRRUP DETAIL SCALE: 1-1/2" = 1'-0" 5

TYPICAL FOOTING REINFORCING SCALE: 1-1/2" = 1'-0" 6

REINFORCEMENT WHEN FOOTING EXCEEDS 12" 8

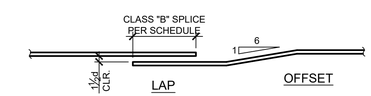

ALTERNATE: PLACE BARS IN CONTACT & WIRE TOGETHER

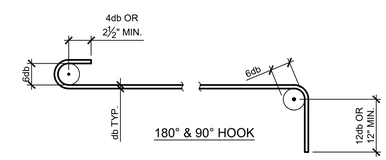

BAR SIZE #	DEVELOPMENT LENGTH[3]			TYPICAL CLASS B LAP SPLICE LENGTH[4]					
	3000 PSI (IN)	3500 PSI (IN)	4000+ PSI (IN)	3000 PSI		3500 PSI		4000+ PSI	
				TOP[2] (IN)	BOTTOM (IN)	TOP[2] (IN)	BOTTOM (IN)	TOP[2] (IN)	BOTTOM (IN)
3	13	12	12	21	16	20	16	20	16
4	17	16	15	28	22	26	20	24	19
5	21	20	18	35	27	33	25	30	24
6	25	23	22	42	32	39	30	36	28

NOTES:
1. THE ABOVE TABLE IS BASED ON GRADE 60 STEEL
2. TOP BARS ARE ANY BARS WITH MORE THAN 12" OF CONCRETE PLACED BELOW.
3. DEVELOPMENT LENGTH IS CALCULATED FOR TYP. BARS - Ψ_t=1.0
4. LAP SPLICES IN ADJACENT BARS SHALL BE STAGGERED, UNLESS OTHERWISE NOTED.

TYP. REINFORCING LAPS & BENDS SCALE: 1-1/2" = 1'-0" 9

IDENTIFICATION STAMP
DIV. OF THE STATE ARCHITECT
APP: 04-125522 INC:
REVIEWED FOR
SS ☑ FLS ☑ ACS ☑
DATE: 08/19/2026

AMS®
American Modular Systems
787 Spreckels Ave., Manteca, CA 95336
Phone (209) 825-1921 Fax (209) 825-7018
www.americanmodular.com

INTELLECTUAL-PROPERTY & PROPRIETARY RIGHTS STATEMENT
COPYRIGHT © AMERICAN MODULAR SYSTEMS (AMS)
AMS OWNS ALL COPYRIGHT AND OTHER INTELLECTUAL-PROPERTY AND PROPRIETARY RIGHTS IN THESE DRAWINGS, SPECIFICATIONS, AND THE MATERIAL CONTAINED HEREIN. CERTAIN ELEMENTS SHOWN IN THESE DOCUMENTS ARE REGISTERED TRADEMARKS OF AMS. ALL PATENTABLE MATERIALS CONTAINED IN THESE DOCUMENTS AND ORIGINATING WITH AMS WILL REMAIN THE SOLE PROPERTY OF AMS. THESE DRAWING, SPECIFICATIONS, AND THE MATERIAL CONTAINED HEREIN MAY NOT BE REPRODUCED, TRANSMITTED, COPIED, DISTRIBUTED, MODIFIED, OR OTHERWISE DISPOSED OF (DIRECTLY OR INDIRECTLY) AND MAY NOT BE USED (IN WHOLE OR IN PART) TO ASSIST IN THE CONSTRUCTION, DESIGN, OR OTHER MAKING OF, OR FOR THE PURPOSE OF FURNISHING ANY INFORMATION FOR THE CONSTRUCTION, DESIGN, OR OTHER MAKING OF, ANY BUILDINGS (MODULAR OR OTHERWISE), DRAWINGS, SPECIFICATIONS, PRINTS, APPARATUS, OR PARTS THEREOF, EXCEPT AS EXPRESSLY PERMITTED BY WRITTEN CONSENT OF, OR IN A WRITTEN AGREEMENT WITH, AMS. SUBMITTAL OR DISTRIBUTION TO MEET OFFICIAL REGULATORY REQUIREMENTS WILL NOT BE CONSTRUED AS PUBLICATION IN DEROGATION OF AMS'S COPYRIGHT OR OTHER INTELLECTUAL-PROPERTY OR PROPRIETARY RIGHTS.

PRE-CHECKED SET NAME
12' x 40' STANDARD MODULAR BUILDING
FORM®

SITE SPECIFIC PROJECT NAME
.
.
.

APPROVED
DIV. OF THE STATE ARCHITECT
APP: 04-122042 PC
REVIEWED FOR
SS ☑ FLS ☑ ACS ☑ CG ☑
DATE: 02/15/2024

☐ 2022 CBC PRE-CHECK (PC) DOCUMENT
A SEPARATE PROJECT APPLICATION FOR CONSTRUCTION IS REQUIRED.

MANUFACTURER PROFESSIONAL OF RECORD ON PC

LICENSED ARCHITECT
PATRICK MAHONEY
No. C12631
Ren. 3-31-25
STATE OF CALIFORNIA

REGISTERED PROFESSIONAL ENGINEER
No. S3380
STRUCTURAL
STATE OF CALIFORNIA
RST#22214

02-08-24
THESE DRAWINGS ARE PRELIMINARY AND NOT FOR CONSTRUCTION UNLESS STAMPED & SIGNED BY THE DESIGN PROFESSIONAL OF RECORD.

REVISIONS
1
2
3
4

DRAWN BY:	
SCALE:	AS NOTED
DATE:	MM/DD/YY
PROJECT NO:	XXXX-XX

SHEET TITLE:
CONCRETE FOUNDATION DETAILS

SHEET NUMBER:
S1.4

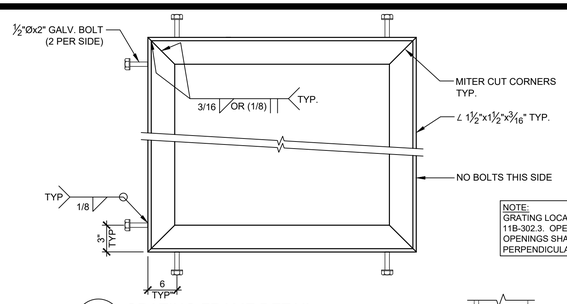

NOTE:
GRATING LOCATED IN PEDESTRIAN WAYS SHALL COMPLY WITH 11B-302.3. OPENINGS SHALL BE MAX 1/2" AND ELONGATED OPENINGS SHALL BE PLACED SO THAT THE LONG DIMENSION IS PERPENDICULAR TO THE DOMINANT DIRECTION OF TRAVEL.

A / A GRATING FRAME DETAIL
N.T.S.

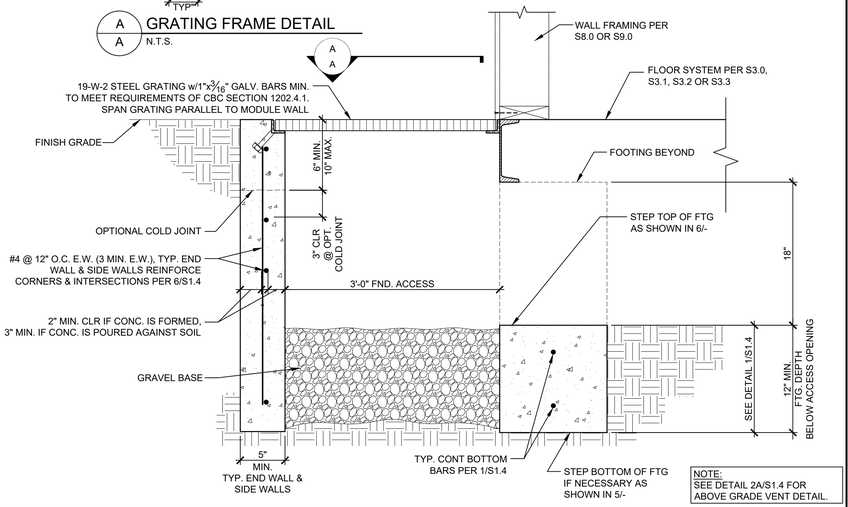

NOTE:
SEE DETAIL 2A/S1.4 FOR ABOVE GRADE VENT DETAIL.

BELOW GRADE SECTION / ACCESS WELL DETAIL

SCALE:1 1/2"=1'-0" | 1

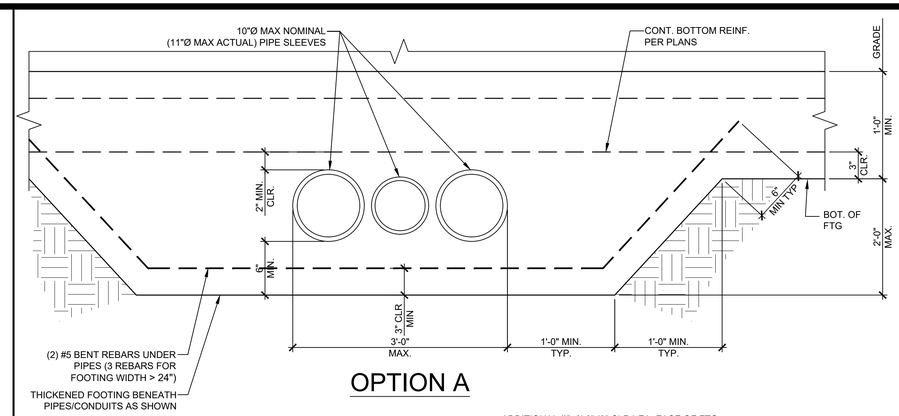

OPTION A

NOTES:
1. AS AN OPTION TO INDIVIDUAL PIPE SLEEVES, THE FOOTING MAY BE BLOCKED OUT FOR MULTIPLE PIPES (10" HIGH x 36" WIDE MAX @ OPTION "A", 10" HIGH x 24" WIDE MAX OPTION "B") OR INDIVIDUALLY. PROVIDE 1" MIN. CLEARANCE ALL AROUND BETWEEN PIPES/CONDUITS & BLOCKOUT/SLEEVES & FILL w/ CAULK.
2. CONCRETE SHALL BE WELL CONSOLIDATED AROUND & UNDER PIPES, CONDUITS, SLEEVES, BLOCKOUTS TO PREVENT CONCRETE VOCIDS.
3. PROVIDE 2" CLEAR MIN BETWEEN BLOCKOUT SLEEVES AND REINFORCEMENT.
4. WHERE TOP OF PIPES/CONDUITS ARE 12" OR MORE BELOW THE BOTTOM OF THE FOOTING, THICKENED FOOTING AROUND PIPES/CONDUITS IS NOT REQUIRED. BACKFILL & COMPACT TO 95% OVER PIPES / CONDUITS PRIOR TO PLACING FOOTING.

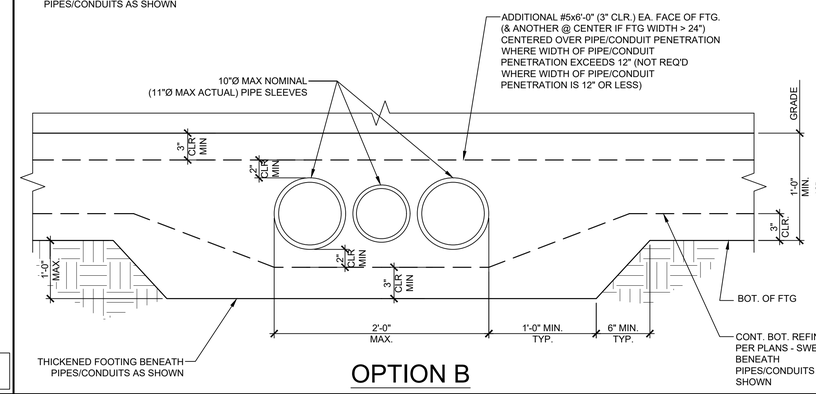

OPTION B

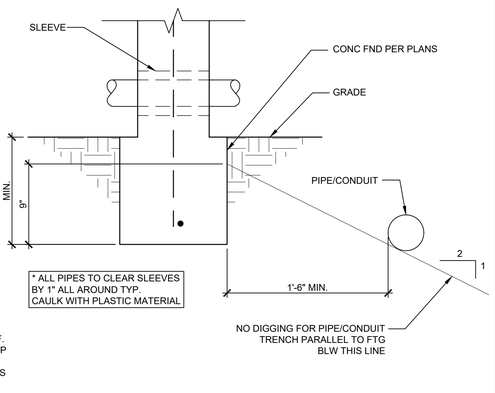

* ALL PIPES TO CLEAR SLEEVES BY 1" ALL AROUND TYP. CAULK WITH PLASTIC MATERIAL

PIPE SLEEVE DETAIL

N.T.S. | 2

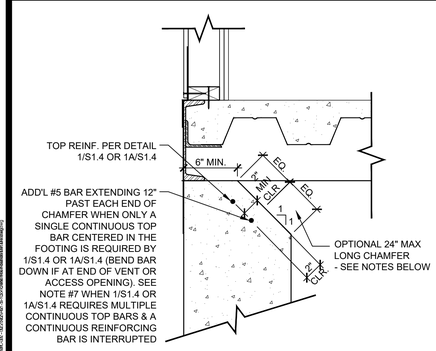

NOTES:

1. CHAMFER MAY BE LOCATED ALONG ALL LOCATIONS OF THE PERIMETER OF THE BUILDING FOUNDATION UNLESS OTHERWISE NOTED ON PLAN OR AS DESCRIBED BELOW.
2. CHAMFER SHALL NOT BE LOCATED WITHIN 3'-6" OF THE CORNERS OF THE BUILDING FOUNDATION.
3. CHAMFERS AT FRONT OR REAR END WALL FOOTINGS SHALL NOT BE LOCATED WITHIN 2'-0" OF A MODULE LINE
4. CHAMFERS SHALL NOT BE LOCATED WITHIN 1'-6" OF UTILITY OPENINGS PER SHEET S1.7
5. CHAMFER MAY OCCUR AT THE ENDS OF VENT OR ACCESS OPENINGS (ALONG THE INTERIOR EDGE OF THE STEMWALL PARALLEL TO THE FLOOR BEAM AS SHOWN ABOVE)
6. BOTTOM OF CHAMFER SHALL NOT BE LOWER THAN FINISHED GRADE
7. WHEN 1/S1.4 OR 1A/S1.4 REQUIRES MULTIPLE CONTINUOUS TOP BARS AND THE CHAMFER INTERRUPTS A CONTINUOUS LONGITUDINAL REINFORCING BAR, PROVIDE AN ADDITIONAL #5 x 6'-0" BAR 2" CLEAR AND CENTERED ON THE CHAMFER (BEND BAR DOWN IF AT END OF VENT OR ACCESS OPENING)
8. FOR ALL ITEMS NOT SHOWN OR NOTED SEE DETAILS 1/S1.4 & 1A/S1.4.

CHAMFER DETAILS @ PERIMETER

SCALE:1 1/2"=1'-0" | 3

NOT USED | 4

TYPICAL STEPPED FOOTING DETAILS

SCALE: 3/8"=1'-0" | 5

NOTE: SEE SECTIONS FOR FTG WIDTH & REINF

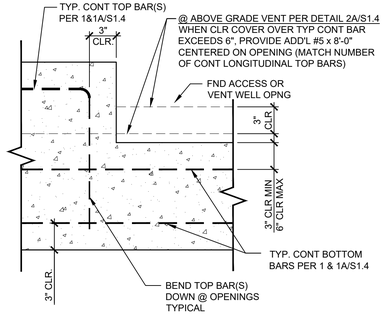

VENT/ACCESS OPENING DETAIL

SCALE:1 1/2"=1'-0" | 6

NOT USED | 7

IDENTIFICATION STAMP
DIV. OF THE STATE ARCHITECT
APP: 04-125522 INC:
REVIEWED FOR
SS ☑ FLS ☑ ACS ☑
DATE: 08/19/2026

American Modular Systems
787 Spreckels Ave., Manteca, CA 95336
Phone (209) 825-1921 Fax (209) 825-7018
www.americanmodular.com

INTELLECTUAL-PROPERTY & PROPRIETARY RIGHTS STATEMENT
COPYRIGHT © AMERICAN MODULAR SYSTEMS (AMS)
AMS OWNS ALL COPYRIGHT AND OTHER INTELLECTUAL-PROPERTY AND PROPRIETARY RIGHTS IN THESE DRAWINGS, SPECIFICATIONS, AND THE MATERIAL CONTAINED HEREIN. CERTAIN ELEMENTS SHOWN IN THESE DOCUMENTS ARE REGISTERED TRADEMARKS OF AMS. ALL PATENTABLE MATERIALS CONTAINED IN THESE DOCUMENTS AND ORIGINATING WITH AMS WILL REMAIN THE SOLE PROPERTY OF AMS. THESE DRAWING, SPECIFICATIONS, AND THE MATERIAL CONTAINED HEREIN MAY NOT BE REPRODUCED, TRANSMITTED, COPIED, DISTRIBUTED, MODIFIED, OR OTHERWISE DISPOSED OF (DIRECTLY OR INDIRECTLY) AND MAY NOT BE USED (IN WHOLE OR IN PART) TO ASSIST IN THE CONSTRUCTION, DESIGN, OR OTHER MAKING OF, OR FOR THE PURPOSE OF FURNISHING ANY INFORMATION FOR THE CONSTRUCTION, DESIGN, OR OTHER MAKING OF, ANY BUILDINGS (MODULAR OR OTHERWISE), DRAWINGS, SPECIFICATIONS, PRINTS, APPARATUS, OR PARTS THEREOF, EXCEPT AS EXPRESSLY PERMITTED BY WRITTEN CONSENT OF, OR IN A WRITTEN AGREEMENT WITH, AMS. SUBMITTAL OR DISTRIBUTION TO MEET OFFICIAL REGULATORY REQUIREMENTS WILL NOT BE CONSTRUED AS PUBLICATION IN DEROGATION OF AMS'S COPYRIGHT OR OTHER INTELLECTUAL-PROPERTY OR PROPRIETARY RIGHTS.

PRE-CHECKED SET NAME
12' x 40' STANDARD MODULAR BUILDING

FORM®

SITE SPECIFIC PROJECT NAME

APPROVED
DIV. OF THE STATE ARCHITECT
APP: 04-122042 PC
REVIEWED FOR
SS ☑ FLS ☑ ACS ☑ CG ☑
DATE: 02/15/2024

☐ 2022 CBC PRE-CHECK (PC) DOCUMENT
A SEPARATE PROJECT APPLICATION FOR CONSTRUCTION IS REQUIRED

MANUFACTURER PROFESSIONAL OF RECORD ON PC

LICENSED ARCHITECT
ANDRAY PATRICK CLEMENS
No. C12631
Ren. 3-31-25
STATE OF CALIFORNIA

REGISTERED PROFESSIONAL ENGINEER
MANJU D. PARIKH
No. S3380
STRUCTURAL
STATE OF CALIFORNIA
RST#22114

02-08-24

THESE DRAWINGS ARE PRELIMINARY AND NOT FOR CONSTRUCTION UNLESS STAMPED & SIGNED BY THE DESIGN PROFESSIONAL OF RECORD.

REVISIONS
1
2
3
4

DRAWN BY:	
SCALE:	AS NOTED
DATE:	MM/DD/YY
PROJECT NO:	XXXX-XX

SHEET TITLE:
CONCRETE FOUNDATION DETAILS

SHEET NUMBER:
S1.5

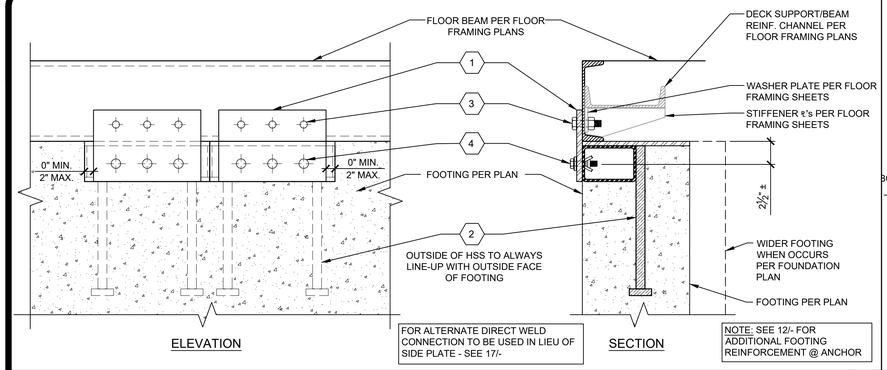

FOR ALTERNATE DIRECT WELD CONNECTION TO BE USED IN LIEU OF SIDE PLATE - SEE 17/-

NOTE: SEE 12/- FOR ADDITIONAL FOOTING REINFORCEMENT @ ANCHOR

STANDARD ANCHORAGE DETAIL 2

SCALE: 1-1/2" = 1'-0"

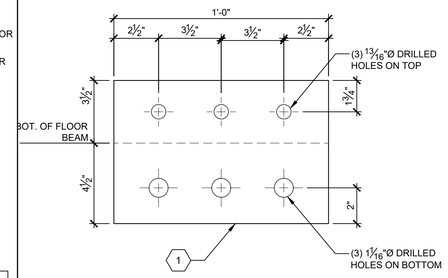

SIDE PLATE DETAIL 3

SCALE: 3" = 1'-0"

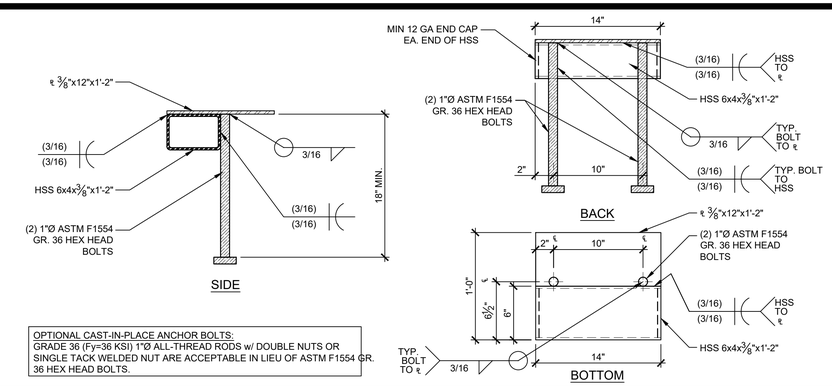

OPTIONAL CAST-IN-PLACE ANCHOR BOLTS:
GRADE 36 (Fy=36 KSI) 1"Ø ALL-THREAD RODS w/ DOUBLE NUTS OR SINGLE TACK WELDED NUT ARE ACCEPTABLE IN LIEU OF ASTM F1554 GR. 36 HEX HEAD BOLTS.

EMBEDDED ANCHOR DETAIL 5

SCALE: 1-1/2" = 1'-0"

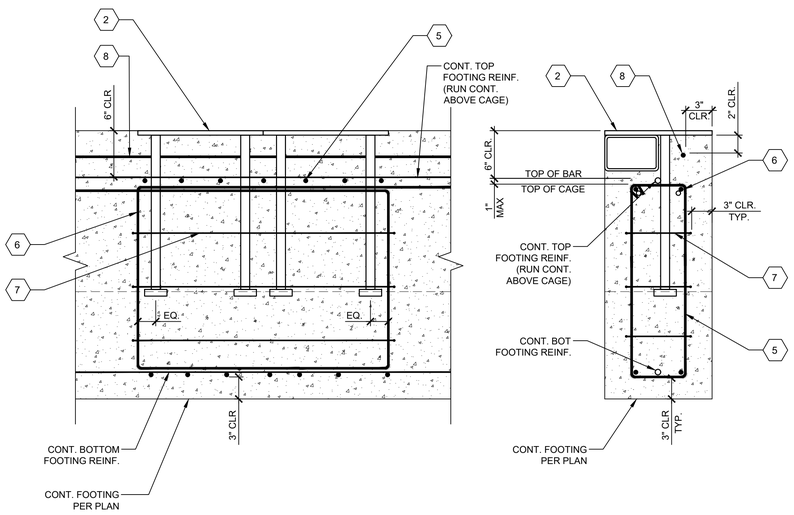

EMBEDDED ANCHOR REINFORCEMENT DETAIL 12

SCALE: 1-1/2" = 1'-0"

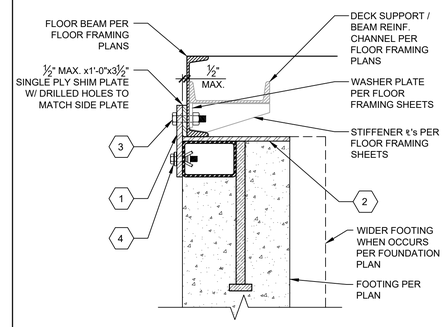

OPT. SHIM @ TOP 8

SCALE: 1-1/2" = 1'-0"

NOT USED 9

1. (2) ½"x8"x1'-0" (36 KSI) OR (2) ⅜"x8"x1'-0" (50 KSI) SIDE PLATES. LOCATION PER PLAN - SEE 3/-
2. (2) EMBEDDED ANCHORS. LOCATION PER PLAN - SEE 5/-
3. (3) ¾"Ø M.B. THRU-BOLTED THROUGH SIDE ℄ & FLOOR BEAM w/ 13/16"Ø HOLES - SEE 8/- FOR OPTIONAL SHIM DETAIL.
4. (3) ⅝"Ø LHBM16 "HOLLO-BOLT" EXPANSION BOLTS PER ICC ESR-3330 THROUGH SIDE ℄ INTO THE HSS OF THE EMBEDDED ANCHOR w/ 1 1/16"Ø HOLES
   - SEE GENERAL NOTES FOR SPECS. & INSTALLATION REQUIREMENTS,
   - SEE 13/- FOR OPTIONAL SHIM DETAIL.
5. (7) #3 VERTICAL HOOPS PER 12/-, FORMED PER 5/S1.4 & SPACED AS SHOWN @ ANCHORS.
6. (2) #4 BENT BARS CENTERED ON ANCHORS - (1) EA. SIDE OF ANCHORS.

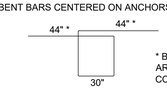

* BEND DOWN @ VENTS OR AROUND PERIMETER @ CORNER.

7. #3 HORIZONTAL HOOPS PER 12/-, FORMED PER 5/S1.4 & SPACED @ 6" O.C.
8. ADDITIONAL #5x8'-0" CENTERED @ ANCHOR. BEND DOWN @ VENTS OR AROUND PERIMETER @ CORNERS.

KEY NOTES

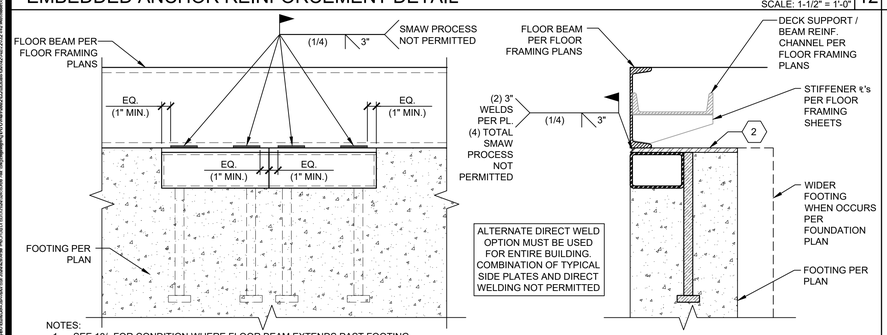

ALTERNATE DIRECT WELD OPTION MUST BE USED FOR ENTIRE BUILDING. COMBINATION OF TYPICAL SIDE PLATES AND DIRECT WELDING NOT PERMITTED

NOTES:
1. SEE 18/- FOR CONDITION WHERE FLOOR BEAM EXTENDS PAST FOOTING.
2. SEE 19/- FOR CONDITION WHERE FOOTING EXTENDS PAST FLOOR BEAM.
3. WHEN ALTERNATE DIRECT WELD OPTION IS USED, IT MUST BE USED FOR THE ENTIRE BUILDING. COMBINATION OF TYPICAL SIDE PLATES & DIRECT WELDING IS NOT PERMITTED.

ALTERNATE DIRECT WELD CONNECTION 17

SCALE: 1-1/2" = 1'-0"

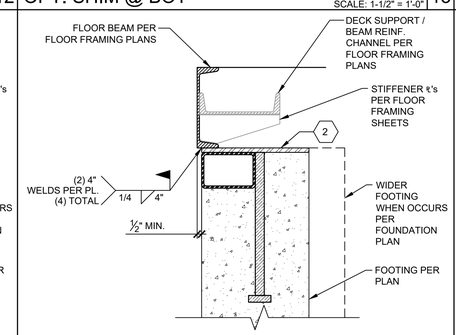

ALTERNATE DIRECT WELD @ OFFSET 18

SCALE: 1-1/2" = 1'-0"

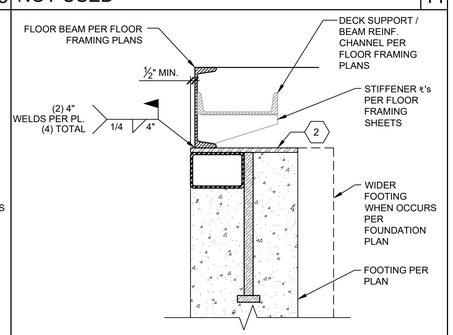

ALTERNATE DIRECT WELD @ OFFSET 19

SCALE: 1-1/2" = 1'-0"

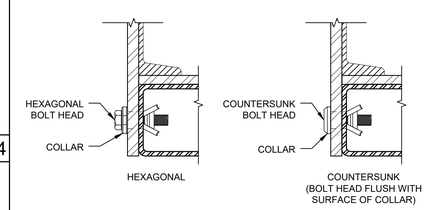

GENERAL NOTES

IDENTIFICATION STAMP
DIV. OF THE STATE ARCHITECT
APP: 04-125522 INC:
REVIEWED FOR
SS ☑ FLS ☑ ACS ☑
DATE: 08/19/2026

American Modular Systems
787 Spreckels Ave., Manteca, CA 95336
Phone (209) 825-1921 Fax (209) 825-7018
www.americanmodular.com

INTELLECTUAL-PROPERTY & PROPRIETARY RIGHTS STATEMENT
COPYRIGHT © AMERICAN MODULAR SYSTEMS (AMS)
AMS OWNS ALL COPYRIGHT AND OTHER INTELLECTUAL-PROPERTY AND PROPRIETARY RIGHTS IN THESE DRAWINGS, SPECIFICATIONS, AND THE MATERIAL CONTAINED HEREIN. CERTAIN ELEMENTS SHOWN IN THESE DOCUMENTS ARE REGISTERED TRADEMARKS OF AMS. ALL PATENTABLE MATERIALS CONTAINED IN THESE DOCUMENTS AND ORIGINATING WITH AMS WILL REMAIN THE SOLE PROPERTY OF AMS. THESE DRAWING, SPECIFICATIONS, AND THE MATERIAL CONTAINED HEREIN MAY NOT BE REPRODUCED, TRANSMITTED, COPIED, DISTRIBUTED, MODIFIED, OR OTHERWISE DISPOSED OF (DIRECTLY OR INDIRECTLY) AND MAY NOT BE USED (IN WHOLE OR IN PART) TO ASSIST IN THE CONSTRUCTION, DESIGN, OR OTHER MAKING OF, OR FOR THE PURPOSE OF FURNISHING ANY INFORMATION FOR THE CONSTRUCTION, DESIGN, OR OTHER MAKING OF, ANY BUILDINGS (MODULAR OR OTHERWISE), DRAWINGS, SPECIFICATIONS, PRINTS, APPARATUS, OR PARTS THEREOF, EXCEPT AS EXPRESSLY PERMITTED BY WRITTEN CONSENT OF, OR IN A WRITTEN AGREEMENT WITH, AMS. SUBMITTAL OR DISTRIBUTION TO MEET OFFICIAL REGULATORY REQUIREMENTS WILL NOT BE CONSTRUED AS PUBLICATION IN DEROGATION OF AMS'S COPYRIGHT OR OTHER INTELLECTUAL-PROPERTY OR PROPRIETARY RIGHTS.

PRE-CHECKED SET NAME
12' x 40' STANDARD MODULAR BUILDING

FORM®

SITE SPECIFIC PROJECT NAME

APPROVED
DIV. OF THE STATE ARCHITECT
APP: 04-122042 PC
REVIEWED FOR
SS ☑ FLS ☑ ACS ☑ CG ☑
DATE: 02/15/2024

☐ 2022 CBC PRE-CHECK (PC) DOCUMENT
A SEPARATE PROJECT APPLICATION FOR CONSTRUCTION IS REQUIRED.

MANUFACTURER PROFESSIONAL OF RECORD ON PC

LICENSED ARCHITECT
ANDREW PATRICK O'HARA
No. C12631
Ren. 3-31-25
STATE OF CALIFORNIA

REGISTERED PROFESSIONAL ENGINEER
MANDY D. PARCH
No. S3380
STRUCTURAL
STATE OF CALIFORNIA
RST#22114

02-08-24

THESE DRAWINGS ARE PRELIMINARY AND NOT FOR CONSTRUCTION UNLESS STAMPED & SIGNED BY THE DESIGN PROFESSIONAL OF RECORD.

REVISIONS
1
2
3
4

DRAWN BY:	
SCALE:	AS NOTED
DATE:	MM/DD/YY
PROJECT NO:	XXXX-XX

SHEET TITLE:
DOUBLE PLATE ANCHORAGE FOUNDATION DETAILS

SHEET NUMBER:
S1.6C

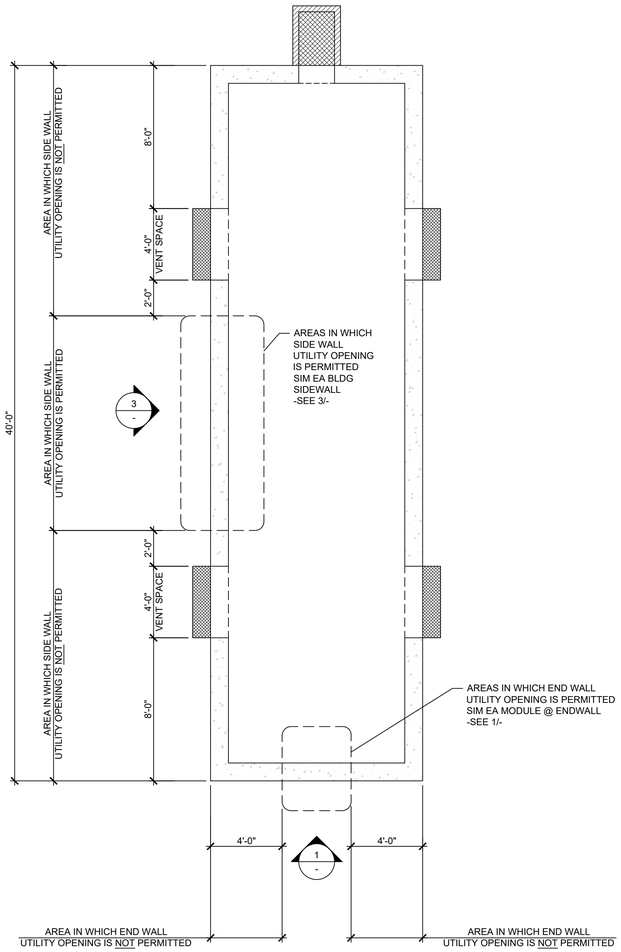

☐ OPTIONAL UTILITY OPENINGS PLAN SCALE: 1/4"=1'-0" A

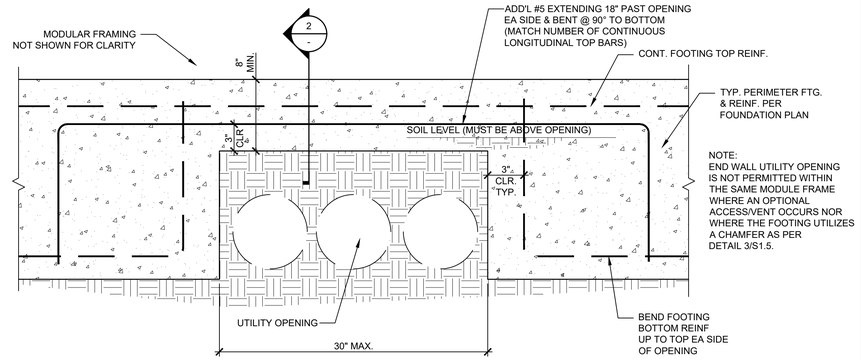

☐ OPTIONAL UTILITY OPENINGS IN END WALL FOOTINGS SCALE: 1 1/2"=1'-0" 1

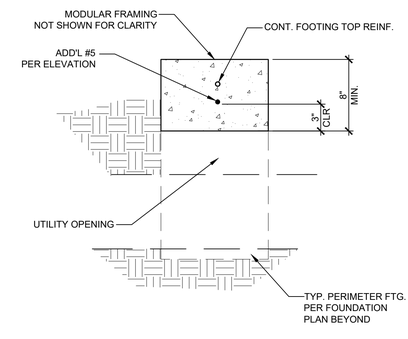

DETAIL SCALE: 1 1/2"=1'-0" 2

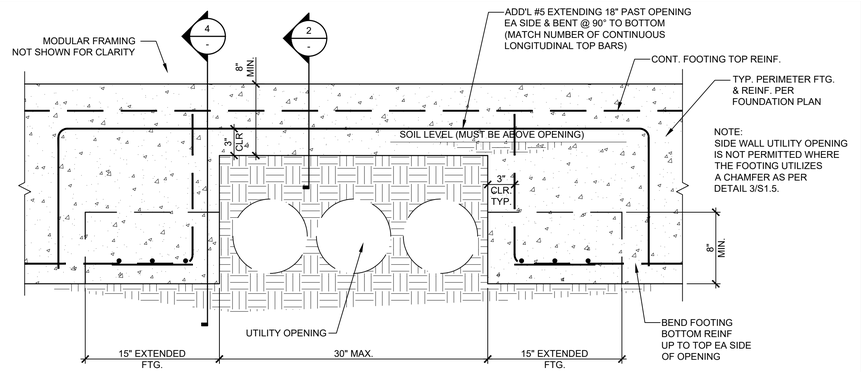

☐ OPTIONAL UTILITY OPENINGS IN SIDE WALL FOOTINGS SCALE: 1 1/2"=1'-0" 3

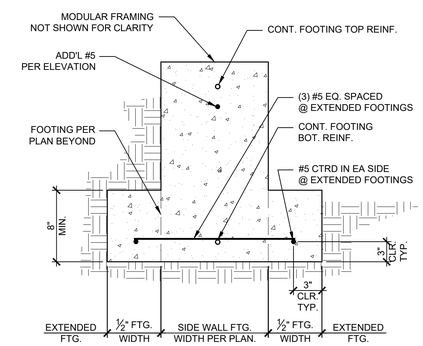

DETAIL SCALE: 1 1/2"=1'-0" 4

NOT USED	8	NOT USED	9	NOT USED	10	NOT USED	11	NOT USED	12

IDENTIFICATION STAMP
DIV. OF THE STATE ARCHITECT
APP: 04-125522 INC:
REVIEWED FOR
SS ☑ FLS ☑ ACS ☑
DATE: 08/19/2026

American Modular Systems
787 Spreckels Ave., Manteca, CA 95336
Phone (209) 825-1921 Fax (209) 825-7018
www.americanmodular.com

INTELLECTUAL-PROPERTY & PROPRIETARY RIGHTS STATEMENT
COPYRIGHT © AMERICAN MODULAR SYSTEMS (AMS)
AMS OWNS ALL COPYRIGHT AND OTHER INTELLECTUAL-PROPERTY AND PROPRIETARY RIGHTS IN THESE DRAWINGS, SPECIFICATIONS, AND THE MATERIAL CONTAINED HEREIN. CERTAIN ELEMENTS SHOWN IN THESE DOCUMENTS ARE REGISTERED TRADEMARKS OF AMS. ALL PATENTABLE MATERIALS CONTAINED IN THESE DOCUMENTS AND ORIGINATING WITH AMS WILL REMAIN THE SOLE PROPERTY OF AMS. THESE DRAWING, SPECIFICATIONS, AND THE MATERIAL CONTAINED HEREIN MAY NOT BE REPRODUCED, TRANSMITTED, COPIED, DISTRIBUTED, MODIFIED, OR OTHERWISE DISPOSED OF (DIRECTLY OR INDIRECTLY) AND MAY NOT BE USED (IN WHOLE OR IN PART) TO ASSIST IN THE CONSTRUCTION, DESIGN, OR OTHER MAKING OF, OR FOR THE PURPOSE OF FURNISHING ANY INFORMATION FOR THE CONSTRUCTION, DESIGN, OR OTHER MAKING OF, ANY BUILDINGS (MODULAR OR OTHERWISE), DRAWINGS, SPECIFICATIONS, PRINTS, APPARATUS, OR PARTS THEREOF, EXCEPT AS EXPRESSLY PERMITTED BY WRITTEN CONSENT OF, OR IN A WRITTEN AGREEMENT WITH, AMS. SUBMITTAL OR DISTRIBUTION TO MEET OFFICIAL REGULATORY REQUIREMENTS WILL NOT BE CONSTRUED AS PUBLICATION IN DEROGATION OF AMS'S COPYRIGHT OR OTHER INTELLECTUAL-PROPERTY OR PROPRIETARY RIGHTS.

PRE-CHECKED SET NAME
12' x 40' STANDARD MODULAR BUILDING
FORM®

SITE SPECIFIC PROJECT NAME

APPROVED
DIV. OF THE STATE ARCHITECT
APP: 04-122042 PC
REVIEWED FOR
SS ☑ FLS ☑ ACS ☑ CS ☑
DATE: 02/15/2024

☐ 2022 CBC PRE-CHECK (PC) DOCUMENT
A SEPARATE PROJECT APPLICATION FOR CONSTRUCTION IS REQUIRED.

MANUFACTURER PROFESSIONAL OF RECORD ON PC

LICENSED ARCHITECT
ANTHONY PATRICK CARNEY
No. C12631
Ren. 3-31-25
STATE OF CALIFORNIA

REGISTERED PROFESSIONAL ENGINEER
ANTHONY D. PARSCH
No. S3380
STRUCTURAL
STATE OF CALIFORNIA
RST#22214

02-08-24

THESE DRAWINGS ARE PRELIMINARY AND NOT FOR CONSTRUCTION UNLESS STAMPED & SIGNED BY THE DESIGN PROFESSIONAL OF RECORD.

REVISIONS
1
2
3
4

DRAWN BY:	
SCALE:	AS NOTED
DATE:	MM/DD/YY
PROJECT NO:	XXXX-XX

SHEET TITLE:
CONCRETE FOUNDATION OPTIONAL UTILITY OPENINGS IN FOOTINGS

SHEET NUMBER:
S1.7

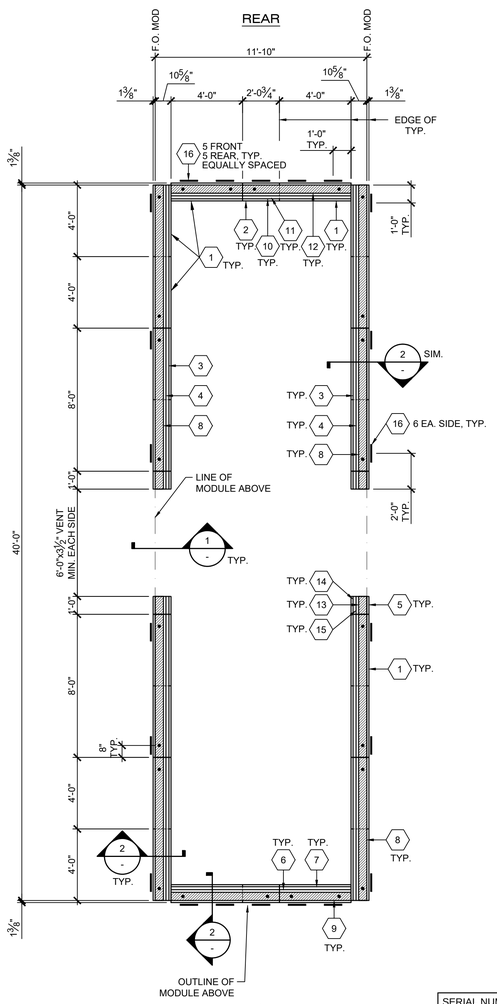

SERIAL NUMBER
(1) 26-315-004 A

ATTACHMENT SCHEDULE						
BUILDING SIZE	"D" GALV NAIL O.C. SPACING EA. ROW (IN) (40' WALLS) SEE 2/S2.0	"E" GALV NAIL O.C. SPACING EA. ROW (IN) (11'-10" WALLS) SEE S/S2.0	"H" EDGE NAIL (EN) SPACING (IN) (40'-0" WALLS) SEE 2/S2.0	"J" EDGE NAIL (EN) SPACING (IN) (11'-10" WALLS) SEE 2/S2.0	"K" # OF ALT SHEAR ℄'S (40' WALLS) EVENLY SPACED SEE 4/S2.0	"L" # OF ALT SHEAR ℄'S (11'-10" WALLS) EVENLY SPACED SEE 4/S2.0
12'x40'	8	3	6	3	5/SIDE	5/SIDE

WOOD FOUNDATION PLAN (PLYWOOD FLOOR) 100 PSF LIVE LOAD

SCALE: 1/4"=1'-0" A

☐ ON SOIL:
1"Ø STANDARD WEIGHT (1.315 ACTUAL O.D.) HOT DIPPED GALV. PIPE w/ 12" MIN. PENETRATION MEASURED VERTICALLY BELOW SOIL SURFACE @ 10'-0" O.C., MIN. 2 EA. 2x ℄. DRILL SILL 1⅜"Ø MAX. PIPE MAY BE DRIVEN MAX 45° ANGLE TO VERTICAL.

☐ ON A/C PAVING:
1"Ø STANDARD WEIGHT (1.315 ACTUAL O.C.) HOT DIPPED GALV. PIPE w/ 12" MIN. PENETRATION MEASURED VERTICALLY BELOW PAVING SURFACE @ 10'-0" O.C., MIN. 2 EA 2x ℄. DRILL SILL 1⅜"Ø MAX.

☐ ON CONC PAVING:
1"Ø STANDARD WEIGHT (1.315 ACTUAL O.D.) HOT DIPPED GALV. PIPE w/ 12" MIN. PENETRATION MEASURED VERTICALLY BELOW PAVING SURFACE @ 10'-0" O.C., MIN. 2 EA. 2x ℄. DRILL SILL 1⅜"Ø MAX.
ALT: Ø PER SCHEDULE SIMPSON SS (STAINLESS STEEL) STRONG-BOLT 2'S THRU SILL ℄ w/ MIN. CONC. EMBEDMENT PER SCHEDULE BELOW (PROVIDE A MINIMUM OF 2 BOLTS AT 2x PLATE LESS THAN 5'-0" AND 4 BOLTS AT 2x PLATE LARGER THAN 5'-0").
ANCHOR BOLTS SHALL BE CENTERED ON THE 2x PLATES AND LOCATED NO CLOSER THAN 4" FROM THE END OF THE PLATES.

SIMPSON SS STRONG-BOLT 2 O.C. SPACING SCHEDULE (IN.)		
BUILDING SIZE	MAX. LONGITUDINAL SPACING @ 40' SIDEWALLS	MAX. TRANSVERSE SPACING @ 11'-10" END WALLS
12'x40'	35" O.C.	12" O.C.

ANCHOR TYPE	SIMPSON SS STRONG-BOLT 2 ICC ESR-3037
ANCHOR SIZE (IN.)	½"Ø
MIN. CONC. THICKNESS (IN.)	4"
MIN. NOMINAL EMBED (IN.)	2¾"
HOLE DEPTH (IN.)	3"
MIN. CONC. EDGE DISTANCE - ANY DIRECTION (IN.)	9"
INSTALLATION TORQUE (FT-LB)	60

1. TORQUE TEST PER CBC 1910A.5 TORQUE TEST - MANUFACTURER'S RECOMMENDED INSTALLATION TORQUE AS APPROVED IN AN ICC-ESR PER C.B.C 1910A.5

SILL RESTRAINT

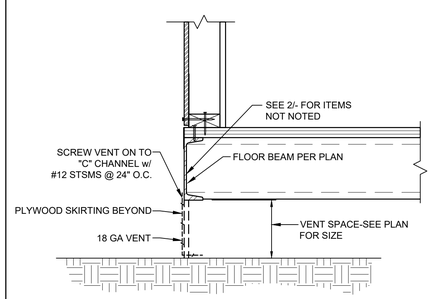

FOUNDATION DETAIL

SCALE: 1/4"=1'-0" 1

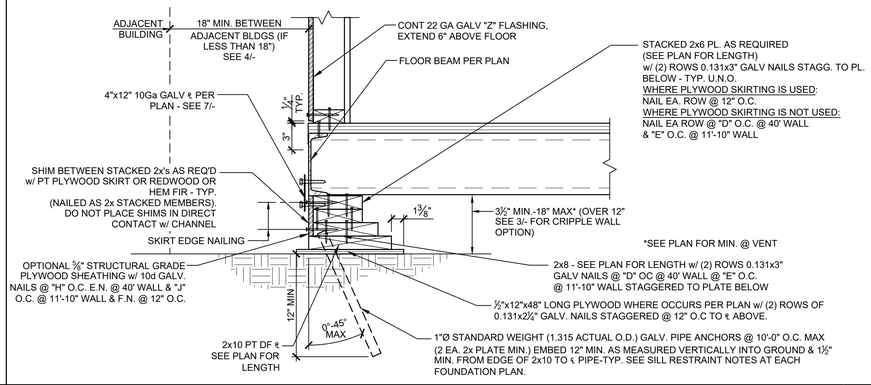

FOUNDATION DETAIL

SCALE: 1/4"=1'-0" 2

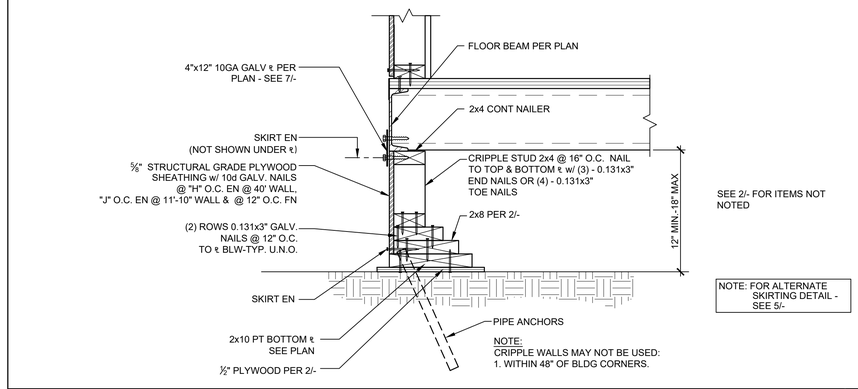

FOUNDATION DETAIL

SCALE: 1/4"=1'-0" 3

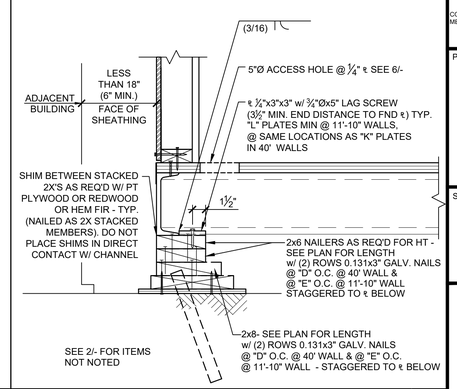

FOUNDATION DETAIL

SCALE: 1/4"=1'-0" 4

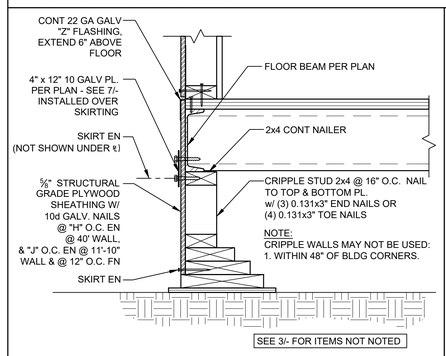

ALTERNATE SKIRTING DETAIL

SCALE: 1/4"=1'-0" 5

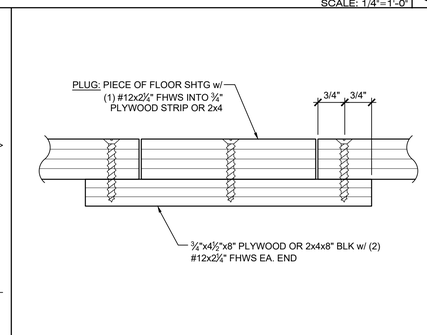

FILLER ACCESS HOLE DETAIL

SCALE: 1/4"=1'-0" 6

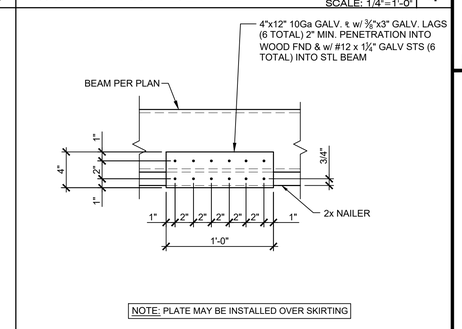

FOUNDATION DETAIL

SCALE: 1/4"=1'-0" 7

1. TOP OF WOOD PADS TO BE LEVEL.
2. DO NOT INSTALL BUILDINGS IN AREAS OF WATER LINES.
3. SITE TO BE GRADED TO PREVENT WATER PONDING BENEATH THE STRUCTURE.
4. FOUNDATION WOOD TO BE CUT PERPENDICULAR TO THE FACE GRAIN.
5. PER THE CONTRACT OF THIS PROJECT- THE BUILDING PAD MUST BE A MINIMUM OF 38'-0" FRONT TO REAR, BUILDING WIDTH PLUS 6'-0" SIDE TO SIDE AND SHALL NOT EXCEED 6" OUT OF LEVEL IN ANY DIRECTION.
6. PROJECT ARCHITECT SHOULD VERIFY THE NET AREA OF THE VENT COVER BE EQUAL TO OR LARGER THAN THE VENT AREA REQUIRED SHOWN ON THE TABLE.
7. VENT NET AREA REQUIRED (NFA) IS BASED ON A 1:150 VENTILATION RATIO OF THE NOMINAL BUILDING FLOOR AREA. VENT NFA PROVIDED IS THE ACTUAL VENT GROSS OPEN AREA WITH A MINIMUM REDUCTION PERCENTAGE OF 73% DUE TO THE VENT COVER.

SHEET NOTES

FOUNDATIONS:
ALL FOUNDATION MATERIALS IN CONTACT WITH THE GROUND SHALL BE PRESSURE TREATED OR REDWOOD EXCEPT SHIMS MAY BE REDWOOD, HEM FIR OR CEDAR. PRESSURE TREATED DOUGLAS FIR, HEM FIR, PLYWOOD ETC. SHALL BE VERIFIED BY A CERTIFICATE OF TREATMENT STATING: "THE MATERIAL IN THIS UNIT WAS TREATED PER 2019 CALIFORNIA BUILDING CODE. ALL MATERIAL FOR USE IN GROUND CONTACT SHALL BE STAMPED "FOR GROUND CONTACT" (U1 & T1). ALL MATERIAL NOT USED IN GROUND CONTACT SHALL BE HF#2 OR DF#2 "FOR ABOVE GROUND USE." THE IN-PLANT INSPECTOR SHALL VERIFY THAT ALL PRESSURE TREATED FOUNDATION MATERIAL IS CUT FROM AWPA STAMPED STOCK AND THAT ALL CUTS AND HOLES ARE RETREATED PER SPECIFICATIONS. U1 AND T1 MATERIAL SHALL BE BANDED SEPARATELY FOR SHIPMENT TO THE JOB SITE. THE IN-PLANT INSPECTOR'S VERIFICATION OF EACH BANDED UNIT SHALL BE ATTACHED TO THE MATERIAL. CONCRETE OR CONCRETE BLOCK FOUNDATIONS ARE NOT ALLOWED. THE FOOTING DESIGN SHALL PROVIDE FOR SHIMS AND BLOCKS NECESSARY TO PERMIT INSTALLATION ON SITES NOT LEVEL, BUT WITHIN TOLERANCE ALLOWED. INSTALLATION SHALL BE PERMITTED ON EITHER SOIL, CONCRETE OR A/C PAVING, HAVING SUITABLE DESIGN BEARING CAPACITY, THE BUILDINGS SHALL BE SECURELY FASTENED TO THE FOUNDATIONS. THE FOUNDATIONS AND THE METHOD OF FASTENING SHALL BE SUBJECT TO APPROVAL BY THE ARCHITECT AND DSA. PADS SHALL BE DESIGNED FOR A MAXIMUM OF 1000 PSF LOAD ON THE SOIL. PADS SHALL NOT BE PLACED ON TURF.

A VAPOR RETARDING MOISTURE BARRIER SHALL BE INSTALLED UNDER THE FLOOR WHEN THE BUILDING IS INSTALLED LESS THAN 12" ABOVE THE SOIL. A BARRIER IS NOT REQUIRED AT HEIGHT IF THE BUILDING IS INSTALLED OVER CONCRETE (INCLUDING A RAT SLAB) OR A/C/ PAVING.

KEY NOTES

1. ½"x12" WIDE x 48" LONG P.T. STRUCTURAL PLYWOOD w/ FACE GRAIN IN SHORT DIRECTION (CDX PLYWOOD)
2. ½"x12" WIDE x 24¾" LONG P.T. STRUCTURAL PLYWOOD w/ FACE GRAIN IN SHORT DIRECTION (CDX PLYWOOD)
3. 2x10x8'-0" LONG ℄
4. 2x8x8'-0" LONG ℄
5. ½"x12" WIDE x 12" LONG P.T. STRUCTURAL PLYWOOD w/ FACE GRAIN IN SHORT DIRECTION (CDX PLWOOD)
6. 2x8x4'-0" LONG ℄
7. 2x10x4'-0" LONG ℄
8. MULTIPLE 2x6x8'-0" LONG NAILER AS REQ'D FOR HEIGHT MULTIPLE 2x6x4'-0" LONG NAILER
9. AS REQ'D FOR HEIGHT
10. 2x10x6'-3/4" LONG ℄
11. 2x8x6'-3/4" LONG ℄
12. MULTIPLE 2x6x6'-3/4" LONG NAILER AS REQ'D FOR HEIGHT
13. MULTIPLE 2x6x1'-0" LONG NAILER AS REQ'D FOR HEIGHT
14. 2x10x1'-0" LONG ℄
15. 2x8x1'-0" LONG ℄
16. 4"x12"x10 GA. ℄ PER 2/-

● 1"Ø GALVANIZED PIPE LOCATIONS - TYPICAL.

IDENTIFICATION STAMP
DIV. OF THE STATE ARCHITECT
APP: 04-125522 INC:
REVIEWED FOR
SS ☑ FLS ☑ ACS ☑
DATE: 08/19/2026

American Modular Systems
787 Spreckels Ave., Manteca, CA 95336
Phone (209) 825-1921 Fax (209) 825-7018
www.americanmodular.com

INTELLECTUAL-PROPERTY & PROPRIETARY RIGHTS STATEMENT
COPYRIGHT © AMERICAN MODULAR SYSTEMS (AMS)
AMS OWNS ALL COPYRIGHT AND OTHER INTELLECTUAL-PROPERTY AND PROPRIETARY RIGHTS IN THESE DRAWINGS, SPECIFICATIONS, AND THE MATERIAL CONTAINED HEREIN. CERTAIN ELEMENTS SHOWN IN THESE DOCUMENTS ARE REGISTERED TRADEMARKS OF AMS. ALL PATENTABLE MATERIALS CONTAINED IN THESE DOCUMENTS AND ORIGINATING WITH AMS WILL REMAIN THE SOLE PROPERTY OF AMS. THESE DRAWING, SPECIFICATIONS, AND THE MATERIAL CONTAINED HEREIN MAY NOT BE REPRODUCED, TRANSMITTED, COPIED, DISTRIBUTED, MODIFIED, OR OTHERWISE DISPOSED OF (DIRECTLY OR INDIRECTLY) AND MAY NOT BE USED (IN WHOLE OR IN PART) TO ASSIST IN THE CONSTRUCTION, DESIGN, OR OTHER MAKING OF, OR FOR THE PURPOSE OF FURNISHING ANY INFORMATION FOR THE CONSTRUCTION, DESIGN, OR OTHER MAKING OF, ANY BUILDINGS (MODULAR OR OTHERWISE), DRAWINGS, SPECIFICATIONS, PRINTS, APPARATUS, OR PARTS THEREOF, EXCEPT AS EXPRESSLY PERMITTED BY WRITTEN CONSENT OF, OR IN A WRITTEN AGREEMENT WITH, AMS. SUBMITTAL OR DISTRIBUTION TO MEET OFFICIAL REGULATORY REQUIREMENTS WILL NOT BE CONSTRUED AS PUBLICATION IN DEROGATION OF AMS'S COPYRIGHT OR OTHER INTELLECTUAL-PROPERTY OR PROPRIETARY RIGHTS.

PRE-CHECKED SET NAME
12' x 40' STANDARD MODULAR BUILDING

SITE SPECIFIC PROJECT NAME

APPROVED
DIV. OF THE STATE ARCHITECT
APP: 04-122042 PC
REVIEWED FOR
SS ☑ FLS ☑ ACS ☑ CG ☑
DATE: 02/15/2024

☐ 2022 CBC PRE-CHECK (PC) DOCUMENT
A SEPARATE PROJECT APPLICATION FOR CONSTRUCTION IS REQUIRED

MANUFACTURER PROFESSIONAL OF RECORD ON PC

LICENSED ARCHITECT
PATRICK CONNOR HIGHT
No. C12631
Ren. 3-31-25
STATE OF CALIFORNIA

REGISTERED PROFESSIONAL ENGINEER
MANNY D. PARSA
No. S3380
STRUCTURAL
STATE OF CALIFORNIA
RST#22214

02-08-24

THESE DRAWINGS ARE PRELIMINARY AND NOT FOR CONSTRUCTION UNLESS STAMPED & SIGNED BY THE DESIGN PROFESSIONAL OF RECORD.

REVISIONS
1
2
3
4

DRAWN BY:	
SCALE:	AS NOTED
DATE:	MM/DD/YY
PROJECT NO:	XXXX-XX

SHEET TITLE:
WOOD FOUNDATION PLAN & DETAILS
- PLYWOOD FLOORS ONLY
- 100 PSF MAX FLOOR L.L.

SHEET NUMBER:
S2.0

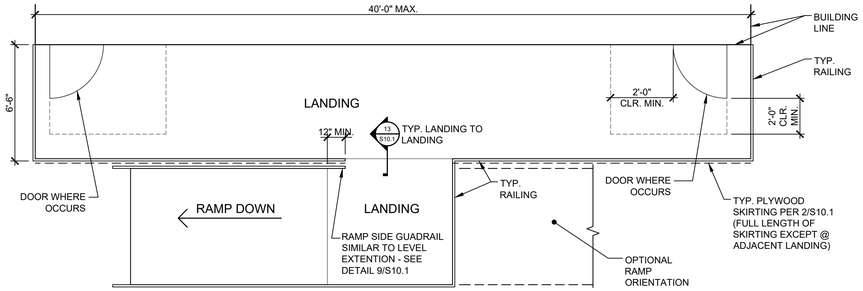

TYPICAL ARCHITECTURAL PLAN

SCALE: 1/4"=1'-0"

RAMP AND LANDING DATA

OCCUPANCY	TO MATCH BUILDING
SNOW AND ICE LOAD	NOT CONSIDERED
RAMP LIVE LOAD (MAX. PSF)	100 (1,000# CONCENTRATED LD)
DESIGN DEAD LOADS (MAX PSF)	12.0
ALLOWABLE SOIL PRESSURE (PSF)	1,000 FOR WOOD FOUNDATION
LATERAL LOADS	TO MATCH MAX BUILDING REQUIREMENTS
LANDING - PERPENDICULAR TO RAMP DIRECTION & RAMP	OTHER SELF-SUPPORTING STRUCTURE (SEE FRAMES - 7/S10.1) R=1.25 I = 1.0 Ωo = 2.0
LANDING - PARALLEL TO RAMP DIRECTION	PLYWOOD SKIRTING (SHEARWALL)* (SEE DETAIL 2/S10.1)

* NOTE:
LANDING SECTIONS BUILT-UP AGAINST THE BUILDING ARE NOT REQUIRED TO HAVE SKIRTING PER DETAIL 2/S10.1.
THE LANDING IS DESIGNED AS AN OPEN FRONT DIAPHRAGM TO BE LATERALLY CANTILEVERED OFF THE FRONT SKIRTING AND THE FRAMES DETAILED ON 7/S10.1.

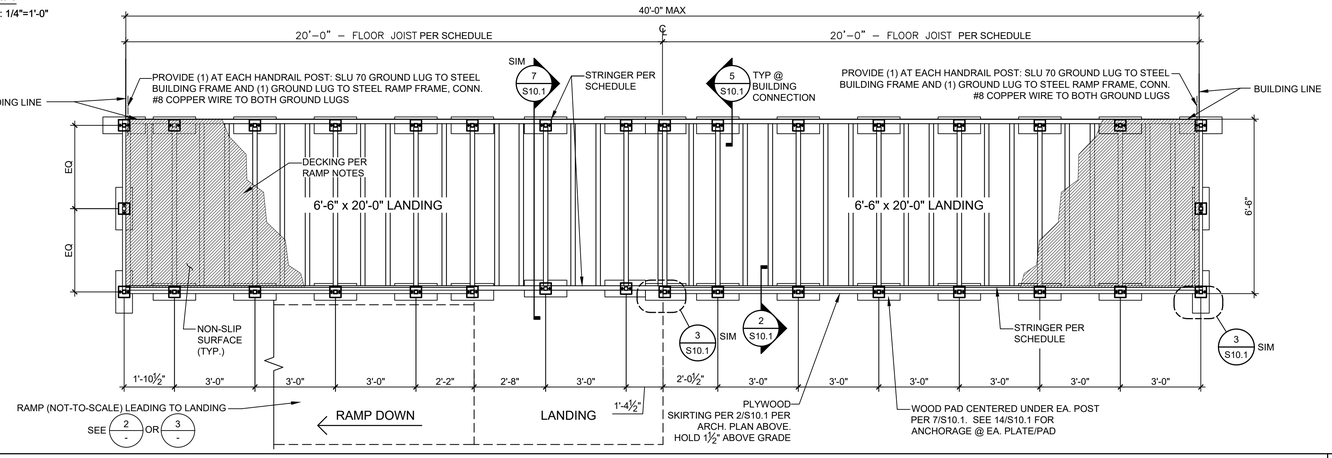

LANDING PLAN OPTION

SCALE: 3/8" = 1'-0" | 1

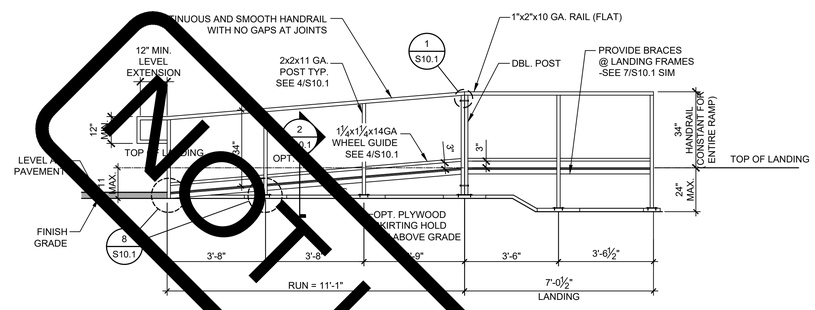

NOT USED

NOTE: RAMP & LANDING TO BE FABRICATED IN SECTIONS (2 MIN.) FOR MOVING

RAMP ELEVATION

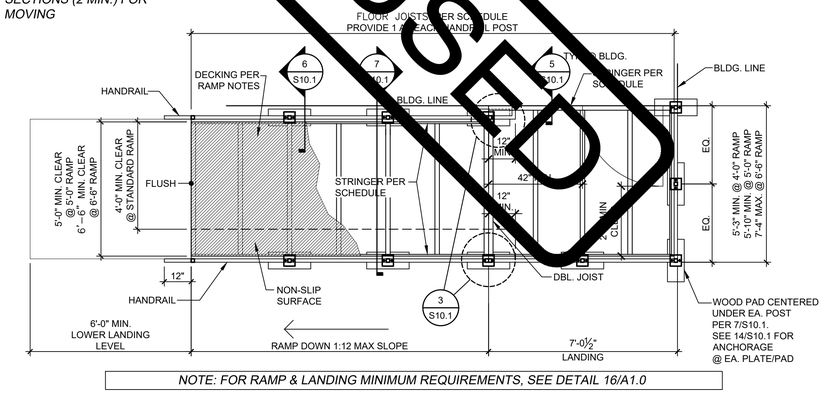

NOTE: FOR RAMP & LANDING MINIMUM REQUIREMENTS, SEE DETAIL 16/A1.0

11-FOOT TYPICAL RAMP ☐

SCALE: 3/8" = 1'-0" | 2

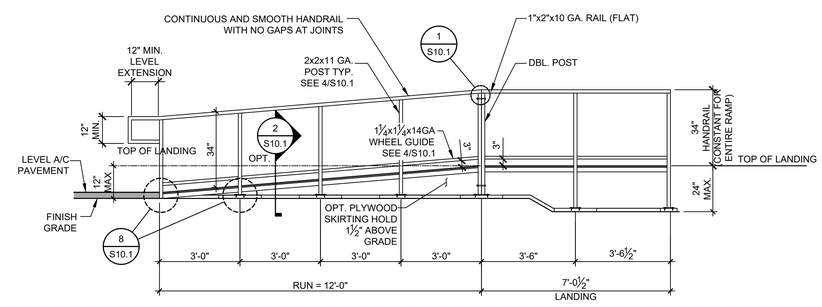

NOTE: RAMP & LANDING TO BE FABRICATED IN SECTIONS (2 MIN.) FOR MOVING

RAMP ELEVATION

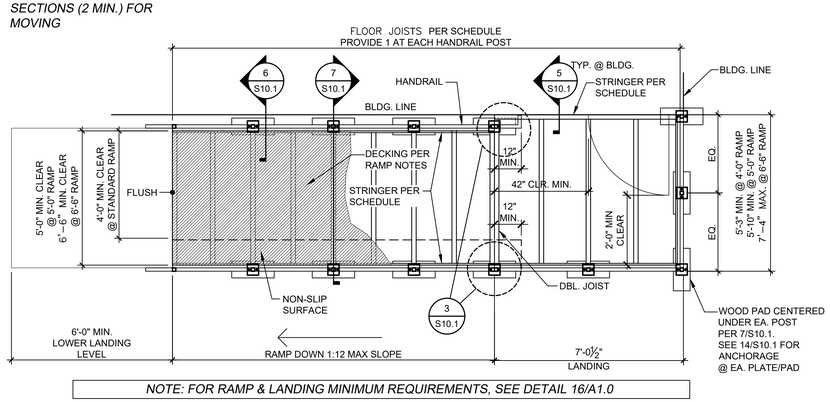

NOTE: FOR RAMP & LANDING MINIMUM REQUIREMENTS, SEE DETAIL 16/A1.0

12-FOOT TYPICAL RAMP ☒

SCALE: 3/8" = 1'-0" | 3

1. ENTRY RAMP AND LANDING SPECIFICATIONS

EACH BUILDING SHALL HAVE A RAMP AND LANDING TO CONFORM TO TITLE 24 C.C.R. SECTIONS 11B-405, 1010 AND 1012. THE RAMP AND LANDING STRUCTURES INCLUDING HANDRAILS AND WHEEL GUIDE RAILS ARE TO BE PREFABRICATED METAL IN SECTIONS THAT ARE DEMOUNTABLE FOR MOVING AND REINSTALLATION AT A NEW SITE.
HANDRAILS AND WHEEL GUIDE RAILS SHALL BE CONTINUOUS AND SMOOTH WITH NO GAPS AT JOINTS. DESIGN SHALL BE SUCH THAT HEIGHT ADJUSTMENT CAN BE MADE AT THE INSTALLATION SITE. THE RAMP AND LANDING SURFACE SHALL BE ¾" MARINE GRADE PLYWOOD OR 11GA SHEET METAL. RAMP AND LANDING SHALL HAVE A NON-SLIP SURFACE FINISH APPLIED. NON-SLIP FINISH SHALL BE AMCOE GRIP II MANUFACTURED BY AMERICAN ABRASIVE METALS OR COMPARABLE. ALL RAMP SURFACES SHALL BE PAINTED AS INDICATED IN SECTION 9B ON SHEET N1.0. RAMPS SHALL HAVE HANDRAILS ON BOTH SIDES. WALL MOUNTED HANDRAILS SHALL BE OF SIMILAR CONSTRUCTION TO THE INTEGRAL RAMP HANDRAIL AND MOUNTED AT THE SAME HEIGHT. RAMP AND LANDING SHALL BE FULLY SKIRTED WITH THE SAME MATERIAL USED FOR BUILDING SKIRT. SIDES OF RAMP AND LANDING THAT DO NOT ADJOIN BUILDING WALL SHALL BE SKIRTED. ALL EDGES OF THE PLYWOOD SKIRT SHALL BE SUPPORTED AND PROTECTED FROM WEATHER. FOUNDATION MEMBERS SHALL BE AS FOR BUILDING FOUNDATION. ONLY THE FOUNDATION PAD RESTING ON GRADE MAY EXTEND BEYOND THE OUTSIDE FACE OF THE SKIRT 1" MAXIMUM.

2. FLOOR DECKING

¾" MARINE EXTERIOR A.P.A. 48/24 PLYWOOD w/ NON-SLIP SURFACE. DECK SURFACES SHALL BE SEALED ON ALL SIDES. FASTENED TO STEEL FRAMING WITH #10 SELF DRILLING BUGLE HEAD 1" GALV. SCREWS OR 0.144"Øx1 ½" MIN. GALV ET&F PINS (IAPMO REPORT ER-335) OR EQUIV. @ 6" O.C. EDGES AND 12" O.C. FIELD, TYP.
PROVIDE ATTACHMENT @ 6" O.C. TO JOISTS BETWEEN HANDRAIL POST AS SHOWN ON DETAIL 7/S10.1.

3. ALT. FLOOR DECKING

10 GA. SHEET METAL WITH NON-SLIP SURFACE (0.8 MIN COEFFICIENT OF FRICTION) ATTACHED TO STEEL FRAMING WITH #12x1" STS @ 6" O.C. E.N. & 12" O.C. F.N.
PROVIDE ATTACHMENT @ 6" O.C. TO JOISTS BETWEEN HANDRAIL POST AS SHOWN ON DETAIL 7/S10.1. MATERIAL STRENGTH SHALL BE 36 KSI MIN. w/ A MODULUS OF ELASTICITY OF 29,500 KSI ± 3%. ACCEPTABLE STEEL MATERIALS INCLUDE, BUT ARE NOT LIMITED TO, THE FOLLOWING: ASTM A1011 SS GRADE 36 (Fy=36 KSI) ASTM A653 SS GRADE 37 (Fy=37 KSI) ASTM A1008 SS GRADE 40 (Fy=40 KSI).

4. GROUNDING OF BUILDING COMPONENT

CONTRACTOR SHALL BE RESPONSIBLE FOR PROVIDING NECESSARY CONNECTORS TO GROUND THE METAL PORTIONS OF THE BUILDING (I.E. FRAME, RAMP, ETC.)
GROUNDING ROD, WIRES AND TESTING SHALL BE PROVIDED BY OTHER AND MEET THE REQUIREMENTS OF I.R. E-1 ISSUED BY D.S.A.

5. RAMP SLOPE

RAMPS SHALL NOT SLOPE MORE THAN 1" RISE OVER A 12" RUN (1:12). CROSS SLOPE SHALL NOT EXCEED 1:48.

6. HANDRAILS

HANDRAILS SHALL BE INSTALLED ON BOTH SIDES OF RAMP AT 34" HIGH. HANDRAILS SHALL BE AT A CONSISTENT VERTICAL HEIGHT FOR THE ENTIRE STRUCTURE.

7. RAMP PLANNING

DUE TO VARYING SITE CONDITIONS, THE MAXIMUM HEIGHT OF FINISH FLOOR FROM GRADE IS 24", THEREFORE IT IS POSSIBLE THAT THE ACCESS RAMP ATTACHED TO THE BUILDING COULD BE 24'-0" LONG AT A SLOPE OF 1:12. ARCHITECT MUST TAKE INTO ACCOUNT THAT THE RAMP SUPPLIED BY AMS, INC. IS 12'-0" LONG AT A SLOPE OF 1:12, THEREFORE THE ARCHITECT WILL HAVE TO DESIGN AND PROVIDE SUFFICIENT DETAILS OF RAMP EXTENSIONS AND BOTTOM LANDING DEPENDING ON PARTICULAR SITE CONDITIONS. IN NO WAY IS AMS, INC. RESPONSIBLE FOR ANY RAMP EXTENSION EXCEEDING THE ORIGINAL PLAN AS SHOWN ON THIS SHEET.

8. LANDINGS

OVERALL LENGTH OF A LANDING MAY VARY FROM 60" UP TO 40'-0". LENGTH MUST CONFORM TO APPROVED LANDING. SLOPE LANDING NOT TO EXCEED 1:48 TO PREVENT WATER PONDING.

9. FASTENERS

ALL EXTERIOR USE FASTENERS SHALL BE GALVANIZED OR STAINLESS STEEL.

10. WELDING

THE DESIGN PROFESSIONAL HAS EXEMPTED THIS RAMP FROM SPECIAL INSPECTION REQUIREMENTS FOR MATERIAL IDENTIFICATION AND STRUCTURAL WELDING. RAMP SHALL NOT BE MODIFIED NOR HAVE SHIMS ADDED CAUSING THE DISTANCE BETWEEN THE HIGHEST RAMP WALKING SURFACE AND THE ADJACENT GRADE TO BE MORE THAN 30 INCHES. IF THIS CONDITION IS NOT MET, STRUCTURAL TESTING AND/OR INSPECTION WILL BE REQUIRED TO VERIFY MATERIALS AND STRUCTURAL WELDING. THIS APPLIES TO SCOPES OF WORK INCLUDING NEW CONSTRUCTION, ALTERATION, OR RELOCATION OF THE RAMP.

RAMP NOTES

RAMP/LANDING WIDTH	STRINGER SCHEDULE(1) MAX STRINGER SPANS (FT) 3'-0"	3'-6"	3'-9"
4'-0"	TUBE 2x2x11 GA	TUBE 2x2x11 GA	HSS 2x2x3/16
5'-0"	TUBE 2x2x11 GA	TUBE 2x2x11 GA	HSS 2x2x3/16
~~5'-10"~~	~~TUBE 2x2x11 GA~~	~~TUBE 2x2x11 GA~~	~~HSS 2x2x3/16~~
6'-6"	TUBE 2x2x11 GA	TUBE 2x2x11 GA	HSS 2x2x3/16
~~7'-4"~~	~~TUBE 2x2x11 GA~~	~~TUBE 2x2x11 GA~~	~~HSS 2x2x3/16~~

(1) SEE 4/S10.1 FOR LIGHT GAUGE STEEL TUBE PROPERTIES. SIZES INDICATED ARE MINIMUM. THICKER TUBES MAY BE USED. HSS 2x2x1/8 OR LARGER PER 11/S10.1 MAY BE SUBSTITUTED FOR LIGHT GAUGE TUBES.

RAMP/ LANDING WIDTH	JOIST SCHEDULE(1) MAX JOIST SPACING: TUBE 2x2x14 GA. DECKING PLY	TUBE 2x2x14 GA. DECKING 10 GA.	TUBE 2x2x11 GA. DECKING PLY	TUBE 2x2x11 GA. DECKING 10 GA.	HSS 2x2x5/8 DECKING PLY	HSS 2x2x5/8 DECKING 10 GA.	HSS 2x2x3/16 DECKING PLY	HSS 2x2x3/16 DECKING 10 GA.	HSS 2x2x1/4 DECKING PLY	HSS 2x2x1/4 DECKING 10 GA.
4'-0"	16"	11"	16"	14"	16"	14"	16"	14"	16"	14"
5'-0"	14"	11"	16"	14"	16"	14"	16"	14"	16"	14"
~~5'-5½"~~	~~-~~	~~-~~	~~12"~~	~~12"~~	~~12"~~	~~12"~~	~~16"~~	~~14"~~	~~16"~~	~~14"~~
5'-10"	-	-	12"	12"	12"	12"	15"	14"	16"	14"
6'-6"	-	-	-	-	-	-	12"	12"	14"	14"
~~7'-4"~~	~~-~~	~~-~~	~~-~~	~~-~~	~~-~~	~~-~~	~~9"~~	~~9"~~	~~11"~~	~~11"~~

(1) SEE 4/S10.1 FOR LIGHT GAUGE STEEL TUBE PROPERTIES, AND 11/S10.1 FOR HSS PROPERTIES

RAMP/ LANDING MEMBER SCHEDULE

IDENTIFICATION STAMP
DIV. OF THE STATE ARCHITECT
APP: 04-125522 INC:
REVIEWED FOR
SS ☑ FLS ☑ ACS ☑
DATE: 08/19/2026

American Modular Systems
787 Spreckels Ave., Manteca, CA 95336
Phone (209) 825-1921 Fax (209) 825-7018
www.americanmodular.com

INTELLECTUAL-PROPERTY & PROPRIETARY RIGHTS STATEMENT
COPYRIGHT © AMERICAN MODULAR SYSTEMS (AMS)
AMS OWNS ALL COPYRIGHT AND OTHER INTELLECTUAL-PROPERTY AND PROPRIETARY RIGHTS IN THESE DRAWINGS, SPECIFICATIONS, AND THE MATERIAL CONTAINED HEREIN. CERTAIN ELEMENTS SHOWN IN THESE DOCUMENTS ARE REGISTERED TRADEMARKS OF AMS. ALL PATENTABLE MATERIALS CONTAINED IN THESE DOCUMENTS AND ORIGINATING WITH AMS WILL REMAIN THE SOLE PROPERTY OF AMS. THESE DRAWING, SPECIFICATIONS, AND THE MATERIAL CONTAINED HEREIN MAY NOT BE REPRODUCED, TRANSMITTED, COPIED, DISTRIBUTED, MODIFIED, OR OTHERWISE DISPOSED OF (DIRECTLY OR INDIRECTLY) AND MAY NOT BE USED (IN WHOLE OR IN PART) TO ASSIST IN THE CONSTRUCTION, DESIGN, OR OTHER MAKING OF, OR FOR THE PURPOSE OF FURNISHING ANY INFORMATION FOR THE CONSTRUCTION, DESIGN, OR OTHER MAKING OF, ANY BUILDINGS (MODULAR OR OTHERWISE), DRAWINGS, SPECIFICATIONS, PRINTS, APPARATUS, OR PARTS THEREOF, EXCEPT AS EXPRESSLY PERMITTED BY WRITTEN CONSENT OF, OR IN A WRITTEN AGREEMENT WITH, AMS. SUBMITTAL OR DISTRIBUTION TO MEET OFFICIAL REGULATORY REQUIREMENTS WILL NOT BE CONSTRUED AS PUBLICATION IN DEROGATION OF AMS'S COPYRIGHT OR OTHER INTELLECTUAL-PROPERTY OR PROPRIETARY RIGHTS.

PRE-CHECKED SET NAME
12' x 40' STANDARD MODULAR BUILDING

SITE SPECIFIC PROJECT NAME

APPROVED
DIV. OF THE STATE ARCHITECT
APP: 04-122042 PC
REVIEWED FOR
SS ☑ FLS ☑ ACS ☑ CG ☑
DATE: 02/15/2024

☐ 2022 CBC PRE-CHECK (PC) DOCUMENT
A SEPARATE PROJECT APPLICATION FOR CONSTRUCTION IS REQUIRED.

MANUFACTURER PROFESSIONAL OF RECORD ON PC

LICENSED ARCHITECT
PATRICK MANN
No. C12631
Ren. 3-31-25
STATE OF CALIFORNIA

REGISTERED PROFESSIONAL ENGINEER
DAVID D. FRANK
No. S3380
STRUCTURAL
STATE OF CALIFORNIA
RST#22214

02-08-24
THESE DRAWINGS ARE PRELIMINARY AND NOT FOR CONSTRUCTION UNLESS STAMPED & SIGNED BY THE DESIGN PROFESSIONAL OF RECORD.

REVISIONS
1
2
3
4

DRAWN BY:
SCALE: AS NOTED
DATE: MM/DD/YY
PROJECT NO: XXXX-XX

SHEET TITLE:
TYPICAL RAMP PLANS & NOTES

SHEET NUMBER:
S10.0

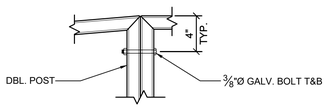

DETAIL
SCALE: 3/8"=1'-0" | 1

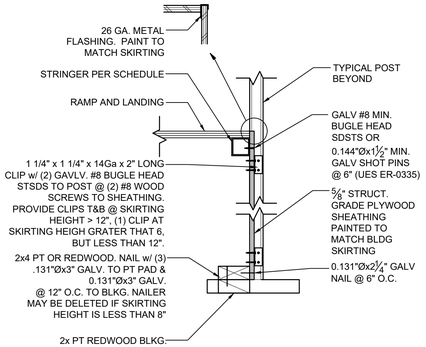

RAMP SKIRT DETAIL
SCALE: 3/8"=1'-0" | 2

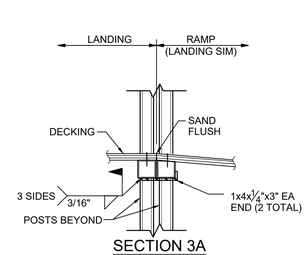

SECTION 3A

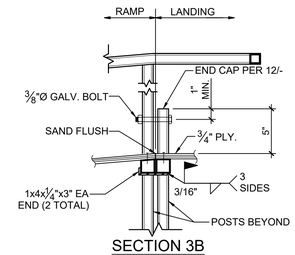

SECTION 3B

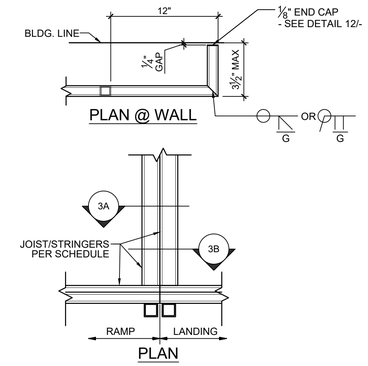

PLAN @ WALL

PLAN

RAMP TO LANDING CONNECTION DETAIL
SCALE: 3/8"=1'-0" | 3

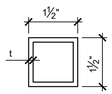

1½"x1½"x11 GA. TUBE

A = 0.602 IN^2
Sx = 0.244 IN^3
Ix = 0.183 IN^4
t = 0.112" MIN.
(0.1175" DESIGN)

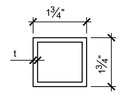

1¾"x1¾"x11 GA. TUBE

A = 0.725 IN^2
Sx = 0.356 IN^3
Ix = 0.312 IN^4
t = 0.112" MIN.
(0.1175" DESIGN)

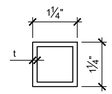

1¼"x1¼"x14 GA. TUBE

A = 0.319 IN^2
Sx = 0.114 IN^3
Ix = 0.072 IN^4
t = 0.068" MIN.
(0.0713" DESIGN)

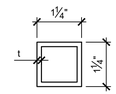

1¼"x1¼"x11 GA. TUBE

A = 0.497 IN^2
Sx = 0.163 IN^3
Ix = 0.102 IN^4
t = 0.112" MIN.
(0.1175" DESIGN)

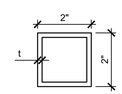

2"x2"x11 GA TUBE

A = 0.837 IN^2
Sx = .479 IN^3
Ix = .479 IN^4
t = 0.112" MIN.
(0.1175" DESIGN)

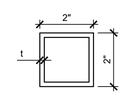

2"x2"x14 GA TUBE

A = 0.533 IN^2
Sx = 0.324 IN^3
Ix = 0.324 IN^4
t = 0.068" MIN.
(0.0713" DESIGN)

MATERIAL STRENGTH SHALL BE 36 KSI MIN. w/ A MODULUS OF ELASTICITY OF 29,500 KSI ± 3%. ACCEPTABLE STEEL MATERIALS INCLUDE, BUT ARE NOT LIMITED TO, THE FOLLOWING:

ASTM A1011 SS GRADE 36 (Fy=36 KSI)
ASTM A653 SS GRADE 37 (Fy=37 KSI)
ASTM A1008 SS GRADE 40 (Fy=40 KSI)
ASTM A500 (Fy = 36 KSI MIN)

MATERIAL SHALL BE GIVEN A RUST INHIBITIVE COATING.

THE MATERIAL THICKNESS OF LIGHT GAUGE STEEL MEMBERS, IN THEIR END US, SHALL MEET OR EXCEED THE MINIMUM BASE METAL THICKNESS SPECIFIED ABOVE. THE MATERIAL GAUGE DESIGNATION SHALL BE USED AS REFERENCE ONLY. SPECIFIED STEEL TUBE THICKNESSES ARE MINIMUM. THICKER TUBES MAY BE USED.

LIGHT GAUGE STEEL TUBE PROPERTIES
SCALE: 3/8"=1'-0" | 4

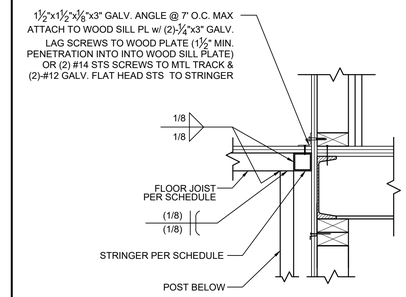

LANDING ATTACHMENT DETAIL
SCALE: 3/8"=1'-0" | 5

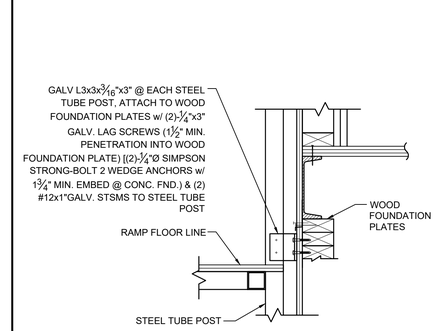

RAMP CONNECTION DETAIL
SCALE: 3/8"=1'-0" | 6

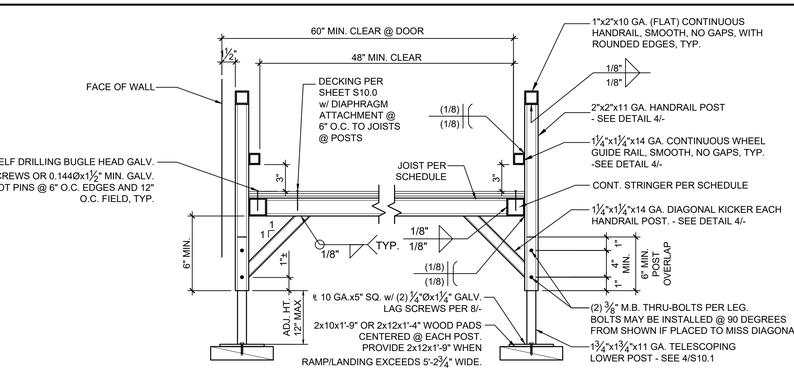

HANDRAIL & RAMP SECTION
SCALE: 3/8"=1'-0" | 7

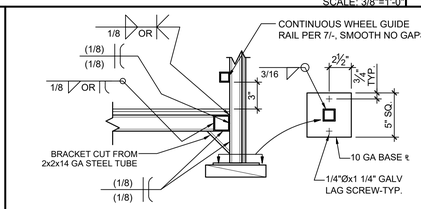

POST @ LOWER END

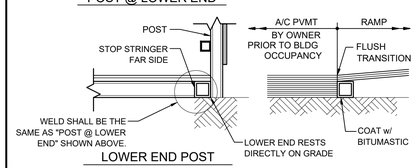

LOWER END POST

DETAIL
SCALE: 3/8"=1'-0" | 8

NOTE:
THE ZERO CLEARANCE RAMP LAYOUT IS AN OPTIONAL METHOD ONLY. IT MUST BE APPROVED IN WRITING, IF AMS IS TO PROVIDE THIS OPTION. ARCHITECT/OWNER MUST TAKE INTO ACCOUNT VARYING SITE CONDITIONS, GRADE CHANGES, BUILDING SEPARATION, ETC.

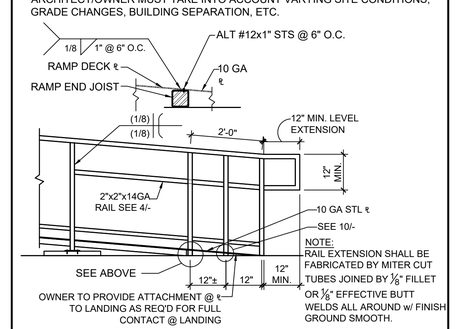

TYP. ZERO CLEARANCE RAMP DETAIL
SCALE: 3/8"=1'-0" | 9

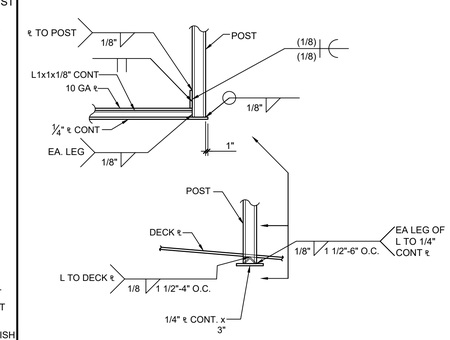

DETAIL
SCALE: 3/8"=1'-0" | 10

1. STEEL IN CONTACT WITH GROUND OR PT WOOD FOUNDATION PLATE SHOULD BE GALVANIZED.

GENERAL CONNECTION NOTES

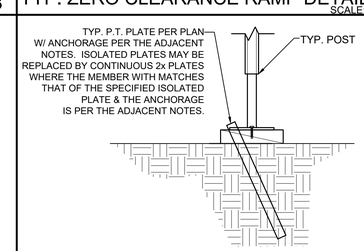

P.T. PLATE ANCHORAGE (ISOLATED PLATES)
ON SOIL, A/C OR CONCRETE PAVING
1"Ø STANDARD WEIGHT (1.315 ACTUAL O.D.) HOT DIPPED GALV. PIPE PER PLATE w/ 12" MIN. PENETRATION MEASURED VERTICALLY BELOW SOIL OR PAVING SURFACE. DRILL PLATE 1 ⅜"Ø MAX. PIPE MAY BE DRIVEN MAX. PIPE MAY BE DRIVEN MAX 45° ANGLE TO VERTICAL.

ALTERNATE ON CONC. PAVING ONLY:
(2) SIMPSON SS (STAINLESS STEEL) STRONG-BOLT 2 THRU EA. PLATE w/ 3 ½" MIN. CONC. EMBEDMENT. SEE SHTS. S2.0-S2.3 FOR INSTALLATION REQUIREMENTS.

P.T. PLATE ANCHORAGE (CONTINUOUS PLATES)
ON SOIL, A/C OR CONCRETE PAVING
1"Ø STANDARD WEIGHT (1.315 ACTUAL O.C.) HOT DIPPED GALV. PIPE @ 4'-0" O.C. MAX. w/ 12" MIN. PENETRATION MEASURED VERTICALLY BELOW SOIL OR PAVING SURFACE. PROVIDE A MIN. OF (2) PIPE ANCHORS FOR ANY SECTION OF PLATE. DRILL PLATE 1 ⅜"Ø MAX. PIPE MAY BE DRIVEN MAX 45° ANGLE TO VERTICAL.

ALTERNATE ON CONC. PAVING ONLY:
SIMPSON SS (STAINLESS STEEL) STRONG-BOLT 2 THRU PLATE @ 3'-0" O.C. MAX. w/ 3 ½" MIN. CONC. EMBEDMENT. PROVIDE A MIN. OF (2) ANCHORS FOR ANY SECTION OF PLATE. SEE SHTS. S2.0-S2.3 FOR INSTALLATION REQUIREMENTS.

P.T PLATE ANCHORAGE
SCALE: 3/8" = 1'-0" | 14

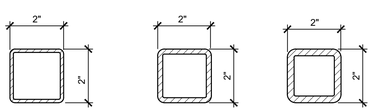

HSS 2x2x1/8
ASTM A500 GRADE B
Fy = 46 KSI
A = 0.840 IN^2
Sx = 0.4863 IN^3
Ix = 0.486 IN^4

HSS 2x2x3/16
ASTM A500 GRADE B
Fy = 46 KSI
A = 1.19 IN^2
Sx = 0.641 IN^3
Ix = 0.641 IN^4

HSS 2x2x1/4
ASTM A500 GRADE B
Fy = 46 KSI
A = 1.51 IN^2
Sx = 0.747 IN^3
Ix = 0.747 IN^4

MATERIAL SHALL BE GIVEN A RUST INHIBITIVE COATING

HSS PROPERTIES
11

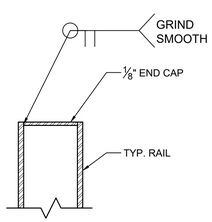

NOTE: END CAP MAY ALSO BE PLASTIC SNAP-ON CAP

END CAP DETAIL
SCALE: N.T.S. | 12

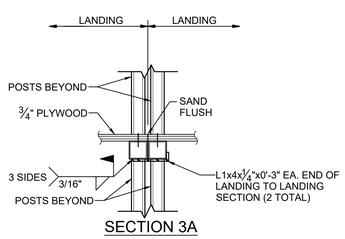

SECTION 3A

LANDING TO LANDING CONNECTION
SCALE: 3/8" = 1'-0" | 13

IDENTIFICATION STAMP
DIV. OF THE STATE ARCHITECT
APP: 04-125522 INC:
REVIEWED FOR
SS ☑ FLS ☑ ACS ☑
DATE: 08/19/2026

American Modular Systems
787 Spreckels Ave., Manteca, CA 95336
Phone (209) 825-1921 Fax (209) 825-7018
www.americanmodular.com

INTELLECTUAL-PROPERTY & PROPRIETARY RIGHTS STATEMENT
COPYRIGHT © AMERICAN MODULAR SYSTEMS (AMS)
AMS OWNS ALL COPYRIGHT AND OTHER INTELLECTUAL-PROPERTY AND PROPRIETARY RIGHTS IN THESE DRAWINGS, SPECIFICATIONS, AND THE MATERIAL CONTAINED HEREIN. CERTAIN ELEMENTS SHOWN IN THESE DOCUMENTS ARE REGISTERED TRADEMARKS OF AMS. ALL PATENTABLE MATERIALS CONTAINED IN THESE DOCUMENTS AND ORIGINATING WITH AMS WILL REMAIN THE SOLE PROPERTY OF AMS. THESE DRAWING, SPECIFICATIONS, AND THE MATERIAL CONTAINED HEREIN MAY NOT BE REPRODUCED, TRANSMITTED, COPIED, DISTRIBUTED, MODIFIED, OR OTHERWISE DISPOSED OF (DIRECTLY OR INDIRECTLY) AND MAY NOT BE USED (IN WHOLE OR IN PART) TO ASSIST IN THE CONSTRUCTION, DESIGN, OR OTHER MAKING OF, OR FOR THE PURPOSE OF FURNISHING ANY INFORMATION FOR THE CONSTRUCTION, DESIGN, OR OTHER MAKING OF, ANY BUILDINGS (MODULAR OR OTHERWISE), DRAWINGS, SPECIFICATIONS, PRINTS, APPARATUS, OR PARTS THEREOF, EXCEPT AS EXPRESSLY PERMITTED BY WRITTEN CONSENT OF, OR IN A WRITTEN AGREEMENT WITH, AMS. SUBMITTAL OR DISTRIBUTION TO MEET OFFICIAL REGULATORY REQUIREMENTS WILL NOT BE CONSTRUED AS PUBLICATION IN DEROGATION OF AMS'S COPYRIGHT OR OTHER INTELLECTUAL-PROPERTY OR PROPRIETARY RIGHTS.

PRE-CHECKED SET NAME
12' x 40' STANDARD MODULAR BUILDING

SITE SPECIFIC PROJECT NAME

APPROVED
DIV. OF THE STATE ARCHITECT
APP: 04-122042 PC
REVIEWED FOR
SS ☑ FLS ☑ ACS ☑ CG ☑
DATE: 02/15/2024

☐ 2022 CBC PRE-CHECK (PC) DOCUMENT
A SEPARATE PROJECT APPLICATION FOR CONSTRUCTION IS REQUIRED

MANUFACTURER PROFESSIONAL OF RECORD ON PC

LICENSED ARCHITECT
MARK PATRICK DEVANEY
No. C12631
Ren. 3-31-25
STATE OF CALIFORNIA

REGISTERED PROFESSIONAL ENGINEER
MARK D. ASH
No. S3380
STRUCTURAL
STATE OF CALIFORNIA
RST#22214

02-08-24
THESE DRAWINGS ARE PRELIMINARY AND NOT FOR CONSTRUCTION UNLESS STAMPED & SIGNED BY THE DESIGN PROFESSIONAL OF RECORD.

REVISIONS
1
2
3
4

DRAWN BY:	
SCALE:	AS NOTED
DATE:	MM/DD/YY
PROJECT NO:	XXXX-XX

SHEET TITLE:
RAMP DETAILS

SHEET NUMBER:
S10.1

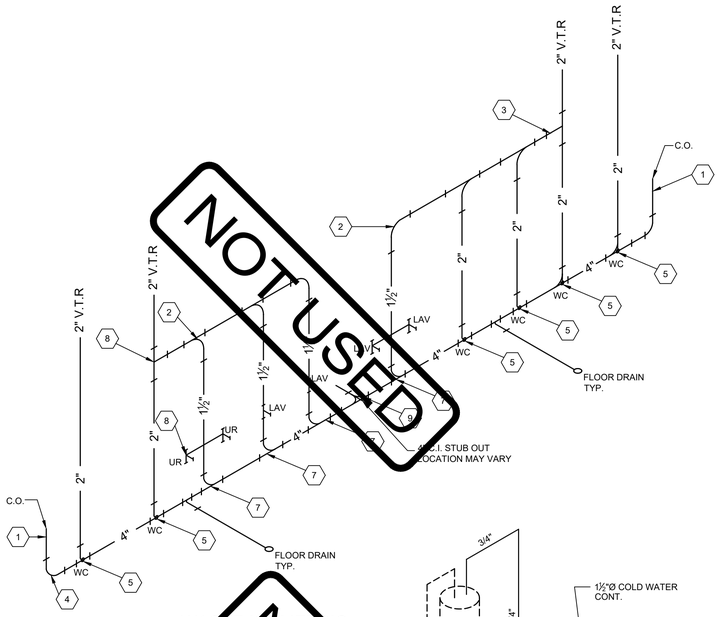

WASTE ISOMETRIC
SCALE : NTS RR OPTION #1

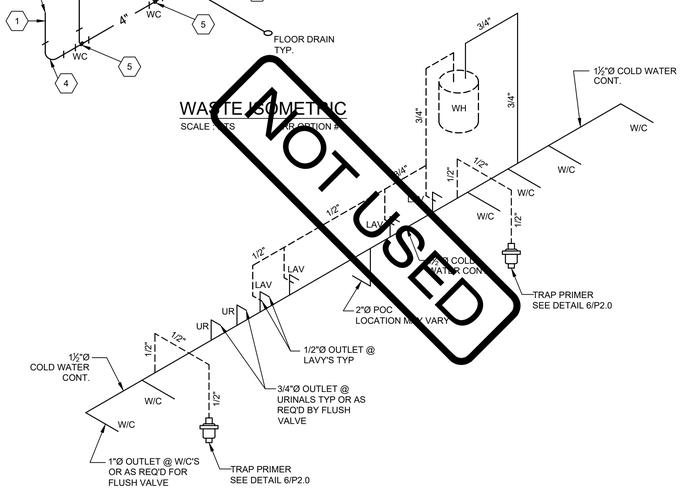

WATER SUPPLY ISOMETRIC
SCALE : NTS RR OPTION #1

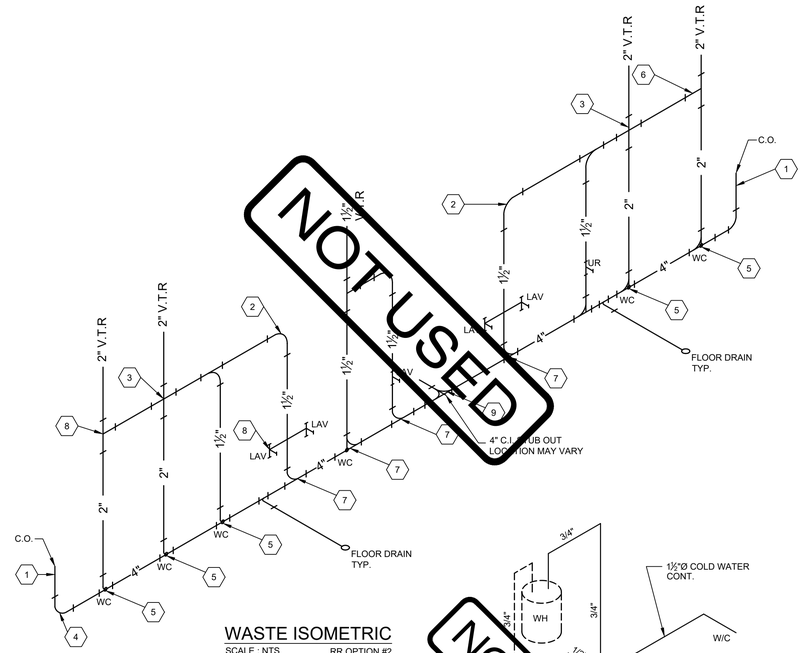

WASTE ISOMETRIC
SCALE : NTS RR OPTION #2

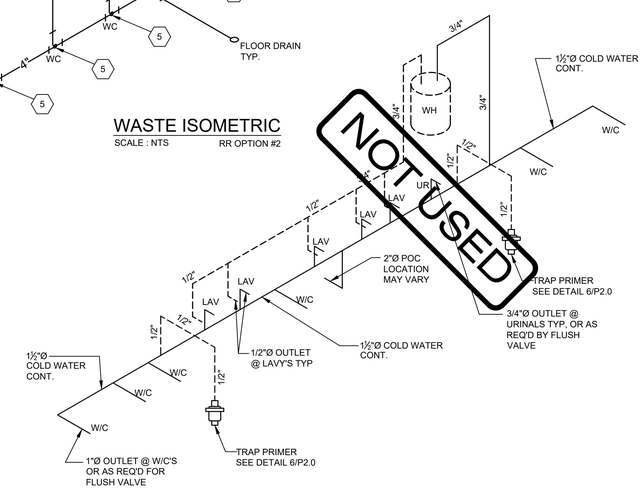

WATER SUPPLY ISOMETRIC
SCALE : NTS RR OPTION #2

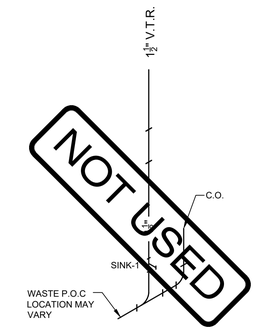

WASTE ISOMETRIC
SCALE : NTS CLASSROOM SINK OPTION

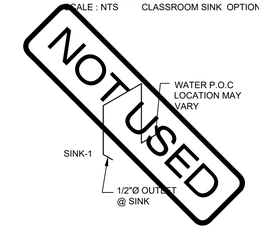

WATER SUPPLY ISOMETRIC
SCALE : NTS CLASSROOM SINK OPTION

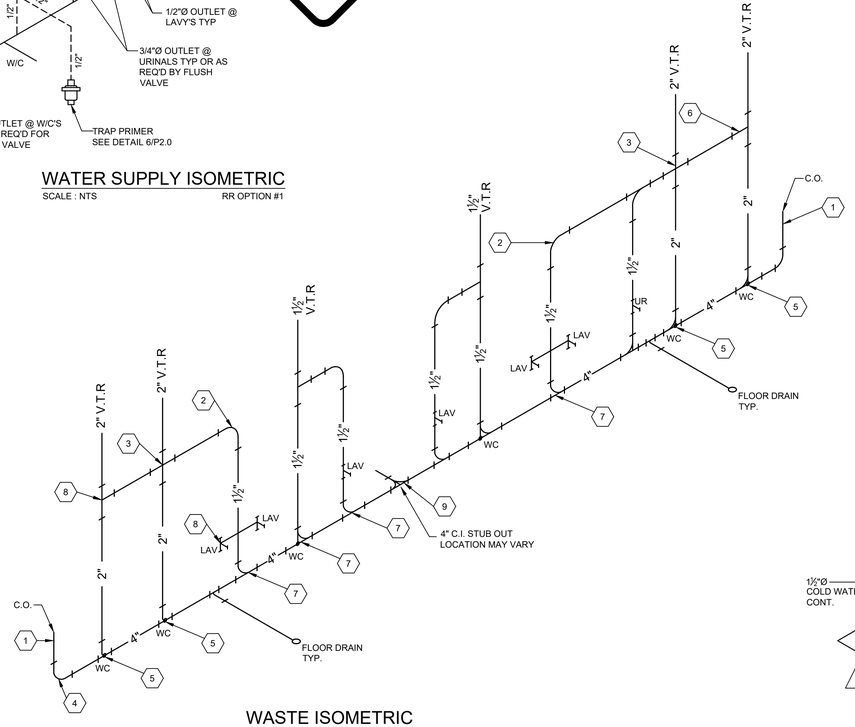

WASTE ISOMETRIC
SCALE : NTS RR OPTION #3

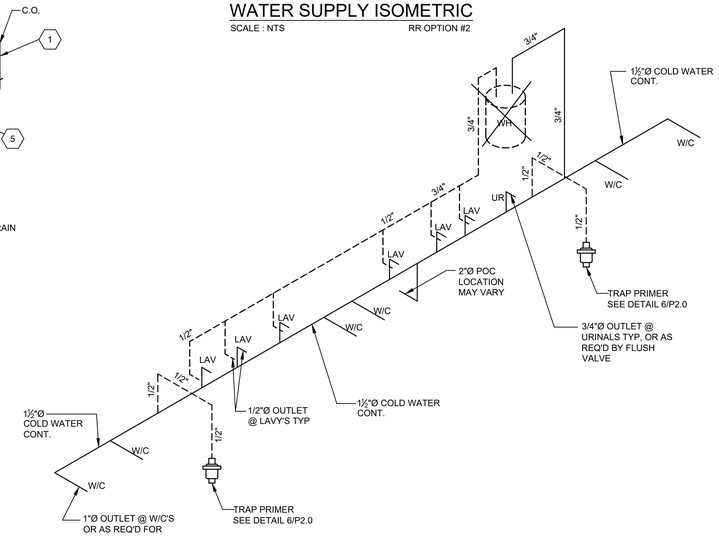

WATER SUPPLY ISOMETRIC
SCALE : NTS RR OPTION #3

KEY NOTES

1. 4" CLEAN OUT
2. VENT 90
3. VENT CROSS
4. 4" QUARTER BEND
5. SMITH #0600 CARRIER
6. 2" SANITARY TAP TEE
7. 4x4x2 COMBINATION WYE 1/8 BEND
8. 2x2x1-1/2 SANITARY TEE
9. 4" DOUBLE COMBINATION

IDENTIFICATION STAMP
DIV. OF THE STATE ARCHITECT
APP: 04-125522 INC:
REVIEWED FOR
SS ☑ FLS ☑ ACS ☑
DATE: 08/19/2026

AMS®
American Modular Systems
787 Spreckels Ave., Manteca, CA 95336
Phone (209) 825-1921 Fax (209) 825-7018
www.americanmodular.com

INTELLECTUAL-PROPERTY & PROPRIETARY RIGHTS STATEMENT
COPYRIGHT © AMERICAN MODULAR SYSTEMS (AMS)
AMS OWNS ALL COPYRIGHT AND OTHER INTELLECTUAL-PROPERTY AND PROPRIETARY RIGHTS IN THESE DRAWINGS, SPECIFICATIONS, AND THE MATERIAL CONTAINED HEREIN. CERTAIN ELEMENTS SHOWN IN THESE DOCUMENTS ARE REGISTERED TRADEMARKS OF AMS. ALL PATENTABLE MATERIALS CONTAINED IN THESE DOCUMENTS AND ORIGINATING WITH AMS WILL REMAIN THE SOLE PROPERTY OF AMS. THESE DRAWING, SPECIFICATIONS, AND THE MATERIAL CONTAINED HEREIN MAY NOT BE REPRODUCED, TRANSMITTED, COPIED, DISTRIBUTED, MODIFIED, OR OTHERWISE DISPOSED OF (DIRECTLY OR INDIRECTLY) AND MAY NOT BE USED (IN WHOLE OR IN PART) TO ASSIST IN THE CONSTRUCTION, DESIGN, OR OTHER MAKING OF, OR FOR THE PURPOSE OF FURNISHING ANY INFORMATION FOR THE CONSTRUCTION, DESIGN, OR OTHER MAKING OF, ANY BUILDINGS (MODULAR OR OTHERWISE), DRAWINGS, SPECIFICATIONS, PRINTS, APPARATUS, OR PARTS THEREOF, EXCEPT AS EXPRESSLY PERMITTED BY WRITTEN CONSENT OF, OR IN A WRITTEN AGREEMENT WITH, AMS. SUBMITTAL OR DISTRIBUTION TO MEET OFFICIAL REGULATORY REQUIREMENTS WILL NOT BE CONSTRUED AS PUBLICATION IN DEROGATION OF AMS'S COPYRIGHT OR OTHER INTELLECTUAL-PROPERTY OR PROPRIETARY RIGHTS.

PRE-CHECKED SET NAME
12' x 40' STANDARD MODULAR BUILDING

FORM®

SITE SPECIFIC PROJECT NAME

APPROVED
DIV. OF THE STATE ARCHITECT
APP: 04-122042 PC
REVIEWED FOR
SS ☑ FLS ☑ ACS ☑ CG ☑
DATE: 02/15/2024

☐ **2022 CBC PRE-CHECK (PC) DOCUMENT**
A SEPARATE PROJECT APPLICATION FOR CONSTRUCTION IS REQUIRED.

MANUFACTURER PROFESSIONAL OF RECORD ON PC

LICENSED ARCHITECT
ANTHONY PATRICK KNIGHT
No. C12631
Rem. 3-31-25
STATE OF CALIFORNIA

REGISTERED PROFESSIONAL ENGINEER
MANNY D FRISCH
No. S3380
STRUCTURAL
STATE OF CALIFORNIA

THESE DRAWINGS ARE PRELIMINARY AND NOT FOR CONSTRUCTION UNLESS STAMPED & SIGNED BY THE DESIGN PROFESSIONAL OF RECORD.

REVISIONS
1
2
3
4

DRAWN BY:	
SCALE:	AS NOTED
DATE:	MM/DD/YY
PROJECT NO:	XXXX-XX

SHEET TITLE:
PLUMBING
ISOMETRICS DRAWINGS

SHEET NUMBER:
P3.0

American Modular Systems

SERIAL NUMBERS
~~25-314-001~~
26-315-001

AMS-STOCKPILE
(2)24'x40' CLASSROOM

APPLICABLE CODES

PARTIAL LIST OF APPLICABLE CODES AS OF JANUARY 1, 2023

- 2022 CALIFORNIA ADMINISTRATIVE CODE (CAC) - PART 1, TITLE 24, CCR)
- 2022 CALIFORNIA BUILDING CODE (CBC), VOLUME 1 & 2 - (PART 2, TITLE 24 CCR) BASED ON THE 2021 INTERNATIONAL BUILDING CODE WITH 2022 CALIFORNIA AMENDMENTS
- 2022 CALIFORNIA ELECTRICAL CODE (CEC) - (PART 3, TITLE 24, CCR) BASED ON THE 2020 NATIONAL ELECTRIC CODE WITH 2022 CALIFORNIA AMENDMENTS
- 2022 CALIFORNIA MECHANICAL CODE (CMC) - (PART 4, TITLE 24, CCR) BASED ON THE 2021 IAPMO UNIFORM MECHANICAL CODE WITH 2022 CALIFORNIA AMENDMENTS
- 2022 CALIFORNIA PLUMBING CODE (CPC) - (PART 5, TITLE 24, CCR) BASED ON THE 2021 IAPMO UNIFORM PLUMBING CODE WITH 2022 CALIFORNIA AMENDMENTS
- 2022 CALIFORNIA ENERGY CODE (CEC) - (PART 6, TITLE 24, CCR)
- 2022 CALIFORNIA FIRE CODE (CFC) - (PART 9, TITLE 24, CCR) BASED ON THE 2021 INTERNATIONAL FIRE CODE WITH 2022 CALIFORNIA AMENDMENTS
- 2022 CALIFORNIA GREEN BUILDING CODE (CGC) - (PART 11, TITLE 24, CCR)
- 2022 CALIFORNIA REFERENCED STANDARDS CODE (PART 12, TITLE 24, CCR)
- ACCESSIBILITY TO MEET 2025 CBC

PARTIAL LIST OF APPLICABLE STANDARDS

NFPA 13	AUTOMATIC SPRINKLER SYSTEM	2022 EDITION
NFPA 14	STANDPIPE AND HOSE SYSTEMS	2019 EDITION
NFPA 17	DRY CHEMICAL EXTINGUISHING SYSTEMS	2021 EDITION
NFPA 17A	WET CHEMICAL EXTINGUISHING SYSTEMS	2021 EDITION
NFPA 20	STATIONARY PUMPS	2019 EDITION
NFPA 24	PRIVATE FIRE MAINS	2019 EDITION
NFPA 72	NATIONAL FIRE ALARM AND SIGNALING CODE (CALIFORNIA AMENDED) (NOTE: SEE UL, STANDARD 1971 FOR "VISUAL DEVICES")	2022 EDITION
NFPA 253	CRITICAL RADIANT FLUX OF FLOOR COVERING SYSTEMS	2019 EDITION
NFPA 2001	CLEAN AGENT FIRE EXTINGUISHING SYSTEMS (CA AMMENDED)	2018 EDITION

GENERAL NOTES

1. SUBSTITUTION OF PRODUCTS OR PROCESSES WHICH CHANGE THE STRUCTURAL SAFETY, FIRE & LIFE-SAFETY, OR ACCESSIBILTY OF THIS BUILDING SHALL BE SUBMITTED TO THE DSA AS AN ADDENDUM OR CONSTRUCTION CHANGE DOCUMENT.
2. PC BUILDING APPROVED ONLY FOR OCCUPANCY "E" OR "B".
3. PC BUILDING EXITING IS BASED ON THE USE OR OCCUPANCY AND WILL BE REVIEWED AS SITE SPECIFIC.
4. PC BUILDINGS LOCATED IN FIRE HAZARD SEVERITY ZONES PER WILDLAND URBAN INTERFACE FIRE AREAS (WUI) SHALL CONFORM TO CBC CHAPTER 7A.
5. AUTOMATIC FIRE SPRINKLER REQUIREMENTS ARE NOT INCLUDED IN THIS PC APPROVAL.
6. THIS PC PLAN SHALL NOT BE USED TO HOUSE "ROOMS OR AREAS WITH SPECIAL HAZARDS" SUCH AS LABORATORIES, VOCATIONAL SHOPS AND OTHER SUCH AREAS NOT CLASSIFIED AS GROUP H, LOCATED IN GROUP E OCCUPANCIES.
7. A SEPARATE DSA APPLICATION NUMBER IS REQUIRED FOR DESIGN & INSTALLATION OF SOLAR PANEL SYSTEMS, ITS ANCHORAGE & SUPPORT STRUCTURE. (NOTE: SOLAR PANEL SYSTEM WEIGHT IS INCLUDED IN BUILDING DESIGN) SOLAR SYSTEM SUBMITTALS SHALL NOT BE SUBMITTED AS AN OVER-THE-COUNTER SUBMITTAL.
8. IF THE STRUCTURE IS LOCATED IN AN AREA WITH LIQUEFIABLE SOIL OR SITE CLASS F, OVER-THE-COUNTER SUBMITTAL IS NOT ALLOWED AND REGULAR PROJECT SUBMITTAL IS REQUIRED. IF THE SITE IS NOT IN A MAPPED LIQUEFACTION HAZARD ZONE, IT MAY BE PRESUMED THAT NO LIQUEFACTION HAZARD EXISTS ON THAT SITE UNLESS A SITE-SPECIFIC GEOTECHNICAL REPORT IDENTIFIES SUCH HAZARD.
9. THIS PC BUILDING IS NOT DESIGNED FOR FLOOD HAZARD AREAS.
10. THE PLACEMENT OF THE PC BUILDING(S) ON OR ADJACENT TO SLOPES SHALL COMPLY WITH THE 'FOUNDATION CLEARANCES FROM SLOPES' SPECIFICATIONS FOUND ON SHEET N2.0 OF THESE DRAWINGS.
11. PC BUILDING SHALL NOT BE PLACED OR BE RELOCATED IN AREAS HAVING A NOISE CONTOUR GREATER THAN OR EQUAL TO 65 CNEL, OR IN AREAS EXPOSED TO A NOISE LEVEL OF 65 dB L_{eq}-1-hr DURING ANY HOUR OF OPERATION WHEN NOISE
12. CONTOURS ARE NOT READILY AVAILABLE, AS SPECIFIED IN CALGREEN CODE, SECTION 5.507.4.1 & 5.507.4.1.1.
13. THIS PC BUILDING IS NOT DESIGNED FOR SNOW LOADS.
14. THIS PC BUILDING IS NOT DESIGNED FOR ICE LOADS.
15. BUILDING SHALL BE MANUFACTURERD IN COMPLIANCE WITH CFC CHAPTER 33 FOR FIRE SAFETY DURING CONSTRUCTION.
16. SUBMITTAL AND APPROVAL OF A GEOHAZARD REPORT BY THE CALIFORNIA GEOLOGICAL SURVEY (CGS) IS NOT REQUIRED FOR SINGLE-STORY MODULAR BUILDINGS PROVIDED THAT THEY DO NOT EXCEED 4,000 SUQARE FEET IN PLAN AREA AND ARE NOT LOCATED WITHIN STATE OR LOCAL GEOLOGICAL HAZARD ZONES IN ACCORDANCE WITH IR A-4, SECTION 3.2.1.
17. THE DESIGN PROFESSIONAL HAS EXEMPTED RAMPS FROM SPECIAL INSPECTION REQUIREMENTS FOR MATERIAL IDENTIFICATION AND STRUCTURAL WELDING. RAMP SHALL NOT BE MODIFIED NOR HAVE SHIMS ADDED CAUSING THE DISTANCE BETWEEN THE HIGHEST RAMP WALKING SURFACE AND THE ADJACENT GRADE TO BE MORE THAN 30 INCHES. IF THIS CONDITION IS NOT MET, STRUCTURAL TESTING AND/OR INSPECTION WILL BE REQUIRED TO VERIFY MATERIALS AND STRUCTURAL WELDING. THIS APPLIES TO SCOPES OF WORK INCLUDING NEW CONSTRUCTION, ALTERATION, OR RELOCATION OF THE RAMP.
18. ACCEPTANCE TESTS BE COMPLETED ON NEWLY INSTALLED OR REPLACEMENT OF LIGHTING CONTROLS, MECHANICAL SYSTEMS, FENESTRATION, AND PROCESS EQUIPMENT BEFORE PROJECT COMPLETION PER THE CALIFORNIA ENERGY CODE SECTION 10-103. ACCEPTANCE TESTS MUST BE PERFORMED BY A CERTIFIED ACCEPTANCE TEST TECHNICIAN (ATT). THE ACCEPTANCE TESTING PROCEDURES MUST BE REPEATED, AND DEFICIENCIES CORRECTED UNTIL THE INSTALLATION OF THE SPECIFIED SYSTEMS CONFORM AND PASS THE REQUIRED ACCEPTANCE CRITERIA. COMPLETED NRCA FORMS SHALL BE SUBMITTED TO THE PROJECT INSPECTOR AND THE DISTRICT.

© 2023 BY AMERICAN MODULAR SYSTEMS, INC.

ALL OF THE DRAWINGS AND DETAILS CONTAINED IN THIS PACKAGE ARE THE INTELLECTUAL PROPERTY OF AMERICAN MODULAR SYSTEMS, INC (AMS) AND MAY NOT BE USED FOR CONSTRUCTION OR DESIGN BY ANOTHER ENTITY WITHOUT THE EXPRESS WRITTEN PERMISSION OF AMS.

COPYRIGHT: © 2023 BY AMERICAN MODULAR SYSTEMS, INC. ALL RIGHTS RESERVED. NO PART OF THIS DOCUMENT MAY BE REPRODUCED OR TRANSMITTED IN ANY FORM OR BY ANY MEANS, ELECTRONIC, MECHANICAL, PHOTOCOPYING, RECORDING, OR OTHERWISE, WITHOUT THE PRIOR WRITTEN PERMISSION OF AMERICAN MODULAR SYSTEMS, INC. CERTAIN ELEMENTS CONTAINED IN THESE DOCUMENTS ARE REGISTERED TRADEMARKS. ALL PATENTABLE MATERIALS CONTAINED IN THESE DOCUMENTS AND ORIGINATING WITH AMERICAN MODULAR SYSTEMS, INC. SHALL REMAIN THE SOLE PROPERTY OF AMERICAN MODULAR SYSTEMS, INC. SUBMITTAL OR DISTRIBUTION TO MEET OFFICIAL REGULATORY REQUIREMENTS WILL NOT BE CONSTRUED AS PUBLICATION IN DEROGATION OF AMERICAN MODULAR SYSTEM, INC.'S COPYRIGHT OR OTHER RESERVED INTELLECTUAL PROPERTY RIGHTS AND INTERESTS.

BUILDING DATA

OCCUPANCY	~~E OR B (CLASSROOM USE FOR COLLEGE), OR A (CATEGORY I/II)~~
TYPE OF CONSTRUCTION	V-B
WIND LOAD ASCE 7-16 SECTION 28.5.3 SIMPLIFIED PROCEDURE	V = 99 MPH BASIC WIND SPEED EXPOSURE = C INTERNAL PRESSURE COEFF., $GC_{P,I}$ = ±0.18 RISK CATEGORY II K_{ZT} = 1.00 λ = 1.21 ROOF ANGLE = 1.2°
ICE LOAD	NOT CONSIDERED (SEE GENERAL NOTE #15 THIS SHEET)
SNOW LOAD	NOT CONSIDERED (SEE GENERAL NOTE #14 THIS SHEET)
ROOF LIVE LOAD (MAX PSF)	20
FLOOR LIVE LOAD (PSF)	☐ 50 ☒ 50+15 ☐ 100
RAMP LIVE LOAD (MAX. PSF)	100 (1,000# CONCENTRATED LD)
DESIGN DEAD LOADS (MAX PSF)	18.0 ROOF - 12.0 FLOOR - 10.0 EXT. WALLS
ROOF SOLAR PANELS	3.0 PSF INCLUDED IN ROOF DESIGN DEAD LOADS ABOVE (SEE GENERAL NOTE #7 THIS SHEET)
FIRE SPRINKLER SYSTEM DESIGN WT.	NOT CONSIDERED (SEE GENERAL NOTES #5 THIS SHEET)
ALLOWABLE SOIL PRESSURE (PSF)	1,000 FOR WOOD FOUNDATION
FLOOD HAZARD AREA	NO (SEE GENERAL NOTE #11 THIS SHEET)
RAIN INTENSITY (IN/HR)	3"
BUILDING AREA (SQ. FT.)	960 SF
CLIMATE ZONE GROUP	☐ A (1,16) ☐ B (2-5) ☒ C (6-13) ☐ D (14,15) (REFER TO EN.1 FOR REQUIREMENTS)
MODULES	LIGHT MODULAR STEEL MOMENT FRAMES PER CBC 2212A
SYSTEM	12'x40' MODULES (2 MODULES MINIMUM - 4 MODULES MAX)
FOUNDATION TYPE	WOOD

SITE-SPECIFIC OPTIONS

FLOOR DECK	1⅛" PLYWOOD SHTG.			
WALL STUDS	WOOD			
EXTERIOR WALL FINISH	☒ DURATEMP 303	☐ LAP SIDING		
HVAC	☐ INTERIOR FLOOR MOUNTED	☒ EXTERIOR WALL MOUNTED		
ROOFING	3" x 20 GA. STANDING SEAM			
ROOF PITCH	☒ SINGLE PITCH	☐ DUAL PITCH		
ROOF DIAPHRAGM	STEEL X-BRACING			
FRONT OVERHANG	☐ NO	☒ YES - LENGTH: 5'-0"		
REAR OVERHANG	☐ NO	☒ YES - LENGTH: 2'-9"		
RAMP(S)	☐ NO	☒ YES (SEE SHEET S10.0)		
LIQUEFIABLE SOILS	☒ NO	☐ YES (SEE GENERAL NOTE #10 THIS SHEET)		
MAPPED GEOHAZARD ZONE	☒ NO	☐ YES (AS DEFINED BY PC-6 SECTION 1.8)		
GEOHAZARD REPORT	☒ NO	☐ YES		
IF YES	GEOTECHNICAL FIRM:			
	REPORT #:		REPORT DATE:	
GEOTECHNICAL REPORT	☒ NO	☐ YES		
IF YES	GEOTECHNICAL FIRM:			
	REPORT #:		REPORT DATE:	

☐ THIS SHEET CONTAINS DESIGN OPTION BOXES AVAILABLE FOR SELECTION BASED ON SITE SPECIFIC REQUIREMENTS.

REQUIRED PV SYSTEM SIZE (kW)

CLIMATE ZONE GROUP	BUILDING SIZE		
	24'x40'	36'x40'	48'x40'
	APPROXIMATE CONDITIONED FLOOR AREA		
	960	1440	1920
☐ 1 & 16	NONE	NONE	NONE
☐ 2 - 5	NONE	NONE	NONE
☒ 6 - 13	NONE	NONE	NONE
☐ 14 & 15	NONE	NONE	2.0

SEE SHEET TS2 FOR SHEET INDEX

SITE SPECIFIC WIND VALUES

SITE SPECIFIC BASIC WIND SPEED = 96 MPH WIND EXPOSURE = C

SITE SPECIFIC SEISMIC VALUES

SITE SPECIFIC S_S = 0.755 SITE SPECIFIC S_1 = 0.278 SITE CLASS = D- DEFAULT

SITE SPECIFIC S_{DS} = 0.604 SITE SPECIFIC S_{D1} = N/A

NOTE: SITE SHALL BE SITE CLASS "D" (DEFAULT) IF NO SOILS REPORT

PC BUILDING SEISMIC DESIGN CRITERIA

I_e = 1.0 T = 0.231s R = 3.5 (OMF) RISK CATEGORY II
Ω_O = 3.0 C_d = 3.0 ρ = 1.0 SEISMIC DESIGN CATEGORY: D (S_1 < 0.75) E (S_1 ≥ 0.75)

MAXIMUM STORY DRIFT RATIO = 2.0% (I.E. MAX DRIFT = 0.020 x THE HEIGHT UNDER CONSIDERATION.
LATERAL FORCE RESISTING SYSTEM: LIGHT MODULAR STEEL MOMENT FRAMES PER 2212A
ANALYSIS PROCEDURE: EQUIVALENT LATERAL FORCE
SEISMIC RESPONSE COEFFICIENT IS BASED ON SHORT PERIOD RESPONSE Sds

NOTE:
PER CBC 1613A.2.3, S_{DS} (S_{M3}) SHALL NOT BE TAKEN AS LESS THAN S_{D1} (S_{M1})

NOTE:
FOR ALL LATERAL LOAD CASES, COMPONENTS AND CLADDING DESIGNED FOR:
S_{DS} = 1.95

☒ NO SOILS REPORT - ASSUMED SITE CLASS "D" DEFAULT

S_S = 2.440 MAX (SITE)
1.708 (DESIGN)* F_a = 1.2 S_{DS} = 1.95 (SITE)
1.37 (DESIGN)*

S_1 = 1.213 MAX (SITE & DESIGN) F_V = 1.7 S_{D1} = 1.37 MAX (SITE & DESIGN) C_S = 0.393 W (DESIGN)*

☐ WITH SOILS REPORT - SITE CLASS "A", "B" OR "D"

NOTE: GROUND MOTION HAZARD ANALYSIS IS NOT REQUIRED WHERE THE VALUE OF THE PARAMETERS S_{M1} IS INCREASED BY 50% FOR ALL APPLICATIONS OF S_{M1} (ASCE 7-16 w/SUPPLEMENT #3, SECTION 11.4.8, EXCEPTION1)

S_S = 2.932 MAX (SITE)
2.050 (DESIGN)* F_a = 1.0 S_{DS} = 1.95 MAX (SITE)
1.37 (DESIGN)*

S_1 = 1.213 MAX (SITE & DESIGN) F_V = 1.7 S_{D1} = 1.37 MAX (SITE & DESIGN) C_S = 0.393 W (DESIGN)*

☐ WITH SOILS REPORT - SITE CLASS "C"

S_S = 2.440 MAX (SITE)
1.708 (DESIGN)* F_a = 1.2 S_{DS} = 1.95 (SITE)
1.37 (DESIGN)*

S_1 = 1.473 MAX (SITE & DESIGN) F_V = 1.4 S_{D1} = 1.37 MAX (SITE & DESIGN) C_S = 0.393 W (DESIGN)*

☐ WITH SOILS REPORT - SITE CLASS "E"

NOTE: GROUND MOTION HAZARD ANALYSIS IS NOT REQUIRED WHERE THE EQUIVALENT LATERAL FORCE PROCEDURE IS USED FOR DESIGN AND THE VALUE OF C_S IS DETERMINED BY EQ (12.8-2) FOR ALL VALUES OF *T* (ASCE 7-16 w/SUPPLEMENT #3, SECTION 11.4.8, EXCEPTION 2)

S_S = 1.718 MAX (SITE)
1.718 (DESIGN) F_a = 1.2 S_{DS} = 1.37 (SITE)
1.37 (DESIGN)

S_1 = 1.031 MAX (SITE & DESIGN) F_V = 2.0 S_{D1} = 1.37 MAX (SITE & DESIGN) C_S = 0.393 W (DESIGN)

*PER ASCE 7-16, SECTION 12.8.1.3:
THE VALUE OF C_S AND E_V ARE PERMITTED TO BE CALCULATED USING A VALUE OF S_{DS} EQUAL TO 1.0, BUT NOT LESS THAN 70% OF S_{DS} AS DEFINED IN SECTION 11.4.5, PROVIDED THAT ALL OF THE FOLLOWING CRITERIA ARE MET:
1. STRUCTURE DOES NOT HAVE IRREGULARITIES;
2. STRUCTURE DOES NOT EXCEED FIVE (5) STORIES ABOVE THE LOWER OF THE BASE OR GRADE PLANE;
3. STRUCTURE HAS A FUNDAMENTAL PERIOD, T, THAT DOES NOT EXCEED 0.5 SECONDS;
4. STRUCTURE MEETS REQUIREMENTS FOR REDUNDANCY FACTOR, *ρ*, TO BE TAKEN AS 1.0;
5. SITE SOIL PROPERTIES ARE NOT CLASSIFIED AS SITE CLASS 'E' OR 'F';
6. STRUCTURE IS CLASSIFIED AS RISK CATEGORY II.

HVAC SCHEDULE

BUILDING SIZE & CLIMATE ZONE GROUP (ZONE)	# OF HVAC			
	3½ TON (BARD)	4 TON (BARD)	4 TON (SYSTEM AIR)	5 TON (SYTEM AIR)
☐ ~~24'x40' GROUP A (1,16)~~	1			
☐ ~~24'x40' GROUP B (2-5)~~	1			
☒ 24'x40' GROUP C (6-13)	1			
☐ ~~24'x40' GROUP D (14,15)~~		1		
☐ ~~36'x40' GROUP A (1,16)~~	1			
☐ ~~36'x40' GROUP B (2-5)~~	1			
☐ ~~36'x40' GROUP C (6-13)~~			1	
☐ ~~36'x40' GROUP D (14,15)~~				1
☐ ~~48'x40' GROUP A (1,16)~~	2			
☐ ~~48'x40' GROUP B (2-5)~~	2			
☐ ~~48'x40' GROUP C (6-13)~~	2			
☐ ~~48'x40' GROUP D (14,15)~~		2		

IDENTIFICATION STAMP
DIV. OF THE STATE ARCHITECT
APP: 04-125522 INC:
REVIEWED FOR
SS ☑ FLS ☑ ACS ☑
DATE: 08/19/2026

American Modular Systems
787 Spreckels Ave., Manteca, CA 95336
Phone (209) 825-1921 Fax (209) 825-7018
www.americanmodular.com

INTELLECTUAL-PROPERTY & PROPRIETARY RIGHTS STATEMENT
COPYRIGHT © AMERICAN MODULAR SYSTEMS (AMS)
AMS OWNS ALL COPYRIGHT AND OTHER INTELLECTUAL-PROPERTY AND PROPRIETARY RIGHTS IN THESE DRAWINGS, SPECIFICATIONS, AND THE MATERIAL CONTAINED HEREIN. CERTAIN ELEMENTS SHOWN IN THESE DOCUMENTS ARE REGISTERED TRADEMARKS OF AMS. ALL PATENTABLE MATERIALS CONTAINED IN THESE DOCUMENTS AND ORIGINATING WITH AMS WILL REMAIN THE SOLE PROPERTY OF AMS. THESE DRAWING, SPECIFICATIONS AND THE MATERIAL CONTAINED HEREIN MAY NOT BE REPRODUCED, TRANSMITTED, COPIED, DISTRIBUTED, MODIFIED, OR OTHERWISE DISPOSED OF (DIRECTLY OR INDIRECTLY) AND MAY NOT BE USED (IN WHOLE OR IN PART) TO ASSIST IN THE CONSTRUCTION, DESIGN, OR OTHER MAKING OF, OR FOR THE PURPOSE OF FURNISHING ANY INFORMATION FOR THE CONSTRUCTION, DESIGN, OR OTHER MAKING OF, ANY BUILDINGS (MODULAR OR OTHERWISE), DRAWINGS, SPECIFICATIONS, PRINTS, APPARATUS, OR PARTS THEREOF, EXCEPT AS EXPRESSLY PERMITTED BY WRITTEN CONSENT OF, OR IN A WRITTEN AGREEMENT WITH, AMS. SUBMITTAL OR DISTRIBUTION TO MEET OFFICIAL REGULATORY REQUIREMENTS WILL NOT BE CONSTRUED AS PUBLICATION IN DEROGATION OF AMS'S COPYRIGHT OR OTHER INTELLECTUAL-PROPERTY OR PROPRIETARY RIGHTS.

PRE-CHECKED SET NAME
24' x 40' THRU 48' x 40'
(LOW SEISMIC)
2GO®

SITE SPECIFIC PROJECT NAME
AMS STOCKPILE
(2) 24'-X40' BUILDING

MANUFACTURER PROFESSIONAL OF RECORD
LICENSED ARCHITECT
ANDREW PATRICK DONAHUE
No. C12631
Ren. 3-31-27
STATE OF CALIFORNIA

THESE DRAWINGS ARE PRELIMINARY AND NOT FOR CONSTRUCTION UNLESS STAMPED & SIGNED BY THE DESIGN PROFESSIONAL OF RECORD.

REVISIONS
1
2
3
4

DRAWN BY:	RA
SCALE:	AS NOTED
DATE:	14/04/2026
PROJECT NO:	2020-26

SHEET TITLE:
TITLE SHEET

SHEET NUMBER:
TS-M

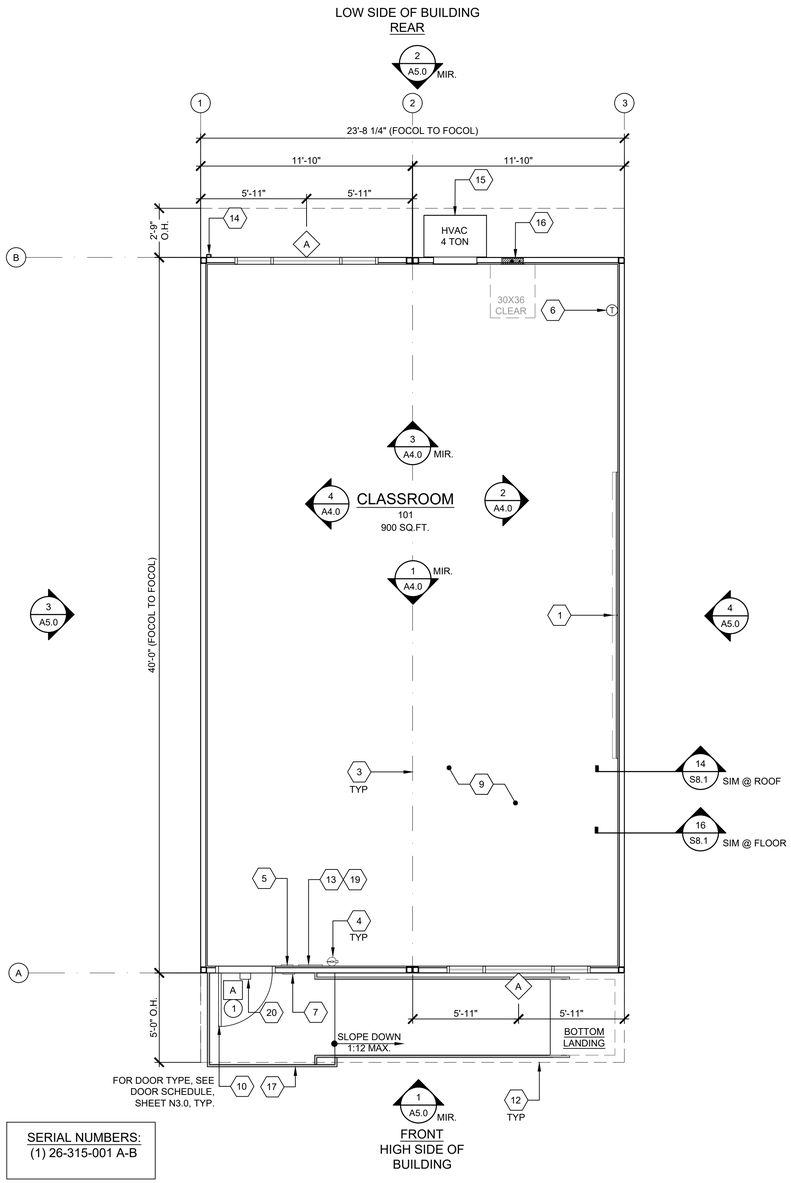

SERIAL NUMBERS:
(1) 26-315-001 A-B

FLOOR PLAN- (2) 24X40 LEFT HAND CONFIGURATION

SCALE: 1/4" = 1'-0" 1

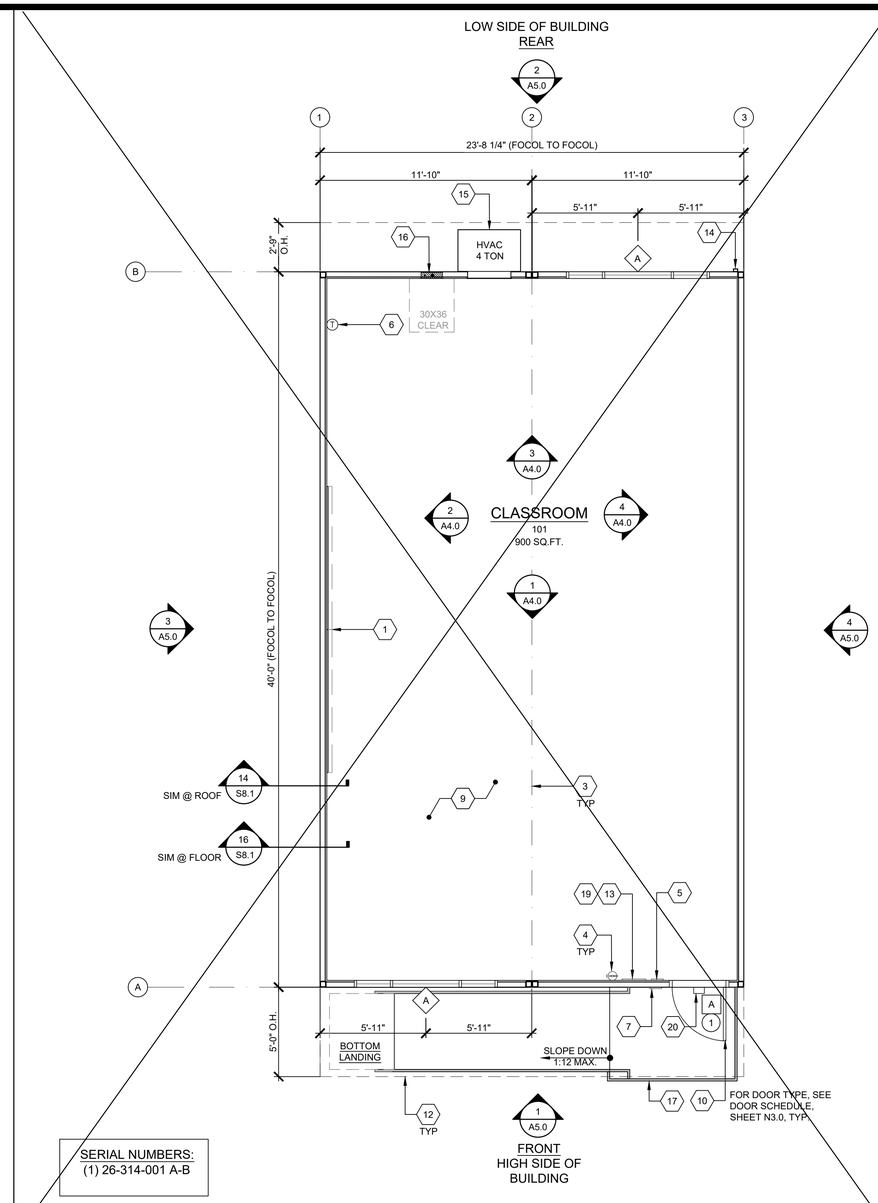

SERIAL NUMBERS:
(1) 26-314-001 A-B

FLOOR PLAN- (1) 24X40 RIGHT HAND CONFIGURATION

SCALE: 1/4" = 1'-0" 1A

1. (2) 8'X4' MARKER BOARDS - SEE SHEET A4.0
2. NOT USED
3. TYP. MOD LINE
4. FIRE EXTINGUISHER - TOP OF HANDLE @ +46" A.F.F.
   4" MAX PROTRUSION FROM WALL IF BOTTOM OF FIRE EXTINGUISHER IS ABOVE 27" A.F.F.
5. TACTILE EXIT SIGN PER DETAIL 10/N4.0 (BY OTHERS)
6. THERMOSTAT - TOP @ 46" A.F.F. - SEE ELECTRICAL SHEETS
7. ROOM SIGNAGE AND I.S.A. PER DETAILS 5&9/N4.0(BY OTHERS)
8. NOT USED
9. FLOORING (BY OTHERS)
10. EGRESS DOOR
11. NOT USED
12. OVERHANG
13. OCCUPANT LOAD SIGN PER DETAIL 11/N4.0 (BY OTHERS)
14. DOWNSPOUT - DISCHARGE TO SPLASH BLOCK (U.O.N.)
    (QUANTITY AND LOCATION MAY VARY)
15. HVAC - SEE MECHANICAL
16. ELECTRICAL PANEL (LOCATION MAY VARY)
17. TYPICAL RAMP - REFER TO DETAIL 2/-.
18. NOT USED
19. ASSISTIVE LISTENING (AL) SIGN POSTED IN PROMINENT PLACE AT OR NEAR THE ENTRANCE PER 17/N4.0-A.
20. EXTERIOR LIGHT-SEE ELECTRICAL

KEY NOTES

1. ~~REFER TO SHEETS N5.0 FOR POSSIBLE ADDITIONAL FLOOR PLAN CONFIGURATIONS.~~
2. ~~OPTIONAL INTERIOR WALLS MAY OCCUR THROUGHOUT THE BUILDING AS CONSTRUCTED PER SHEET S8.1. THE PC TITLE 24 HAS BEEN RUN FOR THE WORST CASE ENVELOPE BASED ON AREA.~~
3. ~~PANIC HARDWARE COMPLYING WITH C.B.C. 1010.2.9 IS REQUIRED TO BE INSTALLED WHEN THE CONFIGURATION OF ANY ROOM PROVIDES AN OCCUPANT LOAD OF 50 OR GREATER.~~
4. ~~IF OCCUPANCY LOAD EXCEEDS 50, PROVIDE A SECOND EXIT DOOR, PER CBC TABLE 1006.2.1.~~
5. FOR ROOMS OR SPACES CLASSIFIED AS AN ASSEMBLY OCCUPANCY, PROVIDE AN OCCUPANT LOAD SIGN (BY OTHERS) IN A CONSPICUOUS PLACE, NEAR THE MAIN EXIT, PER C.B.C. SECTION 1004.9.
6. ALL PRIMARY EXTERIOR DOOR ENTRIES SHALL BE COVERED TO PREVENT WATER INTRUSION BY USING NONABSORBENT FLOOR AND WALL FINISHES WITHIN AT LEAST 2 FEET AROUND AND PERPENDICULAR TO OPENING, PER CALGREEN, SECTION 5.407.2.2.1.
7. PRIMARY EXTERIOR DOOR ENTRIES SHALL HAVE AT LEAST ONE OF THE FOLLOWING:
   - INSTALLED AWNING AT LEAST 4 FEET IN DEPTH (BY OTHERS).
   - ROOF OVERHANG AT LEAST 4 FEET IN DEPTH.
   - DOOR RECESSED AT LEAST 4 FEET.
   - OTHER METHODS WHICH PROVIDE EQUIVALENT PROTECTION (BY OTHERS).
8. WINDOW PLACEMENT & SIZE MAY VARY AS THE PC TITLE 24 HAS BEEN RUN FOR THE WORST CASE ENVELOPE PROVIDED THAT THE MAXIMUM WINDOW AREA IS 240 SQ. FT. FOR A DOUBLE-WIDE ROOM AND 168 SQ. FT. FOR A TRIPLE WIDE ROOM. JUSTIFICATION OF LARGER AREAS MAY BE BASED ON RATIO AND INTERPOLATION.
9. ~~IF FIRE RATED WALLS ARE REQUIRED DUE TO SITE SPECIFIC REQUIREMENTS, REFER TO DETAILS IN SHEET A8.0 FOR 1-HR RATED DETAILS~~

SITE NOTE

3/16:12 (1%) MINIMUM TO 1/4:12 (2%) MAXIMUM GRADE FROM FACE OF BUILDING MUST BE ADHERED TO FOR WATER RUN-OFF. PONDING MAY OCCUR AROUND THE PERIMETER OF THE BUILDING.

SHEET NOTES

- (X) = KEY NOTE - SEE KEY NOTES ABOVE
- (X) = DOOR TYPE - SEE SCHEDULE, SHEET N3.0
- [X] = DOOR HARDWARE - SEE HARDWARE SCHEDULE, SHEET N3.0
- <X> = WINDOW TYPE - SEE SCHEDULE, SHEET N3.0

SYMBOLS LEGEND

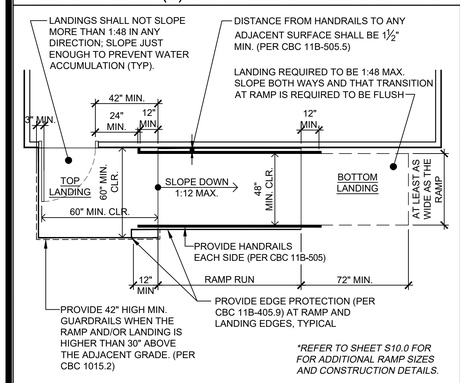

**REFER TO SHEET S10.0 FOR FOR ADDITIONAL RAMP SIZES AND CONSTRUCTION DETAILS.*

☒ RAMP PLAN

SCALE: 1/4" = 1'-0" 2

(NO HATCH) 2X4 WALLS

WALL LEGEND

BUILDING SIZE SCHEDULE			
BUILDING SIZE (FT)	TOTAL # OF 12'-0" WIDE MODULES	TOTAL # OF CENTER MODULES	TOTAL FNDN WIDTH
☒ 24'x40'	2	0	23'-8½"
☐ 36'x40'	3	1	35'-6¾"
☐ 48'x40'	4	2	47'-5"

BUILDING SCHEDULE

3

ENERGY CONTROLS

1. DEMAND RESPONSE CONTROLS:
   ONLY REQUIRED IN BUILDINGS LARGER THAN 10,000 S.F., THEREFORE, NOT REQUIRED FOR THIS PC.
2. AUTOMATIC DAYLIGHTING CONTROLS:
   NOT REQUIRED IN ROOMS WHERE COMBINED INSTALLED LIGHTING POWER IN COMBINED SKYLIT & PRIMARY DAYLIT ZONES ARE <120 WATTS. INSTALLED WATTAGE IN PRIMARY SIDELIT DAY LIT ZONE IS 90 WATTS (2x 45w, AS SHOWN ON SHEET E1.0). THEREFORE, AUTOMATIC DAYLIGHTING CONTROLS ARE NOT REQUIRED.
3. ENERGY MANAGEMENT CONTROL SYSTEM (EMCS) CONNECTION:
   PER TITLE 24 CODE, "AN EMCS MAY BE INSTALLED TO COMPLY WITH THE REQUIREMENTS OF ONE OR MORE LIGHTING CONTROLS IF IT MEETS THE MINIMUM REQUIREMENTS". PC MAY CONTAIN OCCUPANCY SENSORS AND PHOTOCELL CONTROL LIGHTING, IN THAT CASE, AN EMCS IS NOT REQUIRED FOR THIS PC.
4. SOLAR-READY ZONE REQUIREMENTS:
   REQUIREMENTS & TABLE CAN BE FOUND ON SHEET A2.0

NOTE:
ANY MONITORING EQUIPMENT OR ASSOCIATED SENSORS ARE SITE SPECIFIC AND ARE NOT INCLUDED IN THE BASE PC.

ENERGY NOTES

ACOUSTIC CONTROLS

1. WHEN THE PRE-CHECK (PC) BUILDING IS SITE ADAPTED, THE BUILDING AND SITE FEATURES SHALL COMPLY WITH THE CALGREEN CODE, SECTION 5.507.4, FOR THE SPECIFIC SITE LOCATION.
2. MINIMUM WALL ASSEMBLIES:
   WALL ASSEMBLIES SHALL BE CONSTRUCTED PER DETAIL SHEETS A5.1, A5.3, & A8.0, WITH EITHER 2x4 WOOD STUDS.
   MINIMUM STC RATINGS LISTED BELOW ARE PER THE CATALOG OF STC & IIC RATINGS FOR WALL AND FLOOR/CEILING ASSEMBLIES, PRODUCED BY THE OFFICE OF NOISE CONTROL, CA DEPARTMENT OF HEALTH SERVICES.

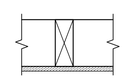

(1) LAYER 1/2" GYPSUM BOARD
SECURED TO MIN. 2x4 STUDS @ 16"
O.C. MAX.

STC=28
(CATALOG SECTION 1.2.1.5.4.1)
TEST REF.: NATIONAL RESEARCH
COUNCIL OF CANADA - NRC #66

3. IN THE EVENT THAT A PC CLASSROOM IS DESIGNED TO CONNECT TO ANOTHER PC CLASSROOM OR RESTROOM, INTERIOR SOUND TRANSMISSION IN THE INTERIOR ADJOINING WALL AND FLOOR/CEILING SHALL MEET THE MINIMUM REQUIREMENT OF A STC OF 40, PER CALGREEN CODE SECTION 507.4.3. (EXAMPLES OF QUALIFYING ASSEMBLIES SHOWN BELOW).

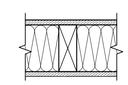

(2) LAYER 5/8" GYPSUM BOARD
SECURED TO MIN. 2x4 STUDS @ 24"
O.C. MAX. w/ 3½" THK. BATT
INSULATION

STC=40
TEST REF.: AUDIO ALLOY L.L.C TEST
NUMBER: OL-05-1003

4. MINIMUM WINDOW & DOOR RATINGS:
   ALL WINDOWS AND DOORS SPECIFIED ON THE SCHEDULES FOUND ON SHEET N3.0 OF THIS PACKAGE SHALL MEET A MINIMUM STC RATING OF 27.

ACOUSTIC NOTES

IDENTIFICATION STAMP
DIV. OF THE STATE ARCHITECT
APP: 04-125522 INC:
REVIEWED FOR
SS ☑ FLS ☑ ACS ☑
DATE: 08/19/2026

American Modular Systems
787 Spreckels Ave., Manteca, CA 95336
Phone (209) 825-1921 Fax (209) 825-7018
www.americanmodular.com

INTELLECTUAL-PROPERTY & PROPRIETARY RIGHTS STATEMENT
COPYRIGHT © AMERICAN MODULAR SYSTEMS (AMS)
AMS OWNS ALL COPYRIGHT AND OTHER INTELLECTUAL-PROPERTY AND PROPRIETARY RIGHTS IN THESE DRAWINGS, SPECIFICATIONS, AND THE MATERIAL CONTAINED HEREIN. CERTAIN ELEMENTS SHOWN IN THESE DOCUMENTS ARE REGISTERED TRADEMARKS OF AMS. ALL PATENTABLE MATERIALS CONTAINED IN THESE DOCUMENTS AND ORIGINATING WITH AMS WILL REMAIN THE SOLE PROPERTY OF AMS. THESE DRAWING, SPECIFICATIONS, AND THE MATERIAL CONTAINED HEREIN MAY NOT BE REPRODUCED, TRANSMITTED, COPIED, DISTRIBUTED, MODIFIED, OR OTHERWISE DISPOSED OF (DIRECTLY OR INDIRECTLY) AND MAY NOT BE USED (IN WHOLE OR IN PART) TO ASSIST IN THE CONSTRUCTION, DESIGN, OR OTHER MAKING OF, OR FOR THE PURPOSE OF FURNISHING ANY INFORMATION FOR THE CONSTRUCTION, DESIGN, OR OTHER MAKING OF, ANY BUILDINGS (MODULAR OR OTHERWISE), DRAWINGS, SPECIFICATIONS, PRINTS, APPARATUS, OR PARTS THEREOF, EXCEPT AS EXPRESSLY PERMITTED BY WRITTEN CONSENT OF, OR IN A WRITTEN AGREEMENT WITH, AMS. SUBMITTAL OR DISTRIBUTION TO MEET OFFICIAL REGULATORY REQUIREMENTS WILL NOT BE CONSTRUED AS PUBLICATION IN DEROGATION OF AMS'S COPYRIGHT OR OTHER INTELLECTUAL-PROPERTY OR PROPRIETARY RIGHTS.

PRE-CHECKED SET NAME

24' x 40' THRU 48' x 40'
(LOW SEISMIC)

2GO®

SITE SPECIFIC PROJECT NAME

AMS STOCKPILE
(2) 24'-X40' BUILDING

MANUFACTURER PROFESSIONAL OF RECORD

LICENSED ARCHITECT
PATRICK CONNOR HIGHT
No. C12631
Ren. 3-31-27
STATE OF CALIFORNIA

THESE DRAWINGS ARE PRELIMINARY AND NOT FOR CONSTRUCTION UNLESS STAMPED & SIGNED BY THE DESIGN PROFESSIONAL OF RECORD.

REVISIONS
1
2
3
4

DRAWN BY:	RA
SCALE:	AS NOTED
DATE:	14/04/2026
PROJECT NO:	2020-26

SHEET TITLE:
TYPICAL
FLOOR PLAN

SHEET NUMBER:
A1.0-M

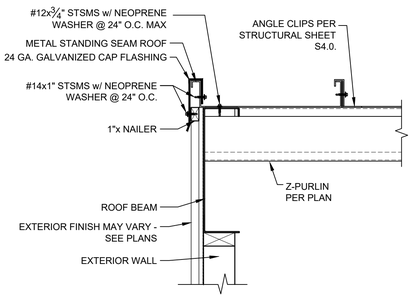

SEE SHEETS A5.0 ~~& A5.2~~ FOR EXTERIOR FINISHES.

METAL ROOF w/ STRAPS 1

SCALE : 1 1/2"=1'-0"

NOT USED 2

NOT USED 3

NOT USED 4

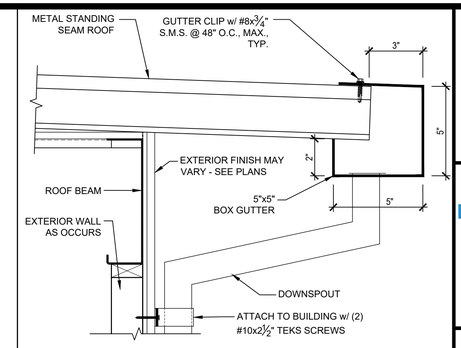

~~SEE DETAIL 8/- WITHOUT OVERHANG, GUTTER, & DOWNSPOUT OPTION.~~
SEE DETAIL 10/- WITH OVERHANG OPTION ONLY.

TYP. GUTTER ATTACHMENT 5

SCALE : 1 1/2"=1'-0"

NOT USED 6

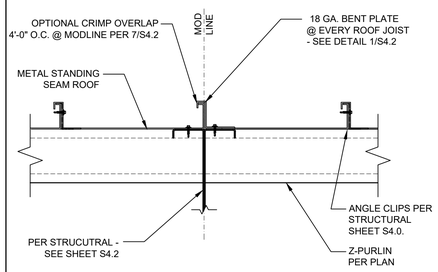

~~NOTE: SEE DETAIL 9/- FOR OPTIONAL MOD LINE CONNECTION AT SEISMIC JOINT.~~

TYP. ROOF BEAM CONN. @ MODLINE 7

SCALE : 1 1/2"=1'-0"

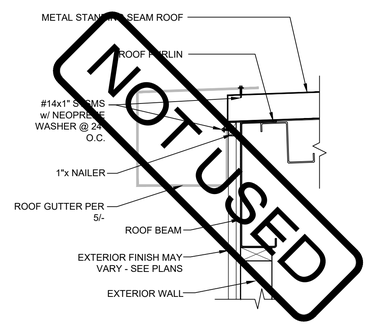

SEE DETAIL 5/- WITH OVERHANG, GUTTER, & DOWNSPOUT OPTION.
SEE DETAIL 10/- WITH OVERHANG OPTION ONLY.

METAL ROOF @ END WALLS (w/o OVERHANGS) 8

SCALE : 1 1/2"=1'-0"

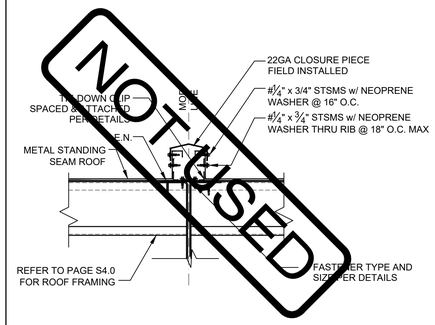

NOTE: SEE DETAIL 7/- FOR TYPICAL MOD-LINE CONNECTION.

METAL ROOF @ MODLINE OPTION 9

SCALE : 1 1/2"=1'-0"

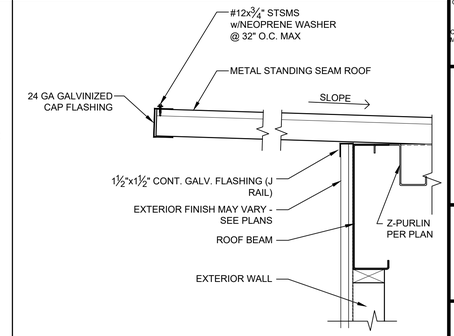

SEE DETAIL 5/- WITH OVERHANG, GUTTER, & DOWNSPOUT OPTION.
~~SEE DETAIL 8/- WITHOUT OVERHANG, GUTTER, & DOWNSPOUT OPTION.~~

METAL ROOF EDGE @ OVERHANG 10

SCALE : 1 1/2"=1'-0"

NOT USED 6

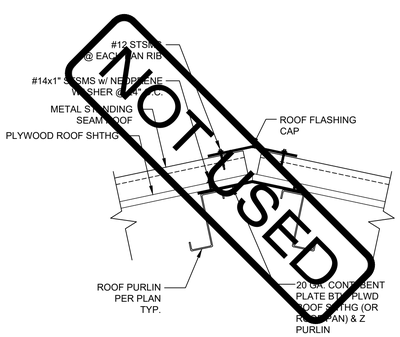

OPTIONAL METAL DUAL SLOPED 11

SCALE: 1-1/2"=1'-0"

NOT USED 12

NOT USED 13

NOT USED 14

NOT USED 15

NOT USED 16

NOT USED 17

NOT USED 18

NOT USED 19

NOT USED 20

IDENTIFICATION STAMP
DIV. OF THE STATE ARCHITECT
APP: 04-125522 INC:
REVIEWED FOR
SS ☑ FLS ☑ ACS ☑
DATE: 08/19/2026

AMS®
American Modular Systems
787 Spreckels Ave., Manteca, CA 95336
Phone (209) 825-1921 Fax (209) 825-7018
www.americanmodular.com

INTELLECTUAL-PROPERTY & PROPRIETARY RIGHTS STATEMENT
COPYRIGHT © AMERICAN MODULAR SYSTEMS (AMS)
AMS OWNS ALL COPYRIGHT AND OTHER INTELLECTUAL-PROPERTY AND PROPRIETARY RIGHTS IN THESE DRAWINGS, SPECIFICATIONS, AND THE MATERIAL CONTAINED HEREIN. CERTAIN ELEMENTS SHOWN IN THESE DOCUMENTS ARE REGISTERED TRADEMARKS OF AMS. ALL PATENTABLE MATERIALS CONTAINED IN THESE DOCUMENTS AND ORIGINATING WITH AMS WILL REMAIN THE SOLE PROPERTY OF AMS. THESE DRAWING, SPECIFICATIONS, AND THE MATERIAL CONTAINED HEREIN MAY NOT BE REPRODUCED, TRANSMITTED, COPIED, DISTRIBUTED, MODIFIED, OR OTHERWISE DISPOSED OF (DIRECTLY OR INDIRECTLY) AND MAY NOT BE USED (IN WHOLE OR IN PART) TO ASSIST IN THE CONSTRUCTION, DESIGN, OR OTHER MAKING OF, OR FOR THE PURPOSE OF FURNISHING ANY INFORMATION FOR THE CONSTRUCTION, DESIGN, OR OTHER MAKING OF, ANY BUILDINGS (MODULAR OR OTHERWISE), DRAWINGS, SPECIFICATIONS, PRINTS, APPARATUS, OR PARTS THEREOF, EXCEPT AS EXPRESSLY PERMITTED BY WRITTEN CONSENT OF, OR IN A WRITTEN AGREEMENT WITH, AMS. SUBMITTAL OR DISTRIBUTION TO MEET OFFICIAL REGULATORY REQUIREMENTS WILL NOT BE CONSTRUED AS PUBLICATION IN DEROGATION OF AMS'S COPYRIGHT OR OTHER INTELLECTUAL-PROPERTY OR PROPRIETARY RIGHTS.

PRE-CHECKED SET NAME

24' x 40' THRU 48' x 40'
(LOW SEISMIC)

2GO®

SITE SPECIFIC PROJECT NAME

.
.
.

APPROVED
DIV. OF THE STATE ARCHITECT
APP: 04-122040 PC
REVIEWED FOR
SS ☑ FLS ☑ ACS ☑ CG ☑
DATE: 11/29/2023

2022 CBC PRE-CHECK (PC) DOCUMENT
A SEPARATE PROJECT APPLICATION FOR CONSTRUCTION IS REQUIRED.

MANUFACTURER PROFESSIONAL OF RECORD ON PC

LICENSED ARCHITECT
ANDREW PATRICK CARNEY
No. C12631
Ren. 3-31-27
STATE OF CALIFORNIA

THESE DRAWINGS ARE PRELIMINARY AND NOT FOR CONSTRUCTION UNLESS STAMPED & SIGNED BY THE DESIGN PROFESSIONAL OF RECORD.

REVISIONS

1
2
3
4

DRAWN BY:	AA
SCALE:	AS NOTED
DATE:	MM/DD/YY
PROJECT NO:	XXXX-22

SHEET TITLE:

TYPICAL ROOF DETAILS
METAL STANDING SEAM

SHEET NUMBER:

A2.2-M

REAR

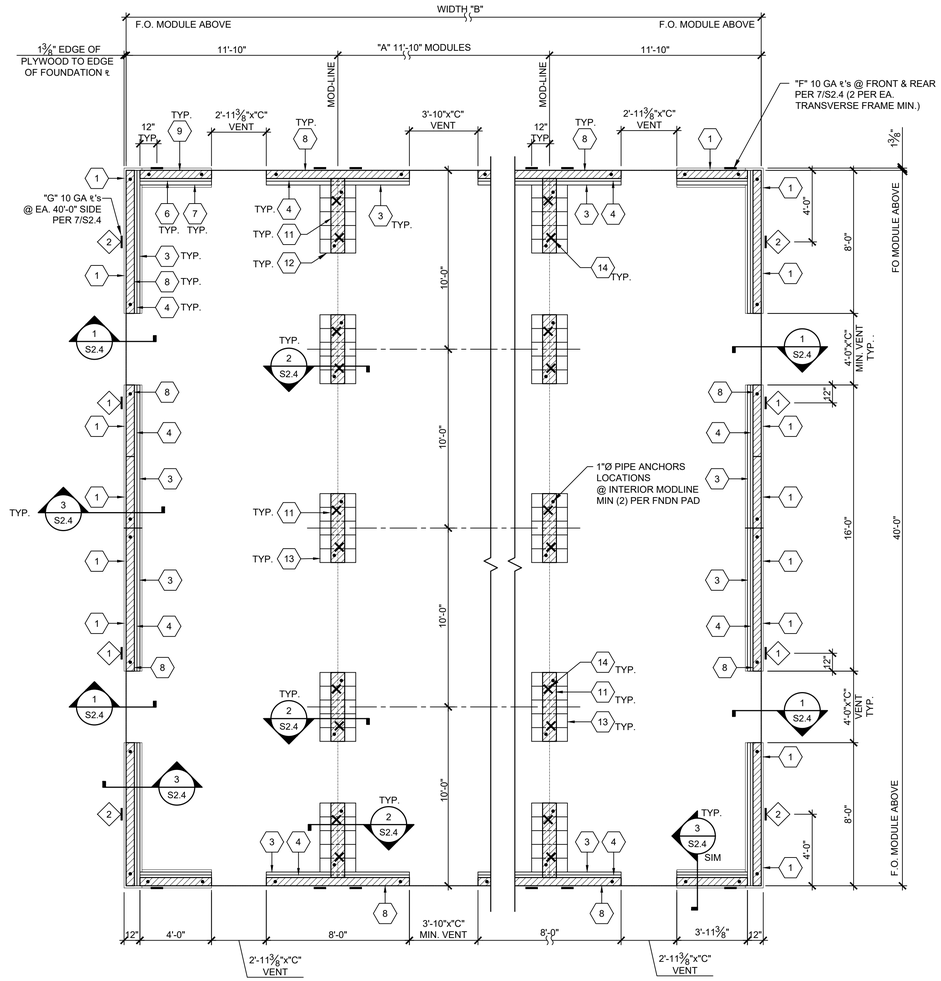

FRONT

1. ½" x 12" WIDE x 48" LONG PT STRUCTURAL PLYWOOD WITH FACE GRAIN IN SHORT DIRECTION (CDX PLYWOOD)
2. NOT USED
3. SINGLE PT 2 x 10 x 8'-0" LONG ℄
4. SINGLE 2 x 8 x 8'-0" LONG
5. NOT USED
6. SINGLE 2 x 8 x 4'-0" LONG ℄
7. SINGLE 2 x 10 x 4'-0" LONG ℄
8. MULTIPLE 2 x 6 x 8'-0" LONG NAILER AS REQ'D FOR HEIGHT
9. MULTIPLE 2 x 6 x 4'-0" LONG NAILER AS REQ'D FOR HEIGHT
10. NOT USED
11. 2 x 10 BLKG, SEE 2/S2.4
12. (5) 2x12x2'-0" PT ℄ OR (7) 2x10x2'-0" PT ℄ OR (8) 2x8x2'-0" PT ℄, SEE 2/S2.4
13. (5) 2x12x2'-0" PT ℄ OR (6) 2x10x2'-0" PT ℄ OR (7) 2x8x2'-0" PT ℄, SEE 2/S2.4
14. X LOCATION OF FLOOR BEAM ATTACHMENT TO ISOLATED PAD. REFER TO DETAIL 2/S2.4

● 1"Ø GALVANIZED PIPE LOCATIONS - TYPICAL. MINIMUM (2) PER FNDN SECTION AT "B" WALLS, 40' WALLS & MODLINES AS SHOWN ON PLAN

KEY NOTES

ON SOIL:
1"Ø STANDARD WEIGHT (1.315 ACTUAL O.D.) HOT DIPPED GALV. PIPE w/ 12" MIN. PENETRATION MEASURED VERTICALLY BELOW SOIL SURFACE @ 10'-0" O.C., MIN. 2 EA. 2x ℄. DRILL SILL 1⅜"Ø MAX. PIPE MAY BE DRIVEN MAX 45° ANGLE TO VERTICAL.

ON A/C PAVING:
1"Ø STANDARD WEIGHT (1.315 ACTUAL O.C.) HOT DIPPED GALV. PIPE w/ 12" MIN. PENETRATION MEASURED VERTICALLY BELOW PAVING SURFACE @ 10'-0" O.C., MIN. 2 EA 2x ℄. DRILL SILL 1⅜"Ø MAX.

ON CONC PAVING:
1"Ø STANDARD WEIGHT (1.315 ACTUAL O.D.) HOT DIPPED GALV. PIPE w/ 12" MIN. PENETRATION MEASURED VERTICALLY BELOW PAVING SURFACE @ 10'-0" O.C., MIN. 2 EA. 2x ℄. DRILL SILL 1⅜"Ø MAX.
ALT: SIMPSON SS (STAINLESS STEEL) STRONG-BOLT 2'S THRU SILL ℄ w/ MIN. CONC. EMBEDMENT PER SCHEDULE BELOW (PROVIDE A MINIMUM OF 2 BOLTS AT 2x PLATE LESS THAN 5'-0" AND 4 BOLTS AT 2x PLATE LARGER THAN 5'-0").
ANCHOR BOLTS SHALL BE CENTERED ON THE 2x PLATES AND LOCATED NO CLOSER THAN 4" FROM THE END OF THE PLATES.

SIMPSON SS STRONG-BOLT 2 O.C. SPACING SCHEDULE (IN.)

BUILDING SIZE	MAX. LONGITUDINAL SPACING @ 40' SIDEWALLS	MAX. LONGITUDINAL SPACING @ MODLINES	MAX. TRANSVERSE SPACING
☒ 24'x40'	124	37	35
☐ 36'x40'	124	37	36
☐ 48'x40'	124	37	42

ANCHOR TYPE	SIMPSON SS STRONG-BOLT 2 ICC ESR-3037
ANCHOR SIZE (IN.)	½"Ø
MIN. CONC. THICKNESS (IN.)	4½"
MIN. NOMINAL EMBED (IN.)	2¾"
MIN. HOLE DEPTH (IN.)	3"
MIN. CONC. EDGE DISTANCE - ANY DIRECTION (IN.)	6½"
INSTALLATION TORQUE (FT-LB)	65

1. TORQUE TEST PER CBC 1910A.5 TORQUE TEST - MANUFACTURER'S RECOMMENDED INSTALLATION TORQUE AS APPROVED IN AN ICC-ESR PER C.B.C 1910A.5

WOOD FOUNDATION PLAN (PLYWOOD FLOOR) 50 P.S.F LIVE LOAD + 15 PSF PARTITION LOAD

SCALE: 1/4"=1-0"

BUILDING SIZE (FT)	TOTAL # OF 12' WIDE MODULES	"A" TOTAL # OF CENTER MODULES	"B" TOTAL FOUNDATION WIDTH	TOTAL FLOOR AREA (FT^2)	NET FREE VENT AREA REQ'D (FT^2)	"C" MINIMUM HT OF VENTS (IN)	NET FREE VENT AREA PROVIDED @ 0.73 CLR COVERAGE PER SHEET NOTES (FT^2)	"D" GALV. NAIL O.C. SPACING (IN) (40' WALLS) SEE 3/S2.4	"E" GALV. NAIL O.C. SPACING (IN) ("B" WALLS) SEE 3/S2.4	"F" # OF 10 GA. SHEAR ℄'S @ FRONT & REAR SEE 3/2.4	"G" # OF 10 GA. SHEAR ℄'S @ SIDES (40' WALLS) SEE 3 & 7/S2.4		"H" EDGE NAIL (EN) SPACING (IN) (40' WALLS) SEE 3/S2.4	"J" EDGE NAIL (EN) SPACING (IN) ("B" WALLS) SEE 3/S2.4	"K" # OF ALT. SHEAR ℄'S @ "B" WALLS (2 PER MOD MIN.) SEE 5/S2.4	"L" GALV. NAIL O.C. SPACING (IN) (MODLINES) SEE 2/S2.4
											# OF ℄'S	℄ LOCATIONS				
☒ 24'x40'	2	0	23'-8 1/4"	960	6.4	4.5	7.6	12	10	4/SIDE	4/SIDE	1 2	6	4	4/SIDE	12
☐ 36'x40'	3	1	35'-6 1/2"	1440	9.6	4.5	9.7	12	10	6/SIDE	4/SIDE	1 2	6	4	6/SIDE	12
☐ 48'x40'	4	2	47'-4 3/4"	1920	12.8	6.0	15.7	12	12	8/SIDE	4/SIDE	1 2	6	4	8/SIDE	12

MODULE SCHEDULE - 48' x 40' MAX

1. TOP OF WOOD PADS TO BE LEVEL.
2. DO NOT INSTALL BUILDINGS IN AREAS OF WATER LINES.
3. SITE TO BE GRADED TO PREVENT WATER PONDING BENEATH THE STRUCTURE.
4. FOUNDATION WOOD TO BE CUT PERPENDICULAR TO THE FACE GRAIN.
5. PER THE CONTRACT OF THIS PROJECT- THE BUILDING PAD MUST BE A MINIMUM OF 38'-0" FRONT TO REAR, BUILDING WIDTH PLUS 6'-0" SIDE TO SIDE AND SHALL NOT EXCEED 6" OUT OF LEVEL IN ANY DIRECTION.
6. PROJECT ARCHITECT SHOULD VERIFY THE NET AREA OF THE VENT COVER BE EQUAL TO OR LARGER THAN THE VENT AREA REQUIRED SHOWN ON THE TABLE.
7. VENT NET AREA REQUIRED (NFA) IS BASED ON A 1:150 VENTILATION RATIO OF THE NOMINAL BUILDING FLOOR AREA. VENT NFA PROVIDED IS THE ACTUAL VENT GROSS OPEN AREA WITH A MINIMUM REDUCTION PERCENTAGE OF 73% DUE TO THE VENT COVER.

SHEET NOTES

FOUNDATIONS:

ALL FOUNDATION MATERIALS IN CONTACT WITH THE GROUND SHALL BE PRESSURE TREATED OR REDWOOD EXCEPT SHIMS MAY BE REDWOOD, HEM FIR OR CEDAR. PRESSURE TREATED DOUGLAS FIR, HEM FIR, PLYWOOD ETC. SHALL BE VERIFIED BY A CERTIFICATE OF TREATMENT STATING: "THE MATERIAL IN THIS UNIT WAS TREATED PER 2022 CALIFORNIA BUILDING CODE. ALL MATERIAL FOR USE IN GROUND CONTACT SHALL BE STAMPED "FOR GROUND CONTACT" (U1 & T1). ALL MATERIAL NOT USED IN GROUND CONTACT SHALL BE HF#2 OR DF#2 "FOR ABOVE GROUND USE." THE IN-PLANT INSPECTOR SHALL VERIFY THAT ALL PRESSURE TREATED FOUNDATION MATERIAL IS CUT FROM AWPA STAMPED STOCK AND THAT ALL CUTS AND HOLES ARE RETREATED PER SPECIFICATIONS. U1 AND T1 MATERIAL SHALL BE BANDED SEPARATELY FOR SHIPMENT TO THE JOB SITE. THE IN-PLANT INSPECTOR'S VERIFICATION OF EACH BANDED UNIT SHALL BE ATTACHED TO THE MATERIAL. CONCRETE OR CONCRETE BLOCK FOUNDATIONS ARE NOT ALLOWED. THE FOOTING DESIGN SHALL PROVIDE FOR SHIMS AND BLOCKS NECESSARY TO PERMIT INSTALLATION ON SITES NOT LEVEL, BUT WITHIN TOLERANCE ALLOWED. INSTALLATION SHALL BE PERMITTED ON EITHER SOIL, CONCRETE OR A/C PAVING, HAVING SUITABLE DESIGN BEARING CAPACITY, THE BUILDINGS SHALL BE SECURELY FASTENED TO THE FOUNDATIONS. THE FOUNDATIONS AND THE METHOD OF FASTENING SHALL BE SUBJECT TO APPROVAL BY THE ARCHITECT AND DSA. PADS SHALL BE DESIGNED FOR A MAXIMUM OF 1000 PSF LOAD ON THE SOIL. PADS SHALL NOT BE PLACED ON TURF.

A VAPOR RETARDING MOISTURE BARRIER SHALL BE INSTALLED UNDER THE FLOOR WHEN THE BUILDING IS INSTALLED LESS THAN 12" ABOVE THE SOIL. A BARRIER IS NOT REQUIRED AT HEIGHT IF THE BUILDING IS INSTALLED OVER CONCRETE (INCLUDING A RAT SLAB) OR A/C/ PAVING.

SILL RESTRAINT

IDENTIFICATION STAMP
DIV. OF THE STATE ARCHITECT
APP: 04-125522 INC:
REVIEWED FOR
SS ☑ FLS ☑ ACS ☑
DATE: 08/19/2026

American Modular Systems
787 Spreckels Ave., Manteca, CA 95336
Phone (209) 825-1921 Fax (209) 825-7018
www.americanmodular.com

INTELLECTUAL-PROPERTY & PROPRIETARY RIGHTS STATEMENT
COPYRIGHT © AMERICAN MODULAR SYSTEMS (AMS)
AMS OWNS ALL COPYRIGHT AND OTHER INTELLECTUAL-PROPERTY AND PROPRIETARY RIGHTS IN THESE DRAWINGS, SPECIFICATIONS, AND THE MATERIAL CONTAINED HEREIN. CERTAIN ELEMENTS SHOWN IN THESE DOCUMENTS ARE REGISTERED TRADEMARKS OF AMS. ALL PATENTABLE MATERIALS CONTAINED IN THESE DOCUMENTS AND ORIGINATING WITH AMS WILL REMAIN THE SOLE PROPERTY OF AMS. THESE DRAWING, SPECIFICATIONS, AND THE MATERIAL CONTAINED HEREIN MAY NOT BE REPRODUCED, TRANSMITTED, COPIED, DISTRIBUTED, MODIFIED, OR OTHERWISE DISPOSED OF (DIRECTLY OR INDIRECTLY) AND MAY NOT BE USED (IN WHOLE OR IN PART) TO ASSIST IN THE CONSTRUCTION, DESIGN, OR OTHER MAKING OF, OR FOR THE PURPOSE OF FURNISHING ANY INFORMATION FOR THE CONSTRUCTION, DESIGN, OR OTHER MAKING OF, ANY BUILDINGS (MODULAR OR OTHERWISE), DRAWINGS, SPECIFICATIONS, PRINTS, APPARATUS, OR PARTS THEREOF, EXCEPT AS EXPRESSLY PERMITTED BY WRITTEN CONSENT OF, OR IN A WRITTEN AGREEMENT WITH, AMS. SUBMITTAL OR DISTRIBUTION TO MEET OFFICIAL REGULATORY REQUIREMENTS WILL NOT BE CONSTRUED AS PUBLICATION IN DEROGATION OF AMS'S COPYRIGHT OR OTHER INTELLECTUAL-PROPERTY OR PROPRIETARY RIGHTS.

PRE-CHECKED SET NAME
24' x 40' THRU 48' x 40'
(LOW SEISMIC)
2GO®

SITE SPECIFIC PROJECT NAME

APPROVED
DIV. OF THE STATE ARCHITECT
APP: 04-122840 PC
REVIEWED FOR
SS ☑ FLS ☑ ACS ☑ CG ☑
DATE: 11/29/2023

☐ 2022 CBC PRE-CHECK (PC) DOCUMENT
A SEPARATE PROJECT APPLICATION FOR CONSTRUCTION IS REQUIRED.

MANUFACTURER PROFESSIONAL OF RECORD ON PC

LICENSED ARCHITECT
MARK PATRICK GAVIN
No. C12631
Ren. 3-31-27
STATE OF CALIFORNIA

REGISTERED PROFESSIONAL ENGINEER
MANAY D. FAGH
No. S3380
STRUCTURAL
STATE OF CALIFORNIA
RST#22214

11/15/2023

THESE DRAWINGS ARE PRELIMINARY AND NOT FOR CONSTRUCTION UNLESS STAMPED & SIGNED BY THE DESIGN PROFESSIONAL OF RECORD.

REVISIONS
1
2
3
4

DRAWN BY:	AA
SCALE:	AS NOTED
DATE:	MM/DD/YY
PROJECT NO:	XXXX-22

SHEET TITLE:
WOOD FOUNDATION PLAN
50 PSF LIVE LOAD + 15 PSF
PARTITION LOAD

SHEET NUMBER:
S2.1-M

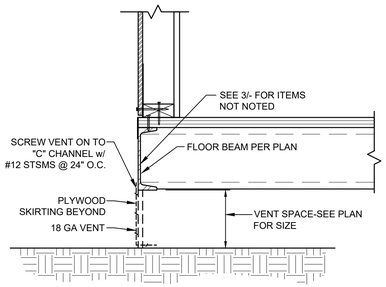

FOUNDATION DETAIL SCALE: 1 1/2"=1-0" 1

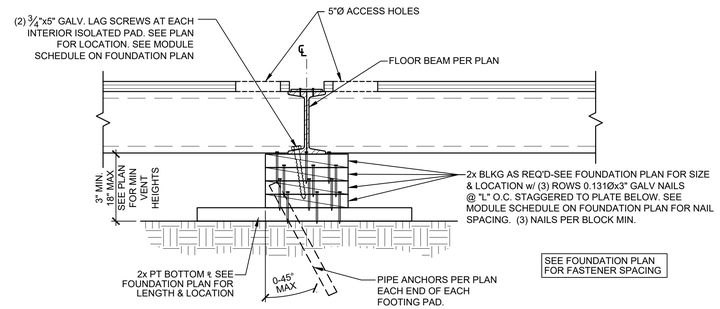

FOUNDATION DETAIL SCALE: 1 1/2"=1-0" 2

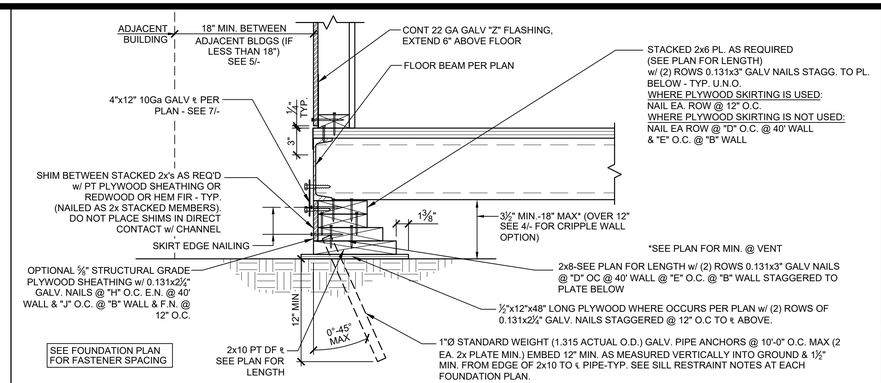

FOUNDATION DETAIL SCALE: 1 1/2"=1-0" 3

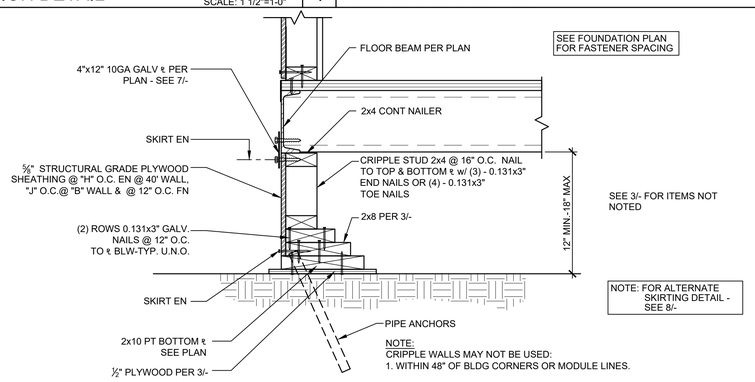

FOUNDATION DETAIL SCALE: 1 1/2"=1-0" 4

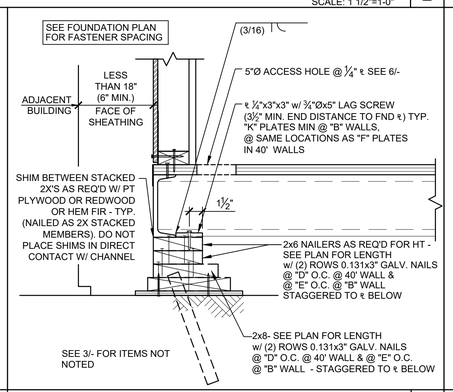

FOUNDATION DETAIL SCALE: 1 1/2"=1-0" 5

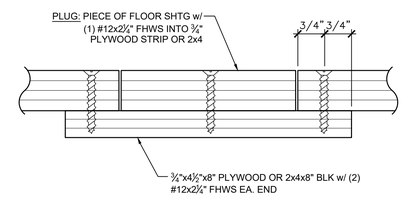

FILLER ACCESS HOLE DETAIL SCALE: 1 1/2"=1-0" 6

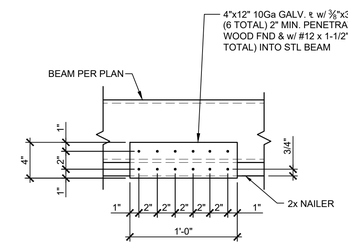

NOTES:
1. PLATE MAY BE INSTALLED OVER SKIRTING
2. SELF-TAPPING SCREWS EXPOSED TO WEATHER SHALL BE ITW BUILDEX TEKS SELECT STRUCTURAL FASTENERS (ICC ESR-3223) OR EQUAL.

FOUNDATION DETAIL SCALE: 1 1/2"=1-0" 7

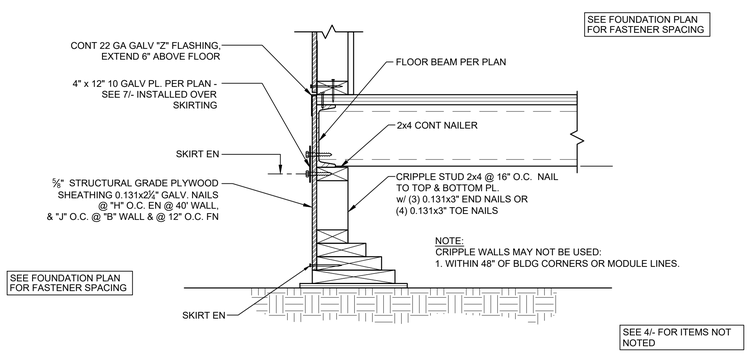

ALTERNATE SKIRTING DETAIL SCALE: 1 1/2"=1-0" 8

NOT USED 9

NOT USED 10

NOT USED 11

NOT USED 12

NOT USED 13

NOT USED 14

NOT USED 15

NOT USED 16

IDENTIFICATION STAMP
DIV. OF THE STATE ARCHITECT
APP: 04-125522 INC:
REVIEWED FOR
SS ☑ FLS ☑ ACS ☑
DATE: 08/19/2026

American Modular Systems
787 Spreckels Ave., Manteca, CA 95336
Phone (209) 825-1921 Fax (209) 825-7018
www.americanmodular.com

INTELLECTUAL-PROPERTY & PROPRIETARY RIGHTS STATEMENT
COPYRIGHT © AMERICAN MODULAR SYSTEMS (AMS)
AMS OWNS ALL COPYRIGHT AND OTHER INTELLECTUAL-PROPERTY AND PROPRIETARY RIGHTS IN THESE DRAWINGS, SPECIFICATIONS, AND THE MATERIAL CONTAINED HEREIN. CERTAIN ELEMENTS SHOWN IN THESE DOCUMENTS ARE REGISTERED TRADEMARKS OF AMS. ALL PATENTABLE MATERIALS CONTAINED IN THESE DOCUMENTS AND ORIGINATING WITH AMS WILL REMAIN THE SOLE PROPERTY OF AMS. THESE DRAWING, SPECIFICATIONS, AND THE MATERIAL CONTAINED HEREIN MAY NOT BE REPRODUCED, TRANSMITTED, COPIED, DISTRIBUTED, MODIFIED, OR OTHERWISE DISPOSED OF (DIRECTLY OR INDIRECTLY) AND MAY NOT BE USED (IN WHOLE OR IN PART) TO ASSIST IN THE CONSTRUCTION, DESIGN, OR OTHER MAKING OF, OR FOR THE PURPOSE OF FURNISHING ANY INFORMATION FOR THE CONSTRUCTION, DESIGN, OR OTHER MAKING OF, ANY BUILDINGS (MODULAR OR OTHERWISE), DRAWINGS, SPECIFICATIONS, PRINTS, APPARATUS, OR PARTS THEREOF, EXCEPT AS EXPRESSLY PERMITTED BY WRITTEN CONSENT OF, OR IN A WRITTEN AGREEMENT WITH, AMS. SUBMITTAL OR DISTRIBUTION TO MEET OFFICIAL REGULATORY REQUIREMENTS WILL NOT BE CONSTRUED AS PUBLICATION IN DEROGATION OF AMS'S COPYRIGHT OR OTHER INTELLECTUAL-PROPERTY OR PROPRIETARY RIGHTS.

PRE-CHECKED SET NAME
24' x 40' THRU 48' x 40'
(LOW SEISMIC)
2GO®

SITE SPECIFIC PROJECT NAME

APPROVED
DIV. OF THE STATE ARCHITECT
APP: 04-129040 PC
REVIEWED FOR
SS ☑ FLS ☑ ACS ☑ CG ☑
DATE: 11/29/2023

2022 CBC PRE-CHECK (PC) DOCUMENT
A SEPARATE PROJECT APPLICATION FOR CONSTRUCTION IS REQUIRED

MANUFACTURER PROFESSIONAL OF RECORD ON PC

LICENSED ARCHITECT
JOSHUA PATRICK CAYABYAB
No. C12631
Ren. 3-31-27
STATE OF CALIFORNIA

REGISTERED PROFESSIONAL ENGINEER
MARVIN D. FRANK
No. S3380
STRUCTURAL
STATE OF CALIFORNIA
RST#22214

11/15/2023

THESE DRAWINGS ARE PRELIMINARY AND NOT FOR CONSTRUCTION UNLESS STAMPED & SIGNED BY THE DESIGN PROFESSIONAL OF RECORD.

REVISIONS
1
2
3
4

DRAWN BY:	AA
SCALE:	AS NOTED
DATE:	MM/DD/YY
PROJECT NO:	XXXX-22

SHEET TITLE:
WOOD FOUNDATION DETAILS

SHEET NUMBER:
S2.4-M

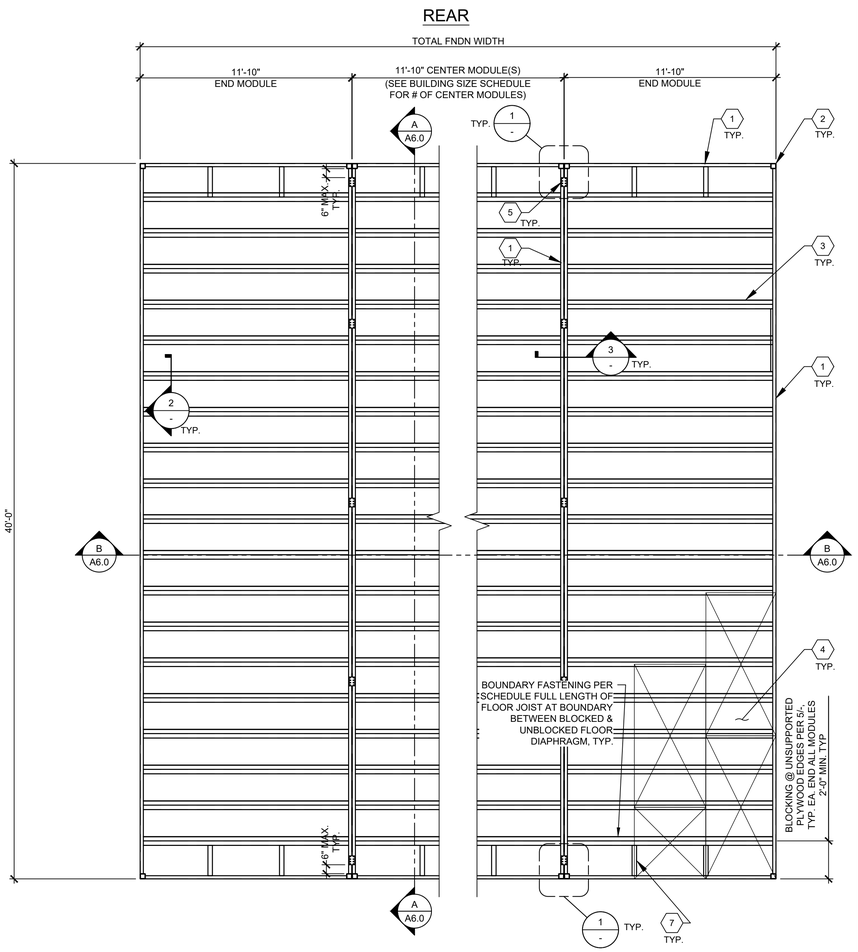

FOR 'B' OFFICE OCCUPANCIES 12 GA FLOOR JOISTS MUST BE USED

FLOOR JOIST SCHEDULE		
LIVE LOAD PSF	14 GA. JOIST	12 GA. JOIST
☐ 50 PSF	24" O.C.	24" O.C.
☒ 50+15 PSF	24" O.C.	24" O.C.
☐ 100 PSF	24" O.C.	24" O.C.

NOTES:
FOR SECTION PROPERTIES - SEE S0.0.
EITHER 14GA OR 12GA ARE ACCEPTABLE BASED ON CURRENT AVAILABILITIES.

FRAMING PLAN (PLYWOOD FLOOR) SCALE : 1/4" = 1'-0" A

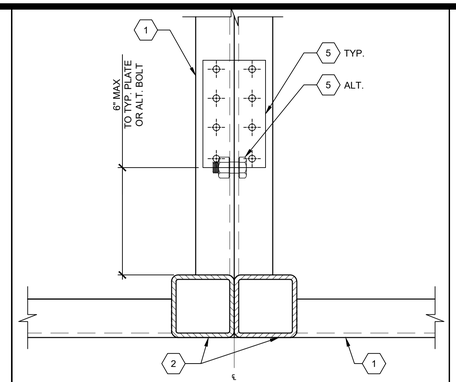

TYP. FLOOR BEAMS CONNECTION SCALE : 3" = 1'-0" 1

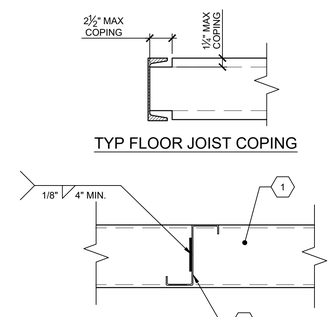

TYP FLOOR JOIST COPING

TYP. JOIST ATTACTMENT TO BEAM SCALE : 3" = 1'-0" 2

1. FLOOR BEAM PER SHEET S5.0. USE SINGLE SIZE CHANNEL THROUGHOUT FLOOR SYSTEM.
2. HSS COLUMN PER SHEET S5.0
3. FLOOR JOIST - SEE SCHEDULE
4. 1⅛" T&G PLYWOOD FLOOR SHTG STURDI-I-FLOOR 48" O.C. SPAN RATING EXP. 1 CONFORMING TO PS 1-19, 2 SPANS MIN. OPTION: UNI-FLOOR BY PITTSBURGH TESTING LAB CONFORMING TO PS 1-19. STAGGER SHEETS 48" O.C. AS SHOWN w/ FACE GRAIN PERPENDICULAR TO FLOOR JOISTS. FASTEN PER SCHEDULES.
5. PLATE ½"x3½"x6" @ 10'-0" O.C. MAX w/ (8) #12x1" SDSTS; SEE DETAIL 3/-. ALTERNATE: ½"Øx1½" MB @ 10'-0" O.C. MAX AND 6" MAX FROM EACH END OF MODULE. BOLT Ø $\pm\frac{1}{16}$" MAX HOLE THRU CHANNELS; SEE DETAIL 3/-.
6. NOT USED
7. 2 ¾"x2 ¾"x 14Ga. BLOCKING ANGLE PER DETAIL 5/-, AT UNSUPPORTED PLYWOOD EDGES WHERE SPECIFIED ON THE FLOOR FRAMING PLAN.

KEY NOTES

1. NOT USED
2. THE MATERIAL THICKNESS OF LIGHT GAUGE STRUCTURAL MEMBERS, IN THEIR END-USE, SHALL MEET OR EXCEED THE MINIMUM BASE METAL THICKNESS SPECIFIED ON SHEET S0.O. THE MATERIAL GAUGE DESIGNATION IN THE PLAN SHALL BE USED AS REFERENCE ONLY.
3. SDSTS PER ASTM C1513 AND ICC ESR-1976 (OR EQUAL)
4. ET&F PINS PER IAPMO REPORT ER-335

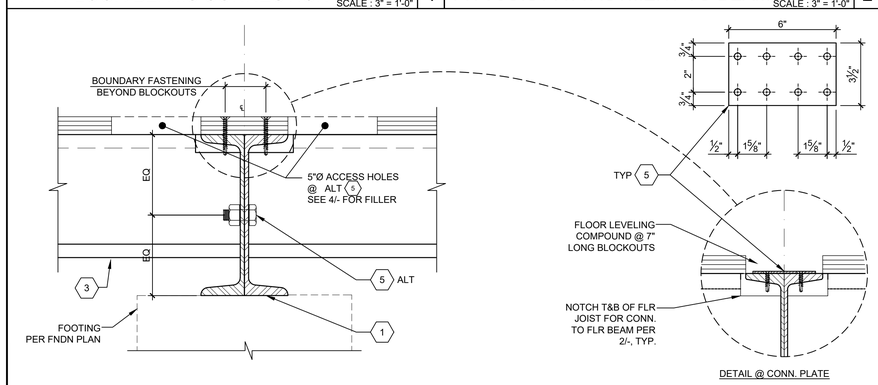

TYP. BEAM TO BEAM CONNECTION SCALE : 3" = 1'-0" 3

GENERAL NOTES

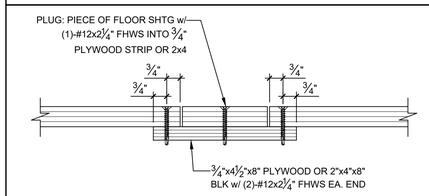

TYP. ACCESS HOLE FILLER SCALE : 3" = 1'-0" 4

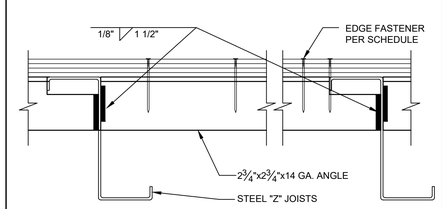

OPTIONAL BLOCKING ANGLE ATTACHMENT SCALE : 3" = 1'-0" 5

NOT USED 6

NOT USED

BUILDING SIZE (FT)	TOTAL # OF 12' WIDE MODULES	TOTAL # OF CENTER MODULES	OVERALL SIZE
☒ 24'x40'	2	0	23'-8 1/4"
☐ 36'x40'	3	1	35'-6 1/2"
☐ 48'x40'	4	2	47'-4 3/4"

BUILDING SIZE SCHEDULE

TYP. FASTENER SPACING SCHEDULE		
BOUNDARY FASTENING*	EDGE FASTENING	FIELD FASTENING
#12x2¼" SDSTS	0.144"Øx2" ET&F PINS	0.144"Øx2" ET&F PINS
6" O.C.	6" O.C.	12" O.C.

*BOUNDARY FASTENING IS APPLIED TO PERIMETER OF ALL MODULES ALONG FRAME LINES
NOTE: SCHEDULE APPLIES TO ALL FLOOR LIVE LOADS

TYPICAL FASTENER SPACING SCHEDULE

ALT. FASTENER SPACING SCHEDULE		
BOUNDARY FASTENING*	EDGE FASTENING	FIELD FASTENING
#12x2¼" SDSTS	#10 OR #12x2¼" SDSTS	#10 OR #12x2¼" SDSTS
6" O.C.	6" O.C.	12" O.C.

*BOUNDARY FASTENING IS APPLIED TO PERIMETER OF ALL MODULES ALONG FRAME LINES
NOTE: SCHEDULE APPLIES TO ALL FLOOR LIVE LOADS

ALTERNATE FASTENER SPACING SCHEDULE

NOT USED 7

IDENTIFICATION STAMP
DIV. OF THE STATE ARCHITECT
APP: 04-125522 INC:
REVIEWED FOR
SS ☑ FLS ☑ ACS ☑
DATE: 08/19/2026

American Modular Systems
787 Spreckels Ave., Manteca, CA 95336
Phone (209) 825-1921 Fax (209) 825-7018
www.americanmodular.com

INTELLECTUAL-PROPERTY & PROPRIETARY RIGHTS STATEMENT
COPYRIGHT © AMERICAN MODULAR SYSTEMS (AMS)
AMS OWNS ALL COPYRIGHT AND OTHER INTELLECTUAL-PROPERTY AND PROPRIETARY RIGHTS IN THESE DRAWINGS, SPECIFICATIONS, AND THE MATERIAL CONTAINED HEREIN. CERTAIN ELEMENTS SHOWN IN THESE DOCUMENTS ARE REGISTERED TRADEMARKS OF AMS. ALL PATENTABLE MATERIALS CONTAINED IN THESE DOCUMENTS AND ORIGINATING WITH AMS WILL REMAIN THE SOLE PROPERTY OF AMS. THESE DRAWING, SPECIFICATIONS, AND THE MATERIAL CONTAINED HEREIN MAY NOT BE REPRODUCED, TRANSMITTED, COPIED, DISTRIBUTED, MODIFIED, OR OTHERWISE DISPOSED OF (DIRECTLY OR INDIRECTLY) AND MAY NOT BE USED (IN WHOLE OR IN PART) TO ASSIST IN THE CONSTRUCTION, DESIGN, OR OTHER MAKING OF, OR FOR THE PURPOSE OF FURNISHING ANY INFORMATION FOR THE CONSTRUCTION, DESIGN, OR OTHER MAKING OF, ANY BUILDINGS (MODULAR OR OTHERWISE), DRAWINGS, SPECIFICATIONS, PRINTS, APPARATUS, OR PARTS THEREOF, EXCEPT AS EXPRESSLY PERMITTED BY WRITTEN CONSENT OF, OR IN A WRITTEN AGREEMENT WITH, AMS. SUBMITTAL OR DISTRIBUTION TO MEET OFFICIAL REGULATORY REQUIREMENTS WILL NOT BE CONSTRUED AS PUBLICATION IN DEROGATION OF AMS'S COPYRIGHT OR OTHER INTELLECTUAL-PROPERTY OR PROPRIETARY RIGHTS.

PRE-CHECKED SET NAME
24' x 40' THRU 48' x 40'
(LOW SEISMIC)
2GO®

SITE SPECIFIC PROJECT NAME

APPROVED
DIV. OF THE STATE ARCHITECT
APP: 04-122040 PC
REVIEWED FOR
SS ☑ FLS ☑ ACS ☑ CG ☑
DATE: 11/29/2023

☐ 2022 CBC PRE-CHECK (PC) DOCUMENT
A SEPARATE PROJECT APPLICATION FOR CONSTRUCTION IS REQUIRED

MANUFACTURER PROFESSIONAL OF RECORD ON PC

LICENSED ARCHITECT PATRICK CONLEY HIGHT No. C12631 Ren. 3-31-27 STATE OF CALIFORNIA

REGISTERED PROFESSIONAL ENGINEER BENJAMIN D. FRANKLIN No. S3380 STRUCTURAL STATE OF CALIFORNIA RST#22214

11/15/2023

THESE DRAWINGS ARE PRELIMINARY AND NOT FOR CONSTRUCTION UNLESS STAMPED & SIGNED BY THE DESIGN PROFESSIONAL OF RECORD.

REVISIONS
1
2
3
4

DRAWN BY:	AA
SCALE:	AS NOTED
DATE:	MM/DD/YY
PROJECT NO:	XXXX-22

SHEET TITLE:
FLOOR FRAMING PLAN & DETAILS FOR PLYWOOD FLOOR

SHEET NUMBER:
S3.0-M

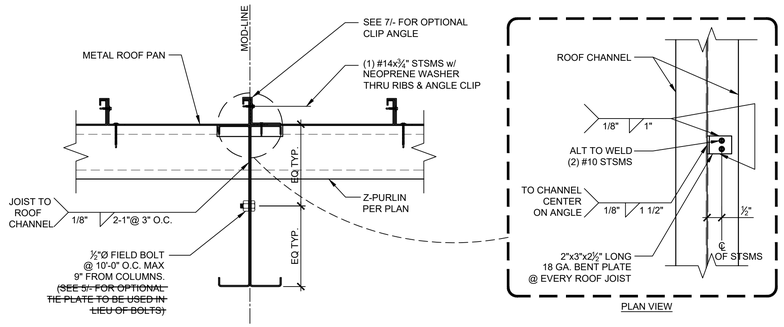

ROOF BEAM CONNECTION DETAIL — SCALE: 1 1/2"=1'-0" — 1

NOT USED — 2

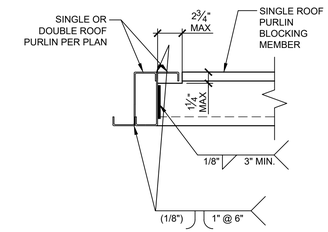

BLOCKING & DBL PURLIN CONNECTION DETAIL — SCALE: 1 1/2"=1'-0" — 3

NOT USED — SCALE: 1 1/2"=1'-0" — 4

NOT USED — 5

NOT USED — 6

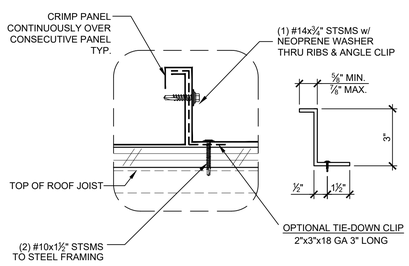

NOTE:
MECHANICALLY CRIMP EACH STANDING SEAM ENTIRELY.
MECHANICALLY CRIMP PANELS OVER ALL CLIPS.

ROOF DETAIL (OPTIONAL ROOF PAN CLIP) — SCALE: 1 1/2"=1'-0" — 7

NOT USED — 8

NOT USED — 9

NOT USED — 10

NOT USED — 11

NOT USED — 12

NOT USED — 13

NOT USED — 14

NOT USED — 15

1. THE MATERIAL THICKNESS OF LIGHT GAUGE STRUCTURAL MEMBERS, IN THEIR END-USE, SHALL MEET OR EXCEED THE MINIMUM BASE METAL THICKNESS SPECIFIED ON SHEET S0.0 THE MATERIAL GAGE DESIGNATION IN THE PLAN SHALL BE USED AS REFERENCE ONLY.

GENERAL NOTES

IDENTIFICATION STAMP
DIV. OF THE STATE ARCHITECT
APP: 04-125522 INC:
REVIEWED FOR
SS ☑ FLS ☑ ACS ☑
DATE: 08/19/2026

American Modular Systems
787 Spreckels Ave., Manteca, CA 95336
Phone (209) 825-1921 Fax (209) 825-7018
www.americanmodular.com

INTELLECTUAL-PROPERTY & PROPRIETARY RIGHTS STATEMENT
COPYRIGHT © AMERICAN MODULAR SYSTEMS (AMS)
AMS OWNS ALL COPYRIGHT AND OTHER INTELLECTUAL-PROPERTY AND PROPRIETARY RIGHTS IN THESE DRAWINGS, SPECIFICATIONS, AND THE MATERIAL CONTAINED HEREIN. CERTAIN ELEMENTS SHOWN IN THESE DOCUMENTS ARE REGISTERED TRADEMARKS OF AMS. ALL PATENTABLE MATERIALS CONTAINED IN THESE DOCUMENTS AND ORIGINATING WITH AMS WILL REMAIN THE SOLE PROPERTY OF AMS. THESE DRAWING, SPECIFICATIONS, AND THE MATERIAL CONTAINED HEREIN MAY NOT BE REPRODUCED, TRANSMITTED, COPIED, DISTRIBUTED, MODIFIED, OR OTHERWISE DISPOSED OF (DIRECTLY OR INDIRECTLY) AND MAY NOT BE USED (IN WHOLE OR IN PART) TO ASSIST IN THE CONSTRUCTION, DESIGN, OR OTHER MAKING OF, OR FOR THE PURPOSE OF FURNISHING ANY INFORMATION FOR THE CONSTRUCTION, DESIGN, OR OTHER MAKING OF, ANY BUILDINGS (MODULAR OR OTHERWISE), DRAWINGS, SPECIFICATIONS, PRINTS, APPARATUS, OR PARTS THEREOF, EXCEPT AS EXPRESSLY PERMITTED BY WRITTEN CONSENT OF, OR IN A WRITTEN AGREEMENT WITH, AMS. SUBMITTAL OR DISTRIBUTION TO MEET OFFICIAL REGULATORY REQUIREMENTS WILL NOT BE CONSTRUED AS PUBLICATION IN DEROGATION OF AMS'S COPYRIGHT OR OTHER INTELLECTUAL-PROPERTY OR PROPRIETARY RIGHTS.

PRE-CHECKED SET NAME
24' x 40' THRU 48' x 40'
(LOW SEISMIC)
2GO®

SITE SPECIFIC PROJECT NAME
.
.
.

APPROVED
DIV. OF THE STATE ARCHITECT
APP: 04-122040 PC
REVIEWED FOR
SS ☑ FLS ☑ ACS ☑ CG ☑
DATE: 11/29/2023

2022 CBC PRE-CHECK (PC) DOCUMENT
A SEPARATE PROJECT APPLICATION FOR CONSTRUCTION IS REQUIRED.

MANUFACTURER PROFESSIONAL OF RECORD ON PC

LICENSED ARCHITECT — ANDREW PATRICK MCNAMARA — No. C12631 — Ren. 3-31-27 — STATE OF CALIFORNIA

REGISTERED PROFESSIONAL ENGINEER — MARK D. FRITCH — No. S3380 — STRUCTURAL — STATE OF CALIFORNIA — RST#22214

11/15/2023

THESE DRAWINGS ARE PRELIMINARY AND NOT FOR CONSTRUCTION UNLESS STAMPED & SIGNED BY THE DESIGN PROFESSIONAL OF RECORD.

REVISIONS
1
2
3
4

DRAWN BY:	AA
SCALE:	AS NOTED
DATE:	MM/DD/YY
PROJECT NO:	XXXX-22

SHEET TITLE:
ROOF FRAMING DETAILS

SHEET NUMBER:
S4.2-M

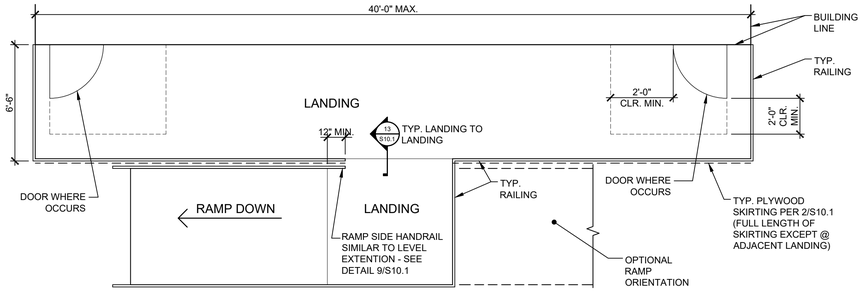

TYPICAL ARCHITECTURAL PLAN

SCALE: 1/4"=1'-0"

RAMP AND LANDING DATA

OCCUPANCY	TO MATCH BUILDING
SNOW AND ICE LOAD	NOT CONSIDERED
RAMP LIVE LOAD (MAX. PSF)	100 (1,000# CONCENTRATED LD)
DESIGN DEAD LOADS (MAX PSF)	12.0
ALLOWABLE SOIL PRESSURE (PSF)	1,000 FOR WOOD FOUNDATION
LATERAL LOADS	TO MATCH MAX BUILDING REQUIREMENTS
LANDING - PERPENDICULAR TO RAMP DIRECTION & RAMP	OTHER SELF-SUPPORTING STRUCTURE (SEE FRAMES - 7/S10.1) R=1.25 I = 1.0 Ωo = 2.0
LANDING - PARALLEL TO RAMP DIRECTION	PLYWOOD SKIRTING (SHEARWALL)* (SEE DETAIL 2/S10.1)

* NOTE:
LANDING SECTIONS BUILT-UP AGAINST THE BUILDING ARE NOT REQUIRED TO HAVE SKIRTING PER DETAIL 2/S10.1.
THE LANDING IS DESIGNED AS AN OPEN FRONT DIAPHRAGM TO BE LATERALLY CANTILEVERED OFF THE FRONT SKIRTING AND THE FRAMES DETAILED ON 7/S10.1.

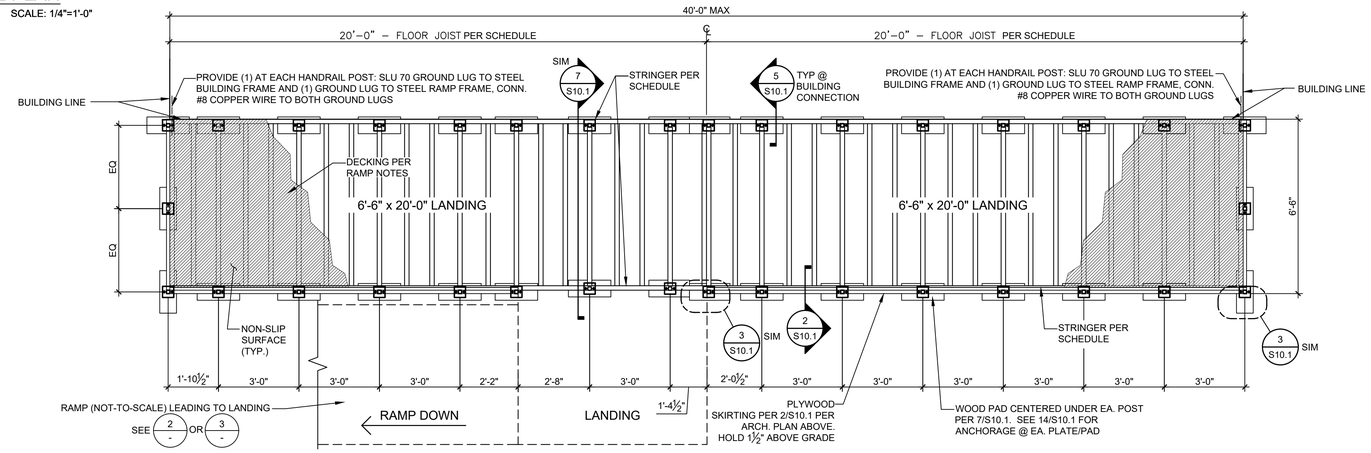

LANDING PLAN OPTION

SCALE: 3/8" = 1'-0" | 1

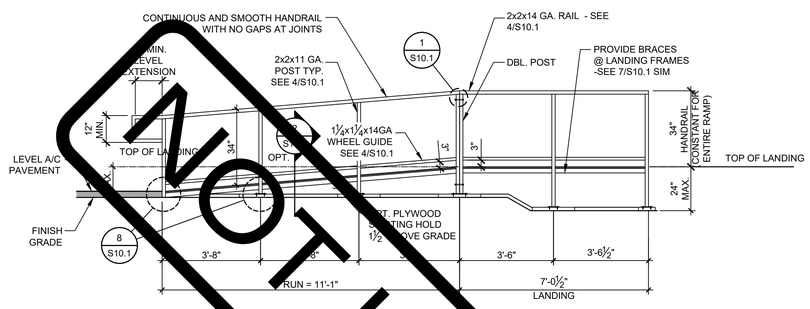

NOT USED

NOTE: RAMP & LANDING TO BE FABRICATED IN SECTIONS (2 MIN.) FOR MOVING

RAMP ELEVATION

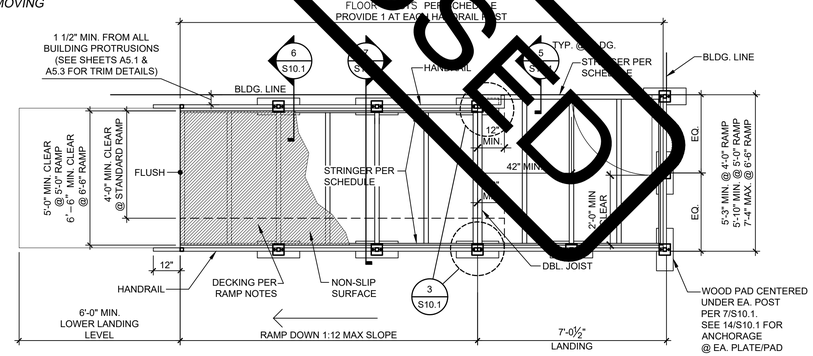

NOTE: FOR RAMP & LANDING MINIMUM REQUIREMENTS, SEE DETAIL 16/A1.0

11-FOOT TYPICAL RAMP

SCALE: 3/8" = 1'-0" | 2

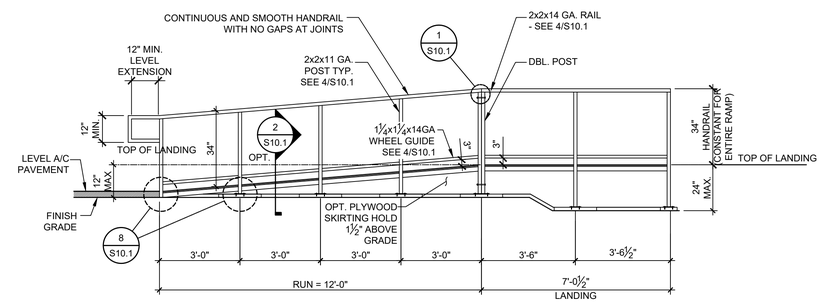

NOTE: RAMP & LANDING TO BE FABRICATED IN SECTIONS (2 MIN.) FOR MOVING

RAMP ELEVATION

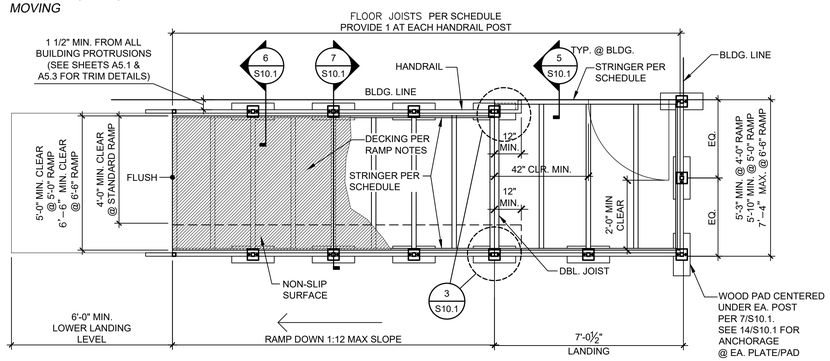

NOTE: FOR RAMP & LANDING MINIMUM REQUIREMENTS, SEE DETAIL 16/A1.0

12-FOOT TYPICAL RAMP

SCALE: 3/8" = 1'-0" | 3

1. ENTRY RAMP AND LANDING SPECIFICATIONS

EACH BUILDING SHALL HAVE A RAMP AND LANDING TO CONFORM TO TITLE 24 C.C.R. SECTIONS 11B-405, 1010 AND 1012. THE RAMP AND LANDING STRUCTURES INCLUDING HANDRAILS AND WHEEL GUIDE RAILS ARE TO BE PREFABRICATED METAL IN SECTIONS THAT ARE DEMOUNTABLE FOR MOVING AND REINSTALLATION AT A NEW SITE.
HANDRAILS AND WHEEL GUIDE RAILS SHALL BE CONTINUOUS AND SMOOTH WITH NO GAPS AT JOINTS. DESIGN SHALL BE SUCH THAT HEIGHT ADJUSTMENT CAN BE MADE AT THE INSTALLATION SITE. THE RAMP AND LANDING SURFACE SHALL BE ¾" MARINE GRADE PLYWOOD OR 11GA SHEET METAL. RAMP AND LANDING SHALL HAVE A NON-SLIP SURFACE FINISH APPLIED. NON-SLIP FINISH SHALL BE AMCOE GRIP II MANUFACTURED BY AMERICAN ABRASIVE METALS OR COMPARABLE. ALL RAMP SURFACES SHALL BE PAINTED AS INDICATED IN SECTION 9B ON SHEET N1.0. RAMPS SHALL HAVE HANDRAILS ON BOTH SIDES. WALL MOUNTED HANDRAILS SHALL BE OF SIMILAR CONSTRUCTION TO THE INTEGRAL RAMP HANDRAIL AND MOUNTED AT THE SAME HEIGHT. RAMP AND LANDING SHALL BE FULLY SKIRTED WITH THE SAME MATERIAL USED FOR BUILDING SKIRT. SIDES OF RAMP AND LANDING THAT DO NOT ADJOIN BUILDING WALL SHALL BE SKIRTED. ALL EDGES OF THE PLYWOOD SKIRT SHALL BE SUPPORTED AND PROTECTED FROM WEATHER. FOUNDATION MEMBERS SHALL BE AS FOR BUILDING FOUNDATION. ONLY THE FOUNDATION PAD RESTING ON GRADE MAY EXTEND BEYOND THE OUTSIDE FACE OF THE SKIRT 1" MAXIMUM.

2. FLOOR DECKING

¾" MARINE EXTERIOR A.P.A. 48/24 PLYWOOD w/ NON-SLIP SURFACE. DECK SURFACES SHALL BE SEALED ON ALL SIDES. FASTENED TO STEEL FRAMING WITH #10 SELF DRILLING BUGLE HEAD 1" GALV. SCREWS OR 0.144"Øx1 ½" MIN. GALV ET&F PINS (IAPMO REPORT ER-335) OR EQUIV. @ 6" O.C. EDGES AND 12" O.C. FIELD, TYP.
PROVIDE ATTACHMENT @ 6" O.C. TO JOISTS BETWEEN HANDRAIL POST AS SHOWN ON DETAIL 7/S10.1.

3. ALT. FLOOR DECKING

10 GA. SHEET METAL WITH NON-SLIP SURFACE (0.8 MIN COEFFICIENT OF FRICTION) ATTACHED TO STEEL FRAMING WITH #12x1" STS @ 6" O.C. E.N. & 12" O.C. F.N.
PROVIDE ATTACHMENT @ 6" O.C. TO JOISTS BETWEEN HANDRAIL POST AS SHOWN ON DETAIL 7/S10.1. MATERIAL STRENGTH SHALL BE 36 KSI MIN. w/ A MODULUS OF ELASTICITY OF 29,500 KSI ± 3%. ACCEPTABLE STEEL MATERIALS INCLUDE, BUT ARE NOT LIMITED TO, THE FOLLOWING: ASTM A1011 SS GRADE 36 (Fy=36 KSI) ASTM A653 SS GRADE 37 (Fy=37 KSI) ASTM A1008 SS GRADE 40 (Fy=40 KSI).

4. GROUNDING OF BUILDING COMPONENT

CONTRACTOR SHALL BE RESPONSIBLE FOR PROVIDING NECESSARY CONNECTORS TO GROUND THE METAL PORTIONS OF THE BUILDING (I.E. FRAME, RAMP, ETC.)
GROUNDING ROD, WIRES AND TESTING SHALL BE PROVIDED BY OTHER AND MEET THE REQUIREMENTS OF I.R. E-1 ISSUED BY D.S.A.

5. RAMP SLOPE

RAMPS SHALL NOT SLOPE MORE THAN 1" RISE OVER A 12" RUN (1:12). CROSS SLOPE SHALL NOT EXCEED 1:48.

6. HANDRAILS

HANDRAILS SHALL BE INSTALLED ON BOTH SIDES OF RAMP AT 34" HIGH. HANDRAILS SHALL BE AT A CONSISTENT VERTICAL HEIGHT FOR THE ENTIRE STRUCTURE.

7. RAMP PLANNING

DUE TO VARYING SITE CONDITIONS, THE MAXIMUM HEIGHT OF FINISH FLOOR FROM GRADE IS 24", THEREFORE IT IS POSSIBLE THAT THE ACCESS RAMP ATTACHED TO THE BUILDING COULD BE 24'-0" LONG AT A SLOPE OF 1:12. ARCHITECT MUST TAKE INTO ACCOUNT THAT THE RAMP SUPPLIED BY AMS, INC. IS 12'-0" LONG AT A SLOPE OF 1:12, THEREFORE THE ARCHITECT WILL HAVE TO DESIGN AND PROVIDE SUFFICIENT DETAILS OF RAMP EXTENSIONS AND BOTTOM LANDING DEPENDING ON PARTICULAR SITE CONDITIONS. IN NO WAY IS AMS, INC. RESPONSIBLE FOR ANY RAMP EXTENSION EXCEEDING THE ORIGINAL PLAN AS SHOWN ON THIS SHEET.

8. LANDINGS

OVERALL LENGTH OF A LANDING MAY VARY FROM 60" UP TO 40'-0". LENGTH MUST CONFORM TO APPROVED LANDING. SLOPE LANDING NOT TO EXCEED 1:48 TO PREVENT WATER PONDING.

9. FASTENERS

ALL EXTERIOR USE FASTENERS SHALL BE GALVANIZED OR STAINLESS STEEL.

10. WELDING

THE DESIGN PROFESSIONAL HAS EXEMPTED THIS RAMP FROM SPECIAL INSPECTION REQUIREMENTS FOR MATERIAL IDENTIFICATION AND STRUCTURAL WELDING. RAMP SHALL NOT BE MODIFIED NOR HAVE SHIMS ADDED CAUSING THE DISTANCE BETWEEN THE HIGHEST RAMP WALKING SURFACE AND THE ADJACENT GRADE TO BE MORE THAN 30 INCHES. IF THIS CONDITION IS NOT MET, STRUCTURAL TESTING AND/OR INSPECTION WILL BE REQUIRED TO VERIFY MATERIALS AND STRUCTURAL WELDING. THIS APPLIES TO SCOPES OF WORK INCLUDING NEW CONSTRUCTION, ALTERATION, OR RELOCATION OF THE RAMP.

RAMP NOTES

STRINGER SCHEDULE(1)

RAMP/LANDING WIDTH	MAX STRINGER SPANS (FT)		
	3'-0"	3'-6"	3'-9"
4'-0"	2x2x11 GA	2x2x11 GA	HSS 2x2x3/16
5'-0"	2x2x11 GA	2x2x11 GA	HSS 2x2x3/16
~~5'-10"~~	~~2x2x11 GA~~	~~2x2x11 GA~~	~~HSS 2x2x3/16~~
6'-6"	2x2x11 GA	2x2x11 GA	HSS 2x2x3/16
~~7'-4"~~	~~2x2x11 GA~~	~~2x2x11 GA~~	~~HSS 2x2x3/16~~

(1) SEE 4/S10.1 FOR LIGHT GAUGE STEEL TUBE PROPERTIES, SIZES INDICATED ARE MINIMUM. THICKER TUBES MAY BE USED. HSS 2x2x1/8 OR LARGER PER 11/S10.1 MAY BE SUBSTITUTED FOR LIGHT GAUGE TUBES.

JOIST SCHEDULE(1)

RAMP/ LANDING WIDTH	MAX JOIST SPACING									
	2x2x14 GA.		2x2x11 GA.		HSS 2x2x5/8		HSS 2x2x3/16		HSS 2x2x1/4	
	DECKING		DECKING		DECKING		DECKING		DECKING	
	PLY	10 GA.	PLY	10 GA.	PLY	10 GA.	PLY	10 GA.	PLY	10 GA.
4'-0"	16"	11"	16"	14"	16"	14"	16"	14"	16"	14"
5'-0"	14"	11"	16"	14"	16"	14"	16"	14"	16"	14"
~~5'-5½"~~	~~-~~	~~-~~	~~12"~~	~~12"~~	~~12"~~	~~12"~~	~~16"~~	~~14"~~	~~16"~~	~~14"~~
5'-10"	-	-	12"	12"	12"	12"	15"	14"	16"	14"
6'-6"	-	-	-	-	-	-	12"	12"	14"	14"
~~7'-4"~~	~~-~~	~~-~~	~~-~~	~~-~~	~~-~~	~~-~~	~~9"~~	~~9"~~	~~11"~~	~~11"~~

(1) SEE 4/S10.1 FOR LIGHT GAUGE STEEL TUBE PROPERTIES, AND 11/S10.1 FOR HSS PROPERTIES

RAMP/ LANDING MEMBER SCHEDULE

IDENTIFICATION STAMP
DIV. OF THE STATE ARCHITECT
APP: 04-125522 INC:
REVIEWED FOR
SS ☑ FLS ☑ ACS ☑
DATE: 08/19/2026

American Modular Systems
787 Spreckels Ave., Manteca, CA 95336
Phone (209) 825-1921 Fax (209) 825-7018
www.americanmodular.com

INTELLECTUAL-PROPERTY & PROPRIETARY RIGHTS STATEMENT
COPYRIGHT © AMERICAN MODULAR SYSTEMS (AMS)
AMS OWNS ALL COPYRIGHT AND OTHER INTELLECTUAL-PROPERTY AND PROPRIETARY RIGHTS IN THESE DRAWINGS, SPECIFICATIONS, AND THE MATERIAL CONTAINED HEREIN. CERTAIN ELEMENTS SHOWN IN THESE DOCUMENTS ARE REGISTERED TRADEMARKS OF AMS. ALL PATENTABLE MATERIALS CONTAINED IN THESE DOCUMENTS AND ORIGINATING WITH AMS WILL REMAIN THE SOLE PROPERTY OF AMS. THESE DRAWING, SPECIFICATIONS, AND THE MATERIAL CONTAINED HEREIN MAY NOT BE REPRODUCED, TRANSMITTED, COPIED, DISTRIBUTED, MODIFIED, OR OTHERWISE DISPOSED OF (DIRECTLY OR INDIRECTLY) AND MAY NOT BE USED (IN WHOLE OR IN PART) TO ASSIST IN THE CONSTRUCTION, DESIGN, OR OTHER MAKING OF, OR FOR THE PURPOSE OF FURNISHING ANY INFORMATION FOR THE CONSTRUCTION, DESIGN, OR OTHER MAKING OF, ANY BUILDINGS (MODULAR OR OTHERWISE), DRAWINGS, SPECIFICATIONS, PRINTS, APPARATUS, OR PARTS THEREOF, EXCEPT AS EXPRESSLY PERMITTED BY WRITTEN CONSENT OF, OR IN A WRITTEN AGREEMENT WITH, AMS. SUBMITTAL OR DISTRIBUTION TO MEET OFFICIAL REGULATORY REQUIREMENTS WILL NOT BE CONSTRUED AS PUBLICATION IN DEROGATION OF AMS'S COPYRIGHT OR OTHER INTELLECTUAL-PROPERTY OR PROPRIETARY RIGHTS.

PRE-CHECKED SET NAME

24' x 40' THRU 48' x 40'
(LOW SEISMIC)

2GO®

SITE SPECIFIC PROJECT NAME

APPROVED
DIV. OF THE STATE ARCHITECT
APP: 04-122040 PC
REVIEWED FOR
SS ☑ FLS ☑ ACS ☑ CG ☑
DATE: 11/29/2023

2022 CBC PRE-CHECK (PC) DOCUMENT
A SEPARATE PROJECT APPLICATION FOR CONSTRUCTION IS REQUIRED.

MANUFACTURER PROFESSIONAL OF RECORD ON PC

LICENSED ARCHITECT
ANDREW PATRICK HOWARD
No. C12631
Ren. 3-31-27
STATE OF CALIFORNIA

REGISTERED PROFESSIONAL ENGINEER
MINH D. PHAN
No. S3380
STRUCTURAL
STATE OF CALIFORNIA

RST#22214

11/15/2023

THESE DRAWINGS ARE PRELIMINARY AND NOT FOR CONSTRUCTION UNLESS STAMPED & SIGNED BY THE DESIGN PROFESSIONAL OF RECORD.

REVISIONS
1
2
3
4

DRAWN BY:	AA
SCALE:	AS NOTED
DATE:	MM/DD/YY
PROJECT NO:	XXXX-22

SHEET TITLE:

TYPICAL RAMP PLANS & NOTES

SHEET NUMBER:

S10.0-M

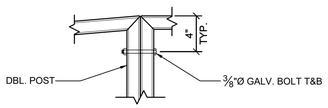

DETAIL
SCALE: 3/8"=1'-0" | 1

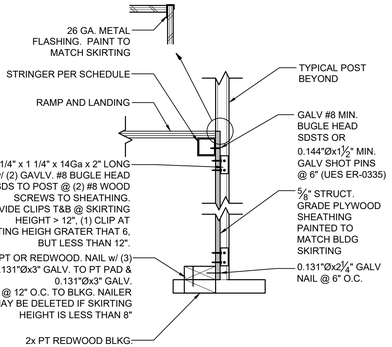

RAMP SKIRT DETAIL
SCALE: 3/8"=1'-0" | 2

SECTION 3A

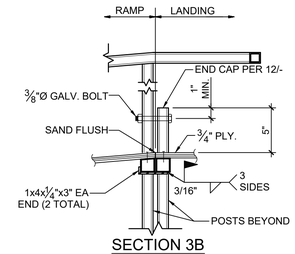

SECTION 3B

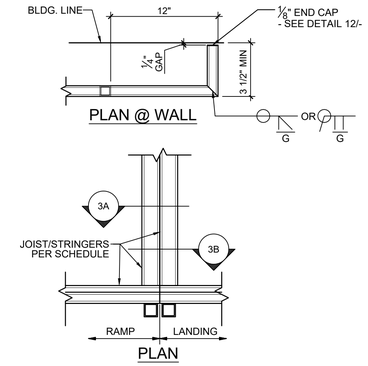

PLAN @ WALL

PLAN

RAMP TO LANDING CONNECTION DETAIL
SCALE: 3/8"=1'-0" | 3

MATERIAL STRENGTH SHALL BE 36 KSI MIN. w/ A MODULUS OF ELASTICITY OF 29,500 KSI ± 3%. ACCEPTABLE STEEL MATERIALS INCLUDE, BUT ARE NOT LIMITED TO, THE FOLLOWING:

ASTM A1011 SS GRADE 36 (Fy=36 KSI)
ASTM A653 SS GRADE 37 (Fy=37 KSI)
ASTM A1008 SS GRADE 40 (Fy=40 KSI)

MATERIAL SHALL BE GIVEN A RUST INHIBITIVE COATING.

THE MATERIAL THICKNESS OF LIGHT GAUGE STEEL MEMBERS, IN THEIR END US, SHALL MEET OR EXCEED THE MINIMUM BASE METAL THICKNESS SPECIFIED ABOVE. THE MATERIAL GAUGE DESIGNATION SHALL BE USED AS REFERENCE ONLY. SPECIFIED STEEL TUBE THICKNESSES ARE MINIMUM. THICKER TUBES MAY BE USED.

LIGHT GAUGE STEEL TUBE PROPERTIES
SCALE: 3/8"=1'-0" | 4

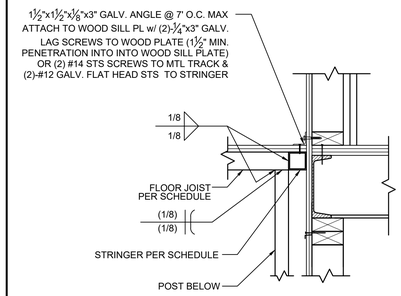

LANDING ATTACHMENT DETAIL
SCALE: 3/8"=1'-0" | 5

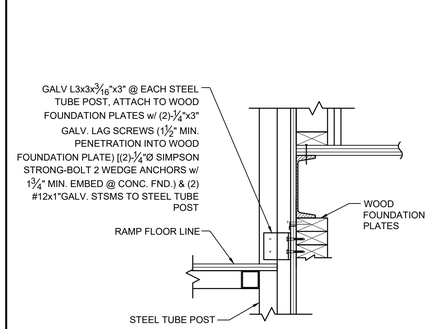

RAMP CONNECTION DETAIL
SCALE: 3/8"=1'-0" | 6

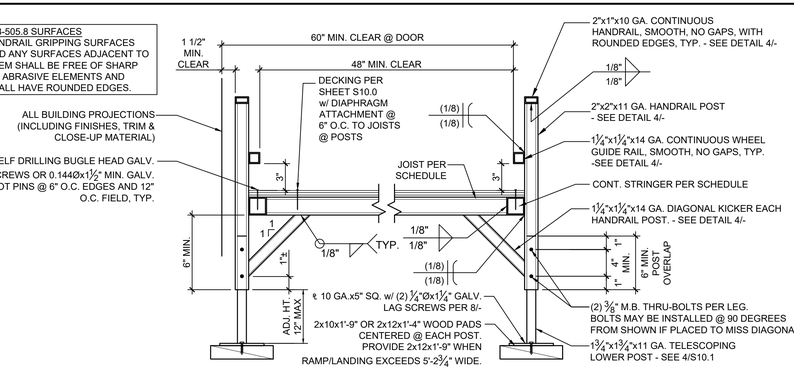

HANDRAIL & RAMP SECTION
SCALE: 3/8"=1'-0" | 7

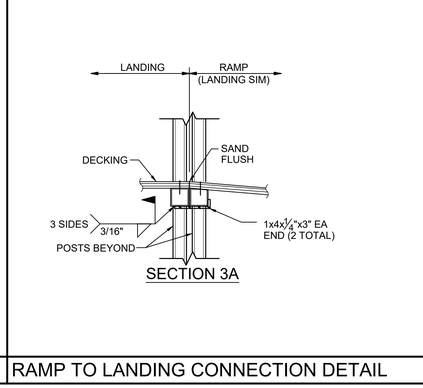

POST @ LOWER END

LOWER END POST

DETAIL
SCALE: 3/8"=1'-0" | 8

NOTE:
THE ZERO CLEARANCE RAMP LAYOUT IS AN OPTIONAL METHOD ONLY. IT MUST BE APPROVED IN WRITING, IF AMS IS TO PROVIDE THIS OPTION. ARCHITECT/OWNER MUST TAKE INTO ACCOUNT VARYING SITE CONDITIONS, GRADE CHANGES, BUILDING SEPARATION, ETC.

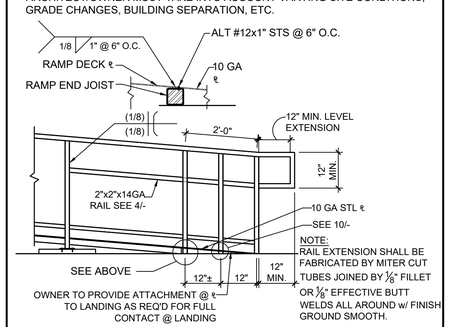

TYP. ZERO CLEARANCE RAMP DETAIL
SCALE: 3/8"=1'-0" | 9

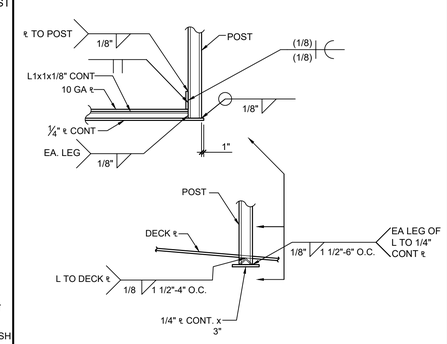

DETAIL
SCALE: 3/8"=1'-0" | 10

1. STEEL IN CONTACT WITH GROUND OR PT WOOD FOUNDATION PLATE SHOULD BE GALVANIZED.

GENERAL CONNECTION NOTES

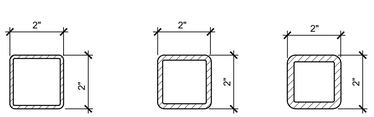

MATERIAL SHALL BE GIVEN A RUST INHIBITIVE COATING

HSS PROPERTIES
11

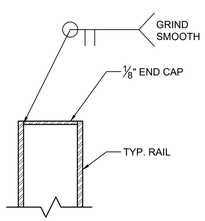

NOTE: END CAP MAY ALSO BE PLASTIC SNAP-ON CAP

END CAP DETAIL
SCALE: N.T.S. | 12

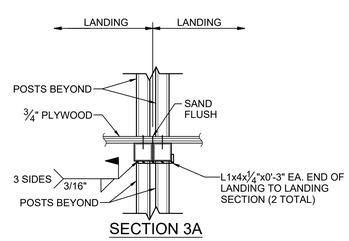

SECTION 3A

LANDING TO LANDING CONNECTION
SCALE: 3/8" = 1'-0" | 13

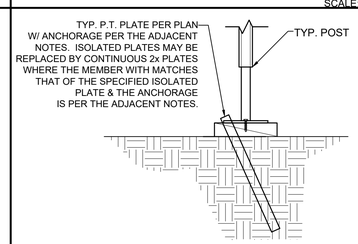

P.T. PLATE ANCHORAGE (ISOLATED PLATES)
ON SOIL, A/C OR CONCRETE PAVING
1"Ø STANDARD WEIGHT (1.315 ACTUAL O.D.) HOT DIPPED GALV. PIPE PER PLATE w/ 12" MIN.
PENETRATION MEASURED VERTICALLY BELOW SOIL OR PAVING SURFACE. DRILL PLATE 1 ⅜"Ø MAX. PIPE MAY BE DRIVEN MAX. PIPE MAY BE DRIVEN MAX 45° ANGLE TO VERTICAL.

ALTERNATE ON CONC. PAVING ONLY:
(2) SIMPSON SS (STAINLESS STEEL) STRONG-BOLT 2 THRU EA. PLATE w/ 3 ½" MIN. CONC. EMBEDMENT. SEE SHTS. S2.0-S2.3 FOR INSTALLATION REQUIREMENTS.

P.T. PLATE ANCHORAGE (CONTINUOUS PLATES)
ON SOIL, A/C OR CONCRETE PAVING
1"Ø STANDARD WEIGHT (1.315 ACTUAL O.C.) HOT DIPPED GALV. PIPE @ 4'-0" O.C. MAX. w/ 12" MIN. PENETRATION MEASURED VERTICALLY BELOW SOIL OR PAVING SURFACE. PROVIDE A MIN. OF
(2) PIPE ANCHORS FOR ANY SECTION OF PLATE. DRILL PLATE 1 ⅜"Ø MAX. PIPE MAY BE DRIVEN MAX 45° ANGLE TO VERTICAL.

ALTERNATE ON CONC. PAVING ONLY:
SIMPSON SS (STAINLESS STEEL) STRONG-BOLT 2 THRU PLATE @ 3'-0" O.C. MAX. w/ 3 ½" MIN. CONC. EMBEDMENT. PROVIDE A MIN. OF (2) ANCHORS FOR ANY SECTION OF PLATE. SEE SHTS. S2.0-S2.3 FOR INSTALLATION REQUIREMENTS.

P.T PLATE ANCHORAGE
SCALE: 3/8" = 1'-0" | 14

IDENTIFICATION STAMP
DIV. OF THE STATE ARCHITECT
APP: 04-125522 INC:
REVIEWED FOR
SS ☑ FLS ☑ ACS ☑
DATE: 08/19/2026

American Modular Systems
787 Spreckels Ave., Manteca, CA 95336
Phone (209) 825-1921 Fax (209) 825-7018
www.americanmodular.com

INTELLECTUAL-PROPERTY & PROPRIETARY RIGHTS STATEMENT
COPYRIGHT © AMERICAN MODULAR SYSTEMS (AMS)
AMS OWNS ALL COPYRIGHT AND OTHER INTELLECTUAL-PROPERTY AND PROPRIETARY RIGHTS IN THESE DRAWINGS, SPECIFICATIONS, AND THE MATERIAL CONTAINED HEREIN. CERTAIN ELEMENTS SHOWN IN THESE DOCUMENTS ARE REGISTERED TRADEMARKS OF AMS. ALL PATENTABLE MATERIALS CONTAINED IN THESE DOCUMENTS AND ORIGINATING WITH AMS WILL REMAIN THE SOLE PROPERTY OF AMS. THESE DRAWING, SPECIFICATIONS, AND THE MATERIAL CONTAINED HEREIN MAY NOT BE REPRODUCED, TRANSMITTED, COPIED, DISTRIBUTED, MODIFIED, OR OTHERWISE DISPOSED OF (DIRECTLY OR INDIRECTLY) AND MAY NOT BE USED (IN WHOLE OR IN PART) TO ASSIST IN THE CONSTRUCTION, DESIGN, OR OTHER MAKING OF, OR FOR THE PURPOSE OF FURNISHING ANY INFORMATION FOR THE CONSTRUCTION, DESIGN, OR OTHER MAKING OF, ANY BUILDINGS (MODULAR OR OTHERWISE), DRAWINGS, SPECIFICATIONS, PRINTS, APPARATUS, OR PARTS THEREOF, EXCEPT AS EXPRESSLY PERMITTED BY WRITTEN CONSENT OF, OR IN A WRITTEN AGREEMENT WITH, AMS. SUBMITTAL OR DISTRIBUTION TO MEET OFFICIAL REGULATORY REQUIREMENTS WILL NOT BE CONSTRUED AS PUBLICATION IN DEROGATION OF AMS'S COPYRIGHT OR OTHER INTELLECTUAL-PROPERTY OR PROPRIETARY RIGHTS.

PRE-CHECKED SET NAME
24' x 40' THRU 48' x 40'
(LOW SEISMIC)
2GO®

SITE SPECIFIC PROJECT NAME

APPROVED
DIV. OF THE STATE ARCHITECT
APP: 04-122040 PC
REVIEWED FOR
SS ☑ FLS ☑ ACS ☑ CG ☑
DATE: 11/29/2023

2022 CBC PRE-CHECK (PC) DOCUMENT
A SEPARATE PROJECT APPLICATION FOR CONSTRUCTION IS REQUIRED.

MANUFACTURER PROFESSIONAL OF RECORD ON PC

LICENSED ARCHITECT
MARK PATRICK GAY
No. C12631
Ren. 3-31-27
STATE OF CALIFORNIA

REGISTERED PROFESSIONAL ENGINEER
MARK D. FOSTER
No. S3380
STRUCTURAL
STATE OF CALIFORNIA
RST#22214

11/15/2023

THESE DRAWINGS ARE PRELIMINARY AND NOT FOR CONSTRUCTION UNLESS STAMPED & SIGNED BY THE DESIGN PROFESSIONAL OF RECORD.

REVISIONS
1
2
3
4

DRAWN BY:	AA
SCALE:	AS NOTED
DATE:	MM/DD/YY
PROJECT NO:	XXXX-22

SHEET TITLE:
RAMP DETAILS

SHEET NUMBER:
S10.1-M

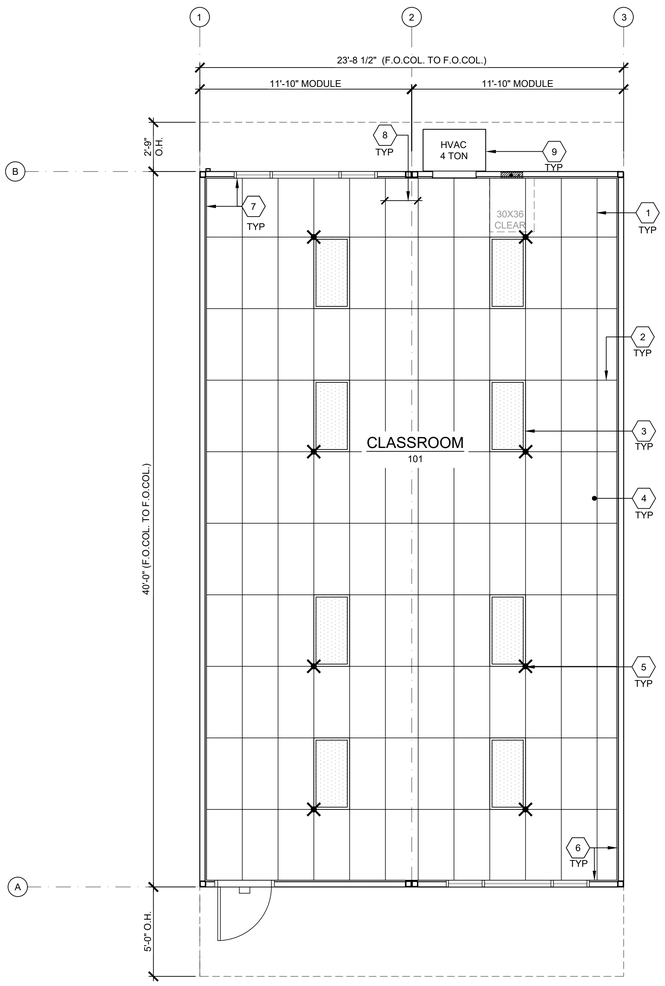

SERIAL NUMBERS:
(1) 26-315-001 A-B

REFLECTED CEILING PLAN (2) 24X40 LEFT HAND CONFIGURATION SCALE: 1/4" = 1'-0" 1

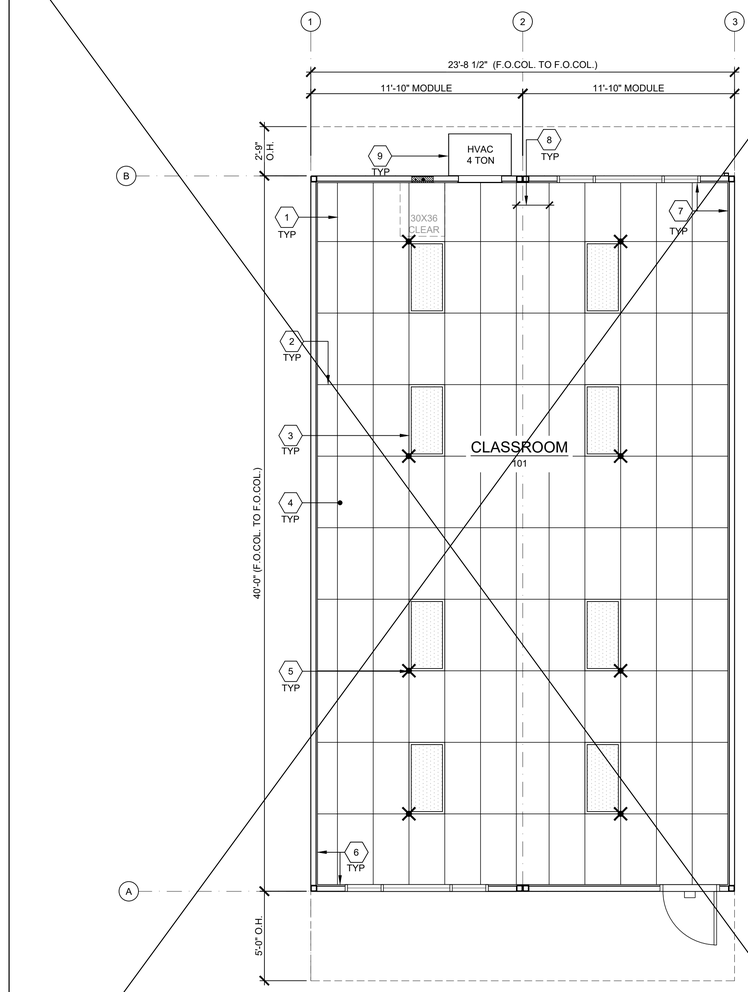

SERIAL NUMBERS:
(1) 26-314-001 A-B

REFLECTED CEILING PLAN (1) 24X40 RIGHT HAND CONFIGURATION SCALE: 1/4" = 1'-0" 1A

1. MAIN TEE RUNNER TYP. PER TABLE A, SHEET M1.7
2. CROSS TEE RUNNER TYP. PER TABLE A, SHEET M1.7
3. INTERIOR LIGHT FIXTURE, REFER TO SHEET SHEET E1.0 FOR SPEC'S ATTACHMENT PER DETAIL 7/M1.4
4. CEILING HEIGHT @ 8'-6" MIN.
5. STRUT/SPLAY WIRE ASSEMBLY, SEE 2/M1.4 FOR DETAILS
6. FIXED CEILING END, SEE DETAIL 5A/M1.4
7. FREE CEILING END, SEE DETAIL 5B/M1.4
8. CENTER SECTION THAT CROSSES MODULE LINE TO BE FIELD INSTALLED, SEE DETAIL 5C/M1.4
9. TYP. HVAC UNIT

KEY NOTES

1. ~~WHERE TWO OR MORE HVAC UNITS SERVE A COMMON SPACE, UNITS SHALL BE EQUIPPED WITH A DUCT SMOKE DETECTOR FOR AUTO SHUTDOWN. INTERCONNECT WITH FIRE ALARM SYSTEM~~.
2. AUTOMATIC SHUT-OFF IS NOT REQUIRED WHEN ALL OCCUPIED ROOMS SERVED BY THE AIR HANDLING EQUIPMENT HAVE DIRECT ACCESS TO THE EXTERIOR AND THE TRAVEL DISTANCE DOES NOT EXCEED 100 FT. PER C.M.C. 608.1 EXCEPTION #2.
3. LIGHT FIXTURES MAY BE INSTALLED ROTATED 90° FROM SHOWN TO MATCH T-GRID.
4. PC TITLE 24 HAS BEEN RUN FOR WORSE CASE OUTDOOR VENTILATION REQUIREMENTS (SEE OUTDOOR VENTILATION ON SHEET N2.0 FOR OUR OUTDOOR VENTILATION DESIGN REQUIREMENT NOTES)
6. ACCEPTANCE TESTS TO BE COMPLETED ON NEWLY INSTALLED OR REPLACEMENT OF MECHANICAL SYSTEMS BEFORE PROJECT COMPLETION PER THE CALIFORNIA ENERGY SECTION 10-103. ACCEPTANCE TESTS MUST BE PERFORMED BY A CERTIFIED ACCEPTANCE TEST TECHNICIAN (ATT). THE ACCEPTANCE TESTING PROCEDURES MUST BE REPEATED, AND DEFICIENCIES CORRECTED UNTIL THE INSTALLATION OF THE SPECIFIED SYSTEMS CONFORM AND PASS THE REQUIRED ACCEPTANCE CRITERIA. COMPLETED NRCA FORMS SHALL BE SUBMITTED TO THE PROJECT INSPECTOR AND THE DISTRICT.

GENERAL NOTES

MEP COMPONENT ANCHORAGE NOTES

ALL MECHANICAL, PLUMBING, AND ELECTRICAL COMPONENTS SHALL BE ANCHORED AND INSTALLED PER THE DETAILS ON THE DSA APPROVED CONSTRUCTION DOCUMENTS. THE FOLLOWING COMPONENTS SHALL BE ANCHORED OR BRACED TO MEET THE FORCE AND DISPLACEMENT REQUIREMENTS PRESCRIBED IN THE 2022 CBC, SECTIONS 1617A.1.18 THROUGH 1617A.1.26 AND ASCE 7-16 CHAPTER 13, 26 AND 30.

1. ALL PERMANENT EQUIPMENT AND COMPONENTS.
2. TEMPORARY, MOVABLE OR MOBILE EQUIPMENT THAT IS PERMANENTLY ATTACHED (E.G. HARD WIRED) TO THE BUILDING UTILITY SERVICES SUCH AS ELECTRICITY, GAS OR WATER. "PERMANENTLY ATTACHED" SHALL INCLUDE ALL ELECTRICAL CONNECTIONS EXCEPT PLUGS FOR110/220 VOLT RECEPTACLES HAVING A FLEXBLE CABLE.
3. TEMPORARY, MOVABLE OR MOBILE EQUIPMENT WHICH IS HEAVIER THAN 400 POUNDS OR HAS A CENTER OF MASS LOCATED 4 FEET OR MORE ABOVE THE ADJACENT FLOOR OR ROOF LEVEL THAT DIRECTLY SUPPORT THE COMPONENT IS REQUIRED TO BE RESTRAINED IN A MANNER APPROVED BY DSA.

THE FOLLOWING MECHANICAL AND ELECTRICAL COMPONENTS SHALL BE POSITIVELY ATTACHED TO THE STRUCTURE BUT NEED NOT DEMONSTRATE DESIGN COMPLIANCE WITH THE REFERENCE NOTED ABOVE. THESE COMPONENTS SHALL HAVE FLEXIBLE CONNECTIONS PROVIDED BETWEEN THE COMPONENT AND ASSOCIATED DUCTWORK, PIPING, AND CONDUIT. FLEXIBLE CONNECTIONS MUST ALLOW MOVEMENT IN BOTH TRANSVERSE AND LONGITUDINAL DIRECTIONS:

A. COMPONENTS WEIGHING LESS THAN 400 POUNDS AND HAVE A CENTER OF MASS LOCATED 4 FEET OR LESS ABOVE THE ADJACENT FLOOR OR ROOF LEVEL THAT DIRECTLY SUPPORT THE COMPONENT.
B. COMPONENTS WEIGHING LESS THAN 20 POUNDS, OR IN THE CASE OF DISTRIBUTED SYSTEMS, LESS THAN 5 POUNDS PER FOOT, WHICH ARE SUSPENDED FROM A ROOF OR FLOOR OR HUNG FROM A WALL.

THE ANCHORAGE OF ALL MECHANICAL, ELECTRICAL AND PLUMBING COMPONENTS SHALL BE SUBJECT TO THE APPROVAL OF THE DESIGN PROFESSIONAL IN GENERAL RESPONSIBLE CHARGE OR STRUCTURAL ENGINEER DELEGATED RESPONSIBILITY AND ACCEPTANCE BY DSA. THE PROJECT INSPECTOR WILL VERIFY THAT ALL COMPONENTS AND EQUIPMENT HAVE BEEN ANCHORED IN ACCORDANCE WITH THE ABOVE REQUIREMENTS.

PIPING, DUCTWORK, AND ELECTRICAL DISTRIBUTION SYSTEM BRACING NOTES

PIPING, DUCTWORK, AND ELECTRICAL DISTRIBUTION SYSTEMS SHALL BE BRACED TO COMPLY WITH THE FORCES AND DISPLACEMENTS PRESCRIBED IN ASCE 7-16 SECTION 13.3 AS DEFINED IN ASCE 7-16 SECTION 13.6.5, 13.6.6, 13.6.7, 13.6.8; AND 2022 CBC, SECTIONS 1617A.1.24, 1617A.1.25 AND 1617A.1.26.

THE METHOD OF SHOWING BRACING AND ATTACHMENTS TO THE STRUCTURE FOR THE IDENTIFIED DISTRIBUTION SYSTEM ARE AS NOTED BELOW. WHEN BRACING AND ATTACHMENTS ARE BASED ON A PRE-APPROVED INSTALLATION GUIDE (E.G., OSHPD OPM FOR 2013 CBC OR LATER), COPIES OF THE BRACING SYSTEM INSTALLATION GUIDE OR MANUAL SHALL BE AVAILABLE ON THE JOBSITE PRIOR TO THE START OF AND DURING THE HANGING AND BRACING OF THE DISTRIBUTION SYSTEMS. THE STRUCTURAL ENGINEER OF RECORD SHALL VERIFY THE ADEQUACY OF THE STRUCTURE TO SUPPORT THE HANGER AND BRACE LOADS.

MECHANICAL PIPING (MP), MECHANICAL DUCTS (MD), PLUMBING PIPING (PP), ELECTRICAL DISTRIBUTION SYSTEMS (E):

MP ☒ MD ☒ PP ☒ E ☒ OPTION 1: DETAILED ON THE APPROVED DRAWINGS WITH PROJECT SPECIFIC NOTES AND DETAILS.

MP ☐ MD ☐ PP ☐ E ☐ OPTION 2: SHALL COMPLY WITH THE APPLICABLE OSHPD PRE-APPROVAL (OPM #) #_____.

NOT USED

NOT USED

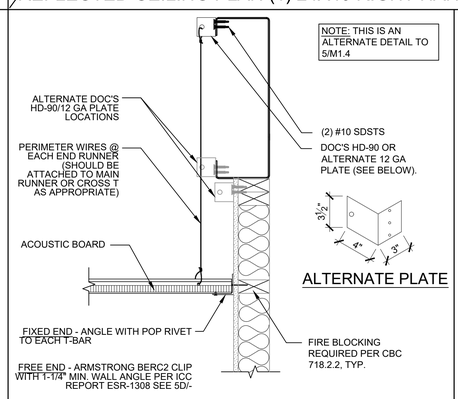

SUSPENDED CEILING AT ATTACHMENT DETAIL

BUILDING SIZE SCHEDULE			
BUILDING SIZE (FT)	TOTAL # OF 12'-0" WIDE MODULES	TOTAL # OF CENTER MODULES	TOTAL FNDN WIDTH
☒ 24'x40'	2	0	23'-8"
☐ 36'x40'	3	1	35'-6"
☐ 48'x40'	4	2	47'-4"

NOTES:

1. TOTAL BUILDING WIDTH INCLUDES 1/4" PER MODULE CONSTRUCTION TOLERANCE PER FOUNDATION SHEET S2.1.

BUILDING SIZE SCHEDULE

MEP COMPONENT ANCHORAGE NOTES

IDENTIFICATION STAMP
DIV. OF THE STATE ARCHITECT
APP: 04-125522 INC:
REVIEWED FOR
SS ☑ FLS ☑ ACS ☑
DATE: 08/19/2026

American Modular Systems
787 Spreckels Ave., Manteca, CA 95336
Phone (209) 825-1921 Fax (209) 825-7018
www.americanmodular.com

INTELLECTUAL-PROPERTY & PROPRIETARY RIGHTS STATEMENT
COPYRIGHT © AMERICAN MODULAR SYSTEMS (AMS)
AMS OWNS ALL COPYRIGHT AND OTHER INTELLECTUAL-PROPERTY AND PROPRIETARY RIGHTS IN THESE DRAWINGS, SPECIFICATIONS, AND THE MATERIAL CONTAINED HEREIN. CERTAIN ELEMENTS SHOWN IN THESE DOCUMENTS ARE REGISTERED TRADEMARKS OF AMS. ALL PATENTABLE MATERIALS CONTAINED IN THESE DOCUMENTS AND ORIGINATING WITH AMS WILL REMAIN THE SOLE PROPERTY OF AMS. THESE DRAWING, SPECIFICATIONS, AND THE MATERIAL CONTAINED HEREIN MAY NOT BE REPRODUCED, TRANSMITTED, COPIED, DISTRIBUTED, MODIFIED, OR OTHERWISE DISPOSED OF (DIRECTLY OR INDIRECTLY) AND MAY NOT BE USED (IN WHOLE OR IN PART) TO ASSIST IN THE CONSTRUCTION, DESIGN, OR OTHER MAKING OF, OR FOR THE PURPOSE OF FURNISHING ANY INFORMATION FOR THE CONSTRUCTION, DESIGN, OR OTHER MAKING OF, ANY BUILDINGS (MODULAR OR OTHERWISE), DRAWINGS, SPECIFICATIONS, PRINTS, APPARATUS, OR PARTS THEREOF, EXCEPT AS EXPRESSLY PERMITTED BY WRITTEN CONSENT OF, OR IN A WRITTEN AGREEMENT WITH, AMS. SUBMITTAL OR DISTRIBUTION TO MEET OFFICIAL REGULATORY REQUIREMENTS WILL NOT BE CONSTRUED AS PUBLICATION IN DEROGATION OF AMS'S COPYRIGHT OR OTHER INTELLECTUAL-PROPERTY OR PROPRIETARY RIGHTS.

PRE-CHECKED SET NAME
24' x 40' THRU 48' x 40'
(LOW SEISMIC)
2GO®

SITE SPECIFIC PROJECT NAME
AMS STOCKPILE
(2) 24'-X40' BUILDING

MANUFACTURER PROFESSIONAL OF RECORD
LICENSED ARCHITECT
PATRICK CONNOR
No. C12631
Ren. 3-31-27
STATE OF CALIFORNIA

THESE DRAWINGS ARE PRELIMINARY AND NOT FOR CONSTRUCTION UNLESS STAMPED & SIGNED BY THE DESIGN PROFESSIONAL OF RECORD.

REVISIONS
1
2
3
4

DRAWN BY:	RA
SCALE:	AS NOTED
DATE:	14/04/2026
PROJECT NO:	2020-26

SHEET TITLE:
TYPICAL
REFLECTED CEILING
PLAN

SHEET NUMBER:
M1.0-M

American Modular Systems

AMS-STOCKPILE

2 ~~(3)~~30'x32' CLASSROOM

SERIAL NUMBERS:
~~(1) 26-314-002 A-C~~
(1) 26-315-002 A-C
(1) 26-315-003 A-C

APPLICABLE CODES

PARTIAL LIST OF APPLICABLE CODES AS OF JANUARY 1, 2023

- 2022 CALIFORNIA ADMINISTRATIVE CODE (CAC) - PART 1, TITLE 24, CCR)
- 2022 CALIFORNIA BUILDING CODE (CBC), VOLUME 1 & 2 - (PART 2, TITLE 24 CCR) BASED ON THE 2021 INTERNATIONAL BUILDING CODE WITH 2022 CALIFORNIA AMENDMENTS
- 2022 CALIFORNIA ELECTRICAL CODE (CEC) - (PART 3, TITLE 24, CCR) BASED ON THE 2020 NATIONAL ELECTRIC CODE WITH 2022 CALIFORNIA AMENDMENTS
- 2022 CALIFORNIA MECHANICAL CODE (CMC) - (PART 4, TITLE 24, CCR) BASED ON THE 2021 IAPMO UNIFORM MECHANICAL CODE WITH 2022 CALIFORNIA AMENDMENTS
- 2022 CALIFORNIA PLUMBING CODE (CPC) - (PART 5, TITLE 24, CCR) BASED ON THE 2021 IAPMO UNIFORM PLUMBING CODE WITH 2022 CALIFORNIA AMENDMENTS
- 2022 CALIFORNIA ENERGY CODE (CEC) - (PART 6, TITLE 24, CCR)
- 2022 CALIFORNIA FIRE CODE (CFC) - (PART 9, TITLE 24, CCR) BASED ON THE 2021 INTERNATIONAL FIRE CODE WITH 2022 CALIFORNIA AMENDMENTS
- 2022 CALIFORNIA GREEN BUILDING CODE (CGC) - (PART 11, TITLE 24, CCR)
- 2022 CALIFORNIA REFERENCED STANDARDS CODE (PART 12, TITLE 24, CCR)
- ACCESSIBILITY TO MEET 2025 CBC

PARTIAL LIST OF APPLICABLE STANDARDS

• NFPA 13	AUTOMATIC SPRINKLER SYSTEM	2022 EDITION
• NFPA 14	STANDPIPE AND HOSE SYSTEMS	2019 EDITION
• NFPA 17	DRY CHEMICAL EXTINGUISHING SYSTEMS	2021 EDITION
• NFPA 17A	WET CHEMICAL EXTINGUISHING SYSTEMS	2021 EDITION
• NFPA 20	STATIONARY PUMPS	2019 EDITION
• NFPA 24	PRIVATE FIRE MAINS	2019 EDITION
• NFPA 72	NATIONAL FIRE ALARM AND SIGNALING CODE (CALIFORNIA AMENDED) (NOTE: SEE UL, STANDARD 1971 FOR "VISUAL DEVICES")	2022 EDITION
• NFPA 253	CRITICAL RADIANT FLUX OF FLOOR COVERING SYSTEMS	2019 EDITION
• NFPA 2001	CLEAN AGENT FIRE EXTINGUISHING SYSTEMS (CA AMMENDED)	2018 EDITION

GENERAL NOTES

1. SUBSTITUTION OF PRODUCTS OR PROCESSES WHICH CHANGE THE STRUCTURAL SAFETY, FIRE & LIFE-SAFETY, OR ACCESSIBILTY OF THIS BUILDING SHALL BE SUBMITTED TO THE DSA AS AN ADDENDUM OR CONSTRUCTION CHANGE DOCUMENT.
2. PC BUILDING APPROVED ONLY FOR OCCUPANCY "E" OR "B".
3. PC BUILDING EXITING IS BASED ON THE USE OR OCCUPANCY AND WILL BE REVIEWED AS SITE SPECIFIC.
4. PC BUILDINGS LOCATED IN FIRE HAZARD SEVERITY ZONES PER WILDLAND URBAN INTERFACE FIRE AREAS (WUI) SHALL CONFORM TO CBC CHAPTER 7A.
5. AUTOMATIC FIRE SPRINKLER REQUIREMENTS ARE NOT INCLUDED IN THIS PC APPROVAL.
6. THIS PC PLAN SHALL NOT BE USED TO HOUSE "ROOMS OR AREAS WITH SPECIAL HAZARDS" SUCH AS LABORATORIES, VOCATIONAL SHOPS AND OTHER SUCH AREAS NOT CLASSIFIED AS GROUP H, LOCATED IN GROUP E OCCUPANCIES.
7. A SEPARATE DSA APPLICATION NUMBER IS REQUIRED FOR DESIGN & INSTALLATION OF SOLAR PANEL SYSTEMS, ITS ANCHORAGE & SUPPORT STRUCTURE. (NOTE: SOLAR PANEL SYSTEM WEIGHT IS INCLUDED IN BUILDING DESIGN) SOLAR SYSTEM SUBMITTALS SHALL NOT BE SUBMITTED AS AN OVER-THE-COUNTER SUBMITTAL.
8. IF THE STRUCTURE IS LOCATED IN AN AREA WITH LIQUEFIABLE SOIL OR SITE CLASS F, OVER-THE-COUNTER SUBMITTAL IS NOT ALLOWED AND REGULAR PROJECT SUBMITTAL IS REQUIRED. IF THE SITE IS NOT IN A MAPPED LIQUEFACTION HAZARD ZONE, IT MAY BE PRESUMED THAT NO LIQUEFACTION HAZARD EXISTS ON THAT SITE UNLESS A SITE-SPECIFIC GEOTECHNICAL REPORT IDENTIFIES SUCH HAZARD.
9. THIS PC BUILDING IS NOT DESIGNED FOR FLOOD HAZARD AREAS.
10. THE PLACEMENT OF THE PC BUILDING(S) ON OR ADJACENT TO SLOPES SHALL COMPLY WITH THE 'FOUNDATION CLEARANCES FROM SLOPES' SPECIFICATIONS FOUND ON SHEET N2.0 OF THESE DRAWINGS.
11. PC BUILDING SHALL NOT BE PLACED OR BE RELOCATED IN AREAS HAVING A NOISE CONTOUR GREATER THAN OR EQUAL TO 65 CNEL, OR IN AREAS EXPOSED TO A NOISE LEVEL OF 65 dB L_{eq}-1-hr DURING ANY HOUR OF OPERATION WHEN NOISE
12. CONTOURS ARE NOT READILY AVAILABLE, AS SPECIFIED IN CALGREEN CODE, SECTION 5.507.4.1 & 5.507.4.1.1.
13. THIS PC BUILDING IS NOT DESIGNED FOR SNOW LOADS.
14. THIS PC BUILDING IS NOT DESIGNED FOR ICE LOADS.
15. BUILDING SHALL BE MANUFACTURERD IN COMPLIANCE WITH CFC CHAPTER 33 FOR FIRE SAFETY DURING CONSTRUCTION.
16. SUBMITTAL AND APPROVAL OF A GEOHAZARD REPORT BY THE CALIFORNIA GEOLOGICAL SURVEY (CGS) IS NOT REQUIRED FOR SINGLE-STORY MODULAR BUILDINGS PROVIDED THAT THEY DO NOT EXCEED 4,000 SUQARE FEET IN PLAN AREA AND ARE NOT LOCATED WITHIN STATE OR LOCAL GEOLOGICAL HAZARD ZONES IN ACCORDANCE WITH IR A-4, SECTION 3.2.1.
17. THE DESIGN PROFESSIONAL HAS EXEMPTED RAMPS FROM SPECIAL INSPECTION REQUIREMENTS FOR MATERIAL IDENTIFICATION AND STRUCTURAL WELDING. RAMP SHALL NOT BE MODIFIED NOR HAVE SHIMS ADDED CAUSING THE DISTANCE BETWEEN THE HIGHEST RAMP WALKING SURFACE AND THE ADJACENT GRADE TO BE MORE THAN 30 INCHES. IF THIS CONDITION IS NOT MET, STRUCTURAL TESTING AND/OR INSPECTION WILL BE REQUIRED TO VERIFY MATERIALS AND STRUCTURAL WELDING. THIS APPLIES TO SCOPES OF WORK INCLUDING NEW CONSTRUCTION, ALTERATION, OR RELOCATION OF THE RAMP.
18. ACCEPTANCE TESTS BE COMPLETED ON NEWLY INSTALLED OR REPLACEMENT OF LIGHTING CONTROLS, MECHANICAL SYSTEMS, FENESTRATION, AND PROCESS EQUIPMENT BEFORE PROJECT COMPLETION PER THE CALIFORNIA ENERGY CODE SECTION 10-103. ACCEPTANCE TESTS MUST BE PERFORMED BY A CERTIFIED ACCEPTANCE TEST TECHNICIAN (ATT). THE ACCEPTANCE TESTING PROCEDURES MUST BE REPEATED, AND DEFICIENCIES CORRECTED UNTIL THE INSTALLATION OF THE SPECIFIED SYSTEMS CONFORM AND PASS THE REQUIRED ACCEPTANCE CRITERIA. COMPLETED NRCA FORMS SHALL BE SUBMITTED TO THE PROJECT INSPECTOR AND THE DISTRICT.

© 2023 BY AMERICAN MODULAR SYSTEMS, INC.

ALL OF THE DRAWINGS AND DETAILS CONTAINED IN THIS PACKAGE ARE THE INTELLECTUAL PROPERTY OF AMERICAN MODULAR SYSTEMS, INC (AMS) AND MAY NOT BE USED FOR CONSTRUCTION OR DESIGN BY ANOTHER ENTITY WITHOUT THE EXPRESS WRITTEN PERMISSION OF AMS.

COPYRIGHT: © 2023 BY AMERICAN MODULAR SYSTEMS, INC. ALL RIGHTS RESERVED. NO PART OF THIS DOCUMENT MAY BE REPRODUCED OR TRANSMITTED IN ANY FORM OR BY ANY MEANS, ELECTRONIC, MECHANICAL, PHOTOCOPYING, RECORDING, OR OTHERWISE, WITHOUT THE PRIOR WRITTEN PERMISSION OF AMERICAN MODULAR SYSTEMS, INC. CERTAIN ELEMENTS CONTAINED IN THESE DOCUMENTS ARE REGISTERED TRADEMARKS. ALL PATENTABLE MATERIALS CONTAINED IN THESE DOCUMENTS AND ORIGINATING WITH AMERICAN MODULAR SYSTEMS, INC. SHALL REMAIN THE SOLE PROPERTY OF AMERICAN MODULAR SYSTEMS, INC. SUBMITTAL OR DISTRIBUTION TO MEET OFFICIAL REGULATORY REQUIREMENTS WILL NOT BE CONSTRUED AS PUBLICATION IN DEROGATION OF AMERICAN MODULAR SYSTEM, INC.'S COPYRIGHT OR OTHER RESERVED INTELLECTUAL PROPERTY RIGHTS AND INTERESTS.

BUILDING DATA

OCCUPANCY	E ~~OR B (CLASSROOM USE FOR COLLEGE), OR A (CATEGORY I/II)~~
TYPE OF CONSTRUCTION	V-B
WIND LOAD ASCE 7-16 SECTION 28.5.3 SIMPLIFIED PROCEDURE	V = 99 MPH BASIC WIND SPEED EXPOSURE = C INTERNAL PRESSURE COEFF., $GC_{P,I}$ = ±0.18 RISK CATEGORY II K_{ZT} = 1.00 λ = 1.21 ROOF ANGLE = 1.2°
ICE LOAD	NOT CONSIDERED (SEE GENERAL NOTE #15 THIS SHEET)
SNOW LOAD	NOT CONSIDERED (SEE GENERAL NOTE #14 THIS SHEET)
ROOF LIVE LOAD (MAX PSF)	20
FLOOR LIVE LOAD (PSF)	☐ 50 ☒ 50+15 ☐ 100
RAMP LIVE LOAD (MAX. PSF)	100 (1,000# CONCENTRATED LD)
DESIGN DEAD LOADS (MAX PSF)	18.0 ROOF - 12.0 FLOOR - 10.0 EXT. WALLS
ROOF SOLAR PANELS	3.0 PSF INCLUDED IN ROOF DESIGN DEAD LOADS ABOVE (SEE GENERAL NOTE #7 THIS SHEET)
FIRE SPRINKLER SYSTEM DESIGN WT.	NOT CONSIDERED (SEE GENERAL NOTES #5 THIS SHEET)
ALLOWABLE SOIL PRESSURE (PSF)	1,000 FOR WOOD FOUNDATION
FLOOD HAZARD AREA	NO (SEE GENERAL NOTE #11 THIS SHEET)
RAIN INTENSITY (IN/HR)	3"
BUILDING AREA (SQ. FT.)	960 SF
CLIMATE ZONE GROUP	☐ A (1,16) ☐ B (2-5) ☒ C (6-13) ☐ D (14,15) (REFER TO EN.1 FOR REQUIREMENTS)
MODULES	LIGHT MODULAR STEEL MOMENT FRAMES PER CBC 2212A
SYSTEM	12'x40' MODULES (2 MODULES MINIMUM - 4 MODULES MAX)
FOUNDATION TYPE	WOOD

SITE-SPECIFIC OPTIONS

FLOOR DECK	1⅛" PLYWOOD SHTG.			
WALL STUDS	WOOD			
EXTERIOR WALL FINISH	☒ DURATEMP 303	☐ LAP SIDING		
HVAC	☐ INTERIOR FLOOR MOUNTED	☒ EXTERIOR WALL MOUNTED		
ROOFING	3" x 20 GA. STANDING SEAM			
ROOF PITCH	☒ SINGLE PITCH	☐ DUAL PITCH		
ROOF DIAPHRAGM	STEEL X-BRACING			
FRONT OVERHANG	☐ NO	☒ YES - LENGTH: 5'-0"		
REAR OVERHANG	☐ NO	☒ YES - LENGTH: 2'-9"		
RAMP(S)	☐ NO	☒ YES (SEE SHEET S10.0)		
LIQUEFIABLE SOILS	☒ NO	☐ YES (SEE GENERAL NOTE #10 THIS SHEET)		
MAPPED GEOHAZARD ZONE	☒ NO	☐ YES (AS DEFINED BY PC-6 SECTION 1.8)		
GEOHAZARD REPORT	☒ NO	☐ YES		
IF YES	GEOTECHNICAL FIRM:			
	REPORT #:		REPORT DATE:	
GEOTECHNICAL REPORT	☒ NO	☐ YES		
IF YES	GEOTECHNICAL FIRM:			
	REPORT #:		REPORT DATE:	

☐ THIS SHEET CONTAINS DESIGN OPTION BOXES AVAILABLE FOR SELECTION BASED ON SITE SPECIFIC REQUIREMENTS.

REQUIRED PV SYSTEM SIZE (kW)

CLIMATE ZONE GROUP	BUILDING SIZE			
	30'x32'	40'x32'	50'x32'	60'x32'
	APPROXIMATE CONDITIONED FLOOR AREA			
	960	1280	1600	1920
☐ A (1 & 16)	NONE	NONE	NONE	NONE
☐ B (2 - 5)	NONE	NONE	NONE	NONE
☒ C (6 - 13)	NONE	NONE	NONE	NONE
☐ D (14 & 15)	NONE	NONE	NONE	2.8

SEE SHEET TS2 FOR SHEET INDEX

SITE SPECIFIC WIND VALUES

SITE SPECIFIC BASIC WIND SPEED = 96 MPH WIND EXPOSURE = C

SITE SPECIFIC SEISMIC VALUES

SITE SPECIFIC S_S = 0.755 SITE SPECIFIC S_1 = 0.278 SITE CLASS = D- DEFAULT

SITE SPECIFIC S_{DS} = 0.604 SITE SPECIFIC S_{D1} = N/A

NOTE: SITE SHALL BE SITE CLASS "D" (DEFAULT) IF NO SOILS REPORT

PC BUILDING SEISMIC DESIGN CRITERIA

I_e = 1.0 T = 0.231s R = 3.5 (OMF) RISK CATEGORY II
Ω_O = 3.0 C_d = 3.0 ρ = 1.0 SEISMIC DESIGN CATEGORY: D (S_1 < 0.75) E (S_1 > 0.75)

MAXIMUM STORY DRIFT RATIO = 2.0% (I.E. MAX DRIFT = 0.020 x THE HEIGHT UNDER CONSIDERATION.
LATERAL FORCE RESISTING SYSTEM: LIGHT MODULAR STEEL MOMENT FRAMES PER 2212A
ANALYSIS PROCEDURE: EQUIVALENT LATERAL FORCE
SEISMIC RESPONSE COEFFICIENT IS BASED ON SHORT PERIOD RESPONSE Sds

NOTE:
PER CBC 1613A.2.3,
S_{DS} (S_{MS}) SHALL NOT BE TAKEN AS LESS THAN S_{D1} (S_{M1})

NOTE:
FOR ALL LATERAL LOAD CASES, COMPONENTS AND CLADDING DESIGNED FOR:
S_{DS} = 1.95

☒ NO SOILS REPORT - ASSUMED SITE CLASS "D" DEFAULT

S_s = 2.440 MAX (SITE) F_a = 1.2 S_{DS} = 1.95 (SITE)
1.708 (DESIGN)* 1.37 (DESIGN)*

S_1 = 1.213 MAX (SITE & DESIGN) F_v = 1.7 S_{D1} = 1.37 MAX (SITE & DESIGN) C_S = 0.393 W (DESIGN)*

☐ WITH SOILS REPORT - SITE CLASS "A", "B" OR "D"

NOTE: GROUND MOTION HAZARD ANALYSIS IS NOT REQUIRED WHERE THE VALUE OF THE PARAMETERS S_{M1} IS INCREASED BY 50% FOR ALL APPLICATIONS OF S_{M1} (ASCE 7-16 w/SUPPLEMENT #3, SECTION 11.4.8, EXCEPTION1)

S_s = 2.932 MAX (SITE) F_a = 1.0 S_{DS} = 1.95 MAX (SITE)
2.050 (DESIGN)* 1.37 (DESIGN)*

S_1 = 1.213 MAX (SITE & DESIGN) F_v = 1.7 S_{D1} = 1.37 MAX (SITE & DESIGN) C_S = 0.393 W (DESIGN)*

☐ WITH SOILS REPORT - SITE CLASS "C"

S_s = 2.440 MAX (SITE) F_a = 1.2 S_{DS} = 1.95 (SITE)
1.708 (DESIGN)* 1.37 (DESIGN)*

S_1 = 1.473 MAX (SITE & DESIGN) F_v = 1.4 S_{D1} = 1.37 MAX (SITE & DESIGN) C_S = 0.393 W (DESIGN)*

☐ WITH SOILS REPORT - SITE CLASS "E"

NOTE: GROUND MOTION HAZARD ANALYSIS IS NOT REQUIRED WHERE THE EQUIVALENT LATERAL FORCE PROCEDURE IS USED FOR DESIGN AND THE VALUE OF C_S IS DETERMINED BY EQ (12.8-2) FOR ALL VALUES OF 7 (ASCE 7-16 w/SUPPLEMENT #3, SECTION 11.4.8, EXCEPTION 2)

S_s = 1.718 MAX (SITE) F_a = 1.2 S_{DS} = 1.37 (SITE)
1.718 (DESIGN) 1.37 (DESIGN)

S_1 = 1.031 MAX (SITE & DESIGN) F_v = 2.0 S_{D1} = 1.37 MAX (SITE & DESIGN) C_S = 0.393 W (DESIGN)

*PER ASCE 7-16, SECTION 12.8.1.3:
THE VALUE OF C_S AND F_V ARE PERMITTED TO BE CALCULATED USING A VALUE OF S_{DS} EQUAL TO 1.0, BUT NOT LESS THAN 70% OF S_{DS} AS DEFINED IN SECTION 11.4.5, PROVIDED THAT ALL OF THE FOLLOWING CRITERIA ARE MET:

1. STRUCTURE DOES NOT HAVE IRREGULARITIES;
2. STRUCTURE DOES NOT EXCEED FIVE (5) STORIES ABOVE THE LOWER OF THE BASE OR GRADE PLANE;
3. STRUCTURE HAS A FUNDAMENTAL PERIOD, T, THAT DOES NOT EXCEED 0.5 SECONDS;
4. STRUCTURE MEETS REQUIREMENTS FOR REDUNDANCY FACTOR, ρ, TO BE TAKEN AS 1.0;
5. SITE SOIL PROPERTIES ARE NOT CLASSIFIED AS SITE CLASS 'E' OR 'F';
6. STRUCTURE IS CLASSIFIED AS RISK CATEGORY II.

HVAC SCHEDULE

BUILDING SIZE & CLIMATE ZONE GROUP (ZONE)	# OF HVAC			
	3½ TON (BARD)	4 TON (BARD)	4 TON (SYSTEM AIR)	5 TON (SYTEM AIR)
☐ 30'x32' GROUP A (1,16)	1			
☐ 30'x32' GROUP B (2-5)	1			
☒ 30'x32' GROUP C (6-13)	1			
☐ 30'x32' GROUP D (14,15)	1			
☐ 40'x32' GROUP A (1,16)	1			
☐ 40'x32' GROUP B (2-5)	1			
☐ 40'x32' GROUP C (6-13)			1	
☐ 40'x32' GROUP D (14,15)			1	
☐ 50'x32' GROUP A (1,16)	2			
☐ 50'x32' GROUP B (2-5)	2			
☐ 50'x32' GROUP C (6-13)	2			
☐ 50'x32' GROUP D (14,15)	2			
☐ 60'x32' GROUP A (1,16)	2			
☐ 60'x32' GROUP B (2-5)	2			
☐ 60'x32' GROUP C (6-13)	2			
☐ 60'x32' GROUP D (14,15)	2			

IDENTIFICATION STAMP
DIV. OF THE STATE ARCHITECT
APP: 04-125522 INC:
REVIEWED FOR
SS ☑ FLS ☑ ACS ☑
DATE: 08/19/2026

American Modular Systems
787 Spreckels Ave., Manteca, CA 95336
Phone (209) 825-1921 Fax (209) 825-7018
www.americanmodular.com

INTELLECTUAL-PROPERTY & PROPRIETARY RIGHTS STATEMENT
COPYRIGHT © AMERICAN MODULAR SYSTEMS (AMS)
AMS OWNS ALL COPYRIGHT AND OTHER INTELLECTUAL-PROPERTY AND PROPRIETARY RIGHTS IN THESE DRAWINGS, SPECIFICATIONS, AND THE MATERIAL CONTAINED HEREIN. CERTAIN ELEMENTS SHOWN IN THESE DOCUMENTS ARE REGISTERED TRADEMARKS OF AMS. ALL PATENTABLE MATERIALS CONTAINED IN THESE DOCUMENTS AND ORIGINATING WITH AMS WILL REMAIN THE SOLE PROPERTY OF AMS. THESE DRAWING, SPECIFICATIONS, AND THE MATERIAL CONTAINED HEREIN MAY NOT BE REPRODUCED, TRANSMITTED, COPIED, DISTRIBUTED, MODIFIED, OR OTHERWISE DISPOSED OF (DIRECTLY OR INDIRECTLY) AND MAY NOT BE USED (IN WHOLE OR IN PART) TO ASSIST IN THE CONSTRUCTION, DESIGN, OR OTHER MAKING OF, OR FOR THE PURPOSE OF FURNISHING ANY INFORMATION FOR THE CONSTRUCTION, DESIGN, OR OTHER MAKING OF, ANY BUILDINGS (MODULAR OR OTHERWISE), DRAWINGS, SPECIFICATIONS, PRINTS, APPARATUS, OR PARTS THEREOF, EXCEPT AS EXPRESSLY PERMITTED BY WRITTEN CONSENT OF, OR IN A WRITTEN AGREEMENT WITH, AMS. SUBMITTAL OR DISTRIBUTION TO MEET OFFICIAL REGULATORY REQUIREMENTS WILL NOT BE CONSTRUED AS PUBLICATION IN DEROGATION OF AMS'S COPYRIGHT OR OTHER INTELLECTUAL-PROPERTY OR PROPRIETARY RIGHTS.

PRE-CHECKED SET NAME

30' x 32' THRU 60' x 32'

2GO®

SITE SPECIFIC PROJECT NAME

AMS STOCKPILE
(3) 30'x32' BUILDINGS

MANUFACTURER PROFESSIONAL OF RECORD

LICENSED ARCHITECT
RAMON PATRICK GUNNELL
No. C12631
Ren. 3-31-27
STATE OF CALIFORNIA

THESE DRAWINGS ARE PRELIMINARY AND NOT FOR CONSTRUCTION UNLESS STAMPED & SIGNED BY THE DESIGN PROFESSIONAL OF RECORD.

REVISIONS
1
2
3
4

DRAWN BY:	R.A.
SCALE:	AS NOTED
DATE:	10/04/2026
PROJECT NO:	2020-26

SHEET TITLE:
TITLE SHEET

SHEET NUMBER:
TS-N

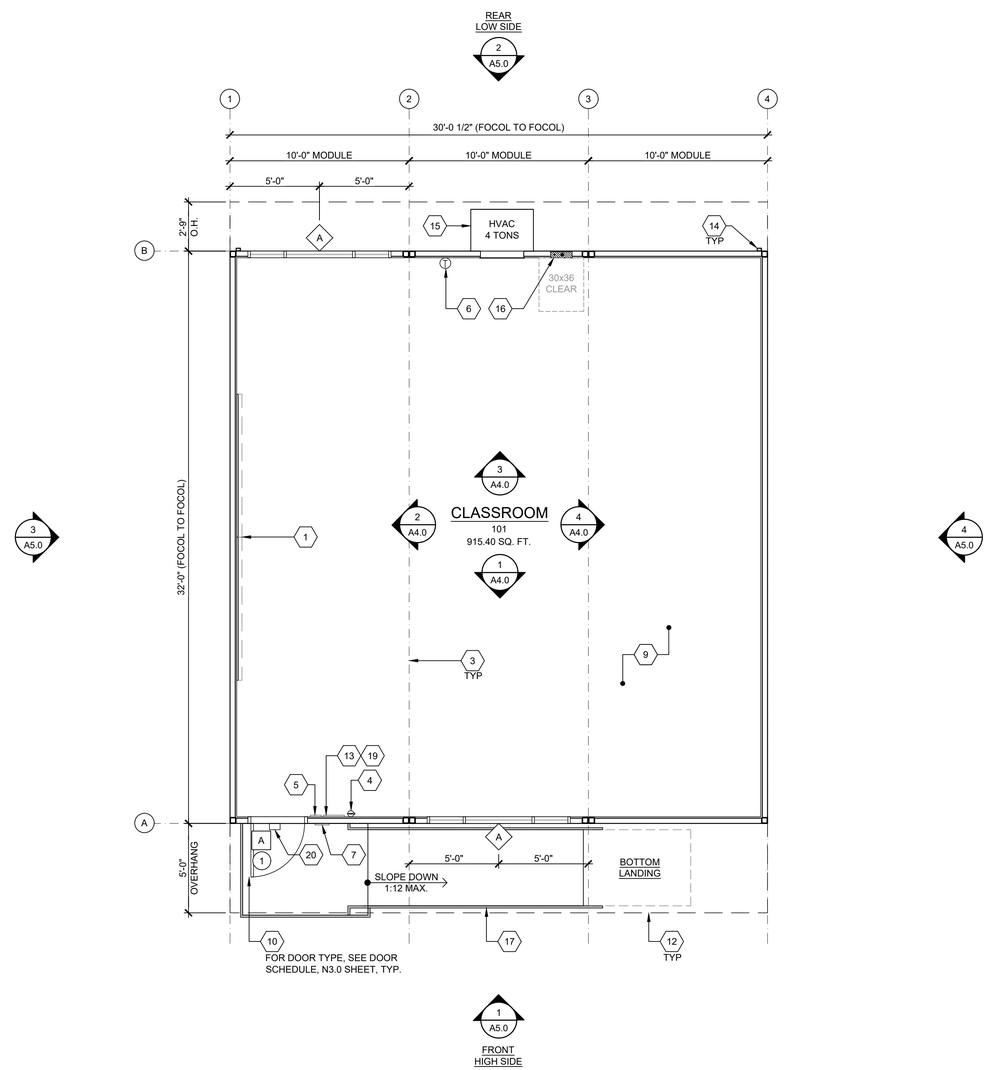

BUILDING SIZE SCHEDULE			
BUILDING SIZE	TOTAL # OF 10'-0" WIDE MODULES	TOTAL # OF CENTER MODULES	TOTAL FNDN WIDTH
☒ 30'x32'	3	1	30'-0¾"
☐ 40'x32'	4	2	40'-1"
☐ 50'x32'	5	3	50'-1¼"
☐ 60'x32'	6	4	60'-1½"

SERIAL NUMBERS:
~~(1) 26-314-002 A-C~~
(1) 26-315-002 A-C
(1) 26-315-003 A-C

CLASSROOM FLOOR PLAN

SCALE: 1/4" = 1'-0" A

1. (2) 8'x4' MARKER BOARDS - SEE SHEET A4.0
2. NOT USED
3. TYP. MOD LINE
4. FIRE EXTINGUISHER - TOP OF HANDLE @ +46" A.F.F. 4" MAX PROTRUSION FROM WALL IF BOTTOM OF FIRE EXTINGUISHER IS ABOVE 27" A.F.F. - SEE 19/N4.0
5. TACTILE EXIT SIGN PER DETAIL 10/N4.0-B - "EXIT RAMP DOWN" SIGN WHEN RAMP IS BEING USED (BY OTHERS)
6. THERMOSTAT - TOP @ 46" A.F.F. - SEE ELECTRICAL SHEETS
7. ROOM SIGNAGE AND I.S.A. PER DETAILS 5&9/N4.0 (BY OTHERS)
8. NOT USED
9. FLOORING (BY OTHERS)
10. EGRESS DOOR
11. NOT USED
12. OVERHANG
13. OCCUPANT LOAD SIGN PER DETAIL 11/N4.0 (BY OTHERS)
14. DOWNSPOUT - DISCHARGE TO SPLASH BLOCK (U.O.N.) (QUANTITY AND LOCATION MAY VARY)
15. HVAC - SEE EXTERIOR ELEVATIONS & MECHANICAL SHEET NOTES
16. ELECTRICAL PANEL (LOCATION MAY VARY)
17. TYPICAL RAMP - REFER TO DETAIL 16/-.
18. NOT USED
19. ASSISTIVE LISTENING (AL) SIGN POSTED IN PROMINENT PLACE AT OR NEAR THE ENTRANCE PER 17/N4.0. (BY OTHERS)
20. EXTERIOR LIGHT - SEE ELECTRICAL

KEY NOTES

1. ~~REFER TO SHEETS N5.0 FOR POSSIBLE ADDITIONAL FLOOR PLAN CONFIGURATIONS.~~
2. ~~OPTIONAL INTERIOR WALLS MAY OCCUR THROUGHOUT THE BUILDING AS CONSTRUCTED PER SHEET S8.1. THE PC TITLE 24 HAS BEEN RUN FOR THE WORST CASE ENVELOPE BASED ON AREA.~~
3. ~~PANIC HARDWARE COMPLYING WITH C.B.C. 1010.2.9 IS REQUIRED TO BE INSTALLED WHEN THE CONFIGURATION OF ANY ROOM PROVIDES AN OCCUPANT LOAD OF 50 OR GREATER.~~
4. ~~IF OCCUPANCY LOAD EXCEEDS 50, PROVIDE A SECOND EXIT DOOR, PER CBC TABLE 1006.2.1.~~
5. FOR ROOMS OR SPACES CLASSIFIED AS AN ASSEMBLY OCCUPANCY, PROVIDE AN OCCUPANT LOAD SIGN (BY OTHERS) IN A CONSPICUOUS PLACE, NEAR THE MAIN EXIT, PER C.B.C. SECTION 1004.9.
6. ALL PRIMARY EXTERIOR DOOR ENTRIES SHALL BE COVERED TO PREVENT WATER INTRUSION BY USING NONABSORBENT FLOOR AND WALL FINISHES WITHIN AT LEAST 2 FEET AROUND AND PERPENDICULAR TO OPENING, PER CALGREEN, SECTION 5.407.2.2.1.
7. PRIMARY EXTERIOR DOOR ENTRIES SHALL HAVE AT LEAST ONE OF THE FOLLOWING:
   - INSTALLED AWNING AT LEAST 4 FEET IN DEPTH (BY OTHERS).
   - ROOF OVERHANG AT LEAST 4 FEET IN DEPTH.
   - DOOR RECESSED AT LEAST 4 FEET.
   - OTHER METHODS WHICH PROVIDE EQUIVALENT PROTECTION (BY OTHERS).
8. WINDOW PLACEMENT & SIZE MAY VARY. THE WINDOW GLASS SHALL NOT EXCEED THE AREA LISTED IN THE WINDOW GLAZING AREA TABLE IN SHEET N3.0
9. CABINETRY MAY BE INSTALLED ON ONE OR BOTH SIDES OF THE INTERIOR WALLS AND THE INSIDE FACE OF EXTERIOR WALLS WHEN INSTALLED PER THE DETAIL 8/A7.1.
10. IF FIRE RATED WALLS ARE REQUIRED DUE TO SITE SPECIFIC REQUIREMENTS, REFER TO DETAILS IN SHEET A8.0 FOR 1-HR RATED DETAILS

SHEET NOTES

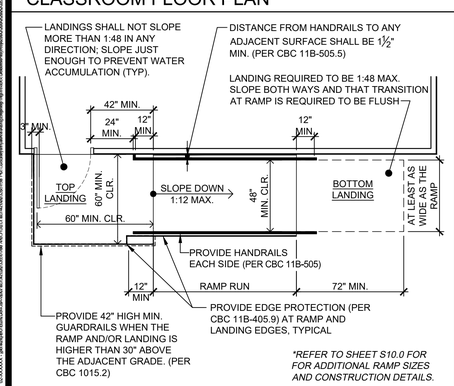

**REFER TO SHEET S10.0 FOR FOR ADDITIONAL RAMP SIZES AND CONSTRUCTION DETAILS.*

RAMP PLAN

SCALE: 1/4" = 1'-0" 16

(NO HATCH) 2X4 WALLS

WALL LEGEND

- (X) = KEY NOTE - SEE KEY NOTES ABOVE
- (X) = DOOR TYPE - SEE SCHEDULE, SHEET N3.0
- [X] = DOOR HARDWARE - SEE HARDWARE SCHEDULE, SHEET N3.0
- (X) = WINDOW TYPE - SEE SCHEDULE, SHEET N3.0

SYMBOLS LEGEND

17

ENERGY CONTROLS

1. DEMAND RESPONSE CONTROLS:
   ONLY REQUIRED IN BUILDINGS LARGER THAN 10,000 S.F., THEREFORE, NOT REQUIRED FOR THIS PC.
2. AUTOMATIC DAYLIGHTING CONTROLS:
   NOT REQUIRED IN ROOMS WHERE COMBINED INSTALLED LIGHTING POWER IN COMBINED SKYLIT & PRIMARY DAYLIT ZONES ARE <120 WATTS. INSTALLED WATTAGE IN PRIMARY SIDELIT DAY LIT ZONE IS 90 WATTS (2x 45w, AS SHOWN ON SHEET E1.0). THEREFORE, AUTOMATIC DAYLIGHTING CONTROLS ARE NOT REQUIRED.
3. ENERGY MANAGEMENT CONTROL SYSTEM (EMCS) CONNECTION:
   PER TITLE 24 CODE, "AN EMCS MAY BE INSTALLED TO COMPLY WITH THE REQUIREMENTS OF ONE OR MORE LIGHTING CONTROLS IF IT MEETS THE MINIMUM REQUIREMENTS". PC MAY CONTAIN OCCUPANCY SENSORS AND PHOTOCELL CONTROL LIGHTING, IN THAT CASE, AN EMCS IS NOT REQUIRED FOR THIS PC.
4. SOLAR-READY ZONE REQUIREMENTS:
   REQUIREMENTS & TABLE CAN BE FOUND ON SHEET A2.0

NOTE:
ANY MONITORING EQUIPMENT OR ASSOCIATED SENSORS ARE SITE SPECIFIC AND ARE NOT INCLUDED IN THE BASE PC.

ENERGY NOTES

ACOUSTIC CONTROLS

1. WHEN THE PRE-CHECK (PC) BUILDING IS SITE ADAPTED, THE BUILDING AND SITE FEATURES SHALL COMPLY WITH THE CALGREEN CODE, SECTION 5.507.4, FOR THE SPECIFIC SITE LOCATION.
2. MINIMUM WALL ASSEMBLIES:
   WALL ASSEMBLIES SHALL BE CONSTRUCTED PER DETAIL SHEETS A5.1& A8.0, WITH EITHER 2x4 WOOD STUDS.
   MINIMUM STC RATINGS LISTED BELOW ARE PER THE CATALOG OF STC & IIC RATINGS FOR WALL AND FLOOR/CEILING ASSEMBLIES, PRODUCED BY THE OFFICE OF NOISE CONTROL, CA DEPARTMENT OF HEALTH SERVICES.

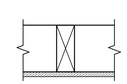

(1) LAYER 1/2" GYPSUM BOARD
SECURED TO MIN. 2x4 STUDS @ 16"
O.C. MAX.

STC=28
(CATALOG SECTION 1.2.1.5.4.1)
TEST REF.: NATIONAL RESEARCH
COUNCIL OF CANADA - NRC #66

3. IN THE EVENT THAT A PC CLASSROOM IS DESIGNED TO CONNECT TO ANOTHER PC CLASSROOM OR RESTROOM, INTERIOR SOUND TRANSMISSION IN THE INTERIOR ADJOINING WALL AND FLOOR/CEILING SHALL MEET THE MINIMUM REQUIREMENT OF A STC OF 40, PER CALGREEN CODE SECTION 507.4.3. (EXAMPLES OF QUALIFYING ASSEMBLIES SHOWN BELOW).

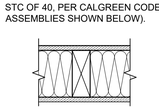

(2) LAYER 5/8" GYPSUM BOARD
SECURED TO MIN. 2x4 STUDS @ 24"
O.C. MAX. w/ 3½" THK. BATT
INSULATION

STC=40
TEST REF.: AUDIO ALLOY L.L.C TEST
NUMBER: OL-05-1003

4. MINIMUM WINDOW & DOOR RATINGS:
   ALL WINDOWS AND DOORS SPECIFIED ON THE SCHEDULES FOUND ON SHEET N3.0 OF THIS PACKAGE SHALL MEET A MINIMUM STC RATING OF 27.

ACOUSTIC NOTES

IDENTIFICATION STAMP
DIV. OF THE STATE ARCHITECT
APP: 04-125522 INC: A
REVIEWED FOR
SS ☑ FLS ☑ ACS ☑
DATE: 08/19/2026

American Modular Systems
787 Spreckels Ave., Manteca, CA 95336
Phone (209) 825-1921 Fax (209) 825-7018
www.americanmodular.com

INTELLECTUAL-PROPERTY & PROPRIETARY RIGHTS STATEMENT
COPYRIGHT © AMERICAN MODULAR SYSTEMS (AMS)
AMS OWNS ALL COPYRIGHT AND OTHER INTELLECTUAL-PROPERTY AND PROPRIETARY RIGHTS IN THESE DRAWINGS, SPECIFICATIONS, AND THE MATERIAL CONTAINED HEREIN. CERTAIN ELEMENTS SHOWN IN THESE DOCUMENTS ARE REGISTERED TRADEMARKS OF AMS. ALL PATENTABLE MATERIALS CONTAINED IN THESE DOCUMENTS AND ORIGINATING WITH AMS WILL REMAIN THE SOLE PROPERTY OF AMS. THESE DRAWING, SPECIFICATIONS, AND THE MATERIAL CONTAINED HEREIN MAY NOT BE REPRODUCED, TRANSMITTED, COPIED, DISTRIBUTED, MODIFIED, OR OTHERWISE DISPOSED OF (DIRECTLY OR INDIRECTLY) AND MAY NOT BE USED (IN WHOLE OR IN PART) TO ASSIST IN THE CONSTRUCTION, DESIGN, OR OTHER MAKING OF, OR FOR THE PURPOSE OF FURNISHING ANY INFORMATION FOR THE CONSTRUCTION, DESIGN, OR OTHER MAKING OF, ANY BUILDINGS (MODULAR OR OTHERWISE), DRAWINGS, SPECIFICATIONS, PRINTS, APPARATUS, OR PARTS THEREOF, EXCEPT AS EXPRESSLY PERMITTED BY WRITTEN CONSENT OF, OR IN A WRITTEN AGREEMENT WITH, AMS. SUBMITTAL OR DISTRIBUTION TO MEET OFFICIAL REGULATORY REQUIREMENTS WILL NOT BE CONSTRUED AS PUBLICATION IN DEROGATION OF AMS'S COPYRIGHT OR OTHER INTELLECTUAL-PROPERTY OR PROPRIETARY RIGHTS.

PRE-CHECKED SET NAME

30' x 32' THRU 60' x 32'

2GO

SITE SPECIFIC PROJECT NAME

AMS STOCKPILE
(3) 30'x32' BUILDINGS

MANUFACTURER PROFESSIONAL OF RECORD

LICENSED ARCHITECT
ANDREW PATRICK O'HANLON
No. C12631
Ren. 3-31-27
STATE OF CALIFORNIA

THESE DRAWINGS ARE PRELIMINARY AND NOT FOR CONSTRUCTION UNLESS STAMPED & SIGNED BY THE DESIGN PROFESSIONAL OF RECORD.

REVISIONS
1
2
3
4

DRAWN BY:	R.A.
SCALE:	AS NOTED
DATE:	14/04/2026
PROJECT NO:	2020-26

SHEET TITLE:

CLASSROOM
FLOOR PLAN

SHEET NUMBER:

A1.0-N

REAR

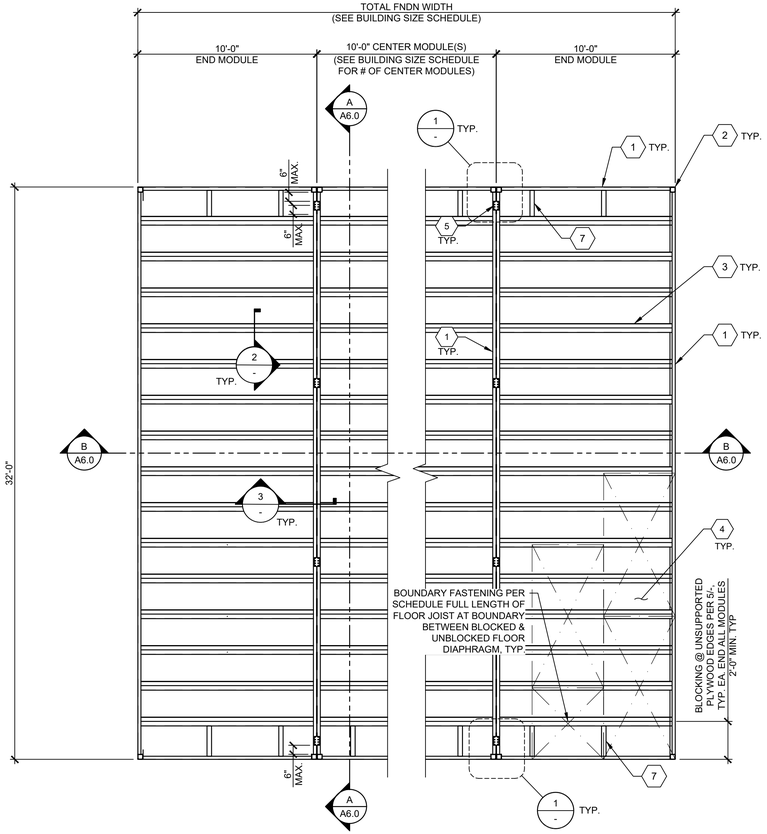

FRONT

FOR 'B' OFFICE OCCUPANCIES 12 GA FLOOR JOISTS MUST BE USED

FLOOR JOIST SCHEDULE		
LIVE LOAD PSF	14 GA. JOIST	12 GA. JOIST
☐ 50 PSF	24" O.C.	24" O.C.
☒ 50+15 PSF	24" O.C.	24" O.C.
☐ 100 PSF	24" O.C.	24" O.C.

NOTES:
FOR SECTION PROPERTIES - SEE S0.0.
EITHER 14GA OR 12GA ARE ACCEPTABLE BASED ON CURRENT AVAILABILITIES.

FRAMING PLAN (PLYWOOD FLOOR) SCALE : 1/4" = 1'-0" A

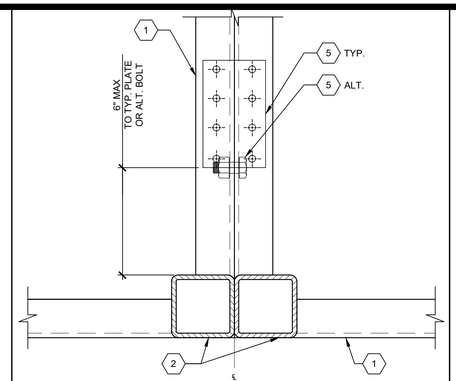

TYP. FLOOR BEAMS CONNECTION SCALE : 3" = 1'-0" 1

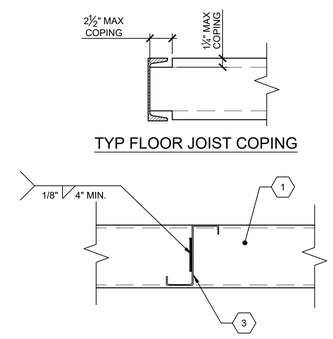

TYP FLOOR JOIST COPING

TYP. JOIST ATTACTMENT TO BEAM SCALE : 3" = 1'-0" 2

1. FLOOR BEAM PER SHEET S5.0.
   USE SINGLE SIZE CHANNEL THROUGHOUT FLOOR SYSTEM.
2. HSS COLUMN PER SHEET S5.0
3. FLOOR JOIST - SEE SCHEDULE
4. 1⅛" T&G PLYWOOD FLOOR SHTG STURDI-I-FLOOR 48" O.C. SPAN RATING EXP. 1 CONFORMING TO PS 1-19, 2 SPANS MIN. OPTION: UNI-FLOOR BY PITTSBURGH TESTING LAB CONFORMING TO PS 1-19. STAGGER SHEETS 48" O.C. AS SHOWN w/ FACE GRAIN PERPENDICULAR TO FLOOR JOISTS. FASTEN PER SCHEDULES.
5. PLATE ½"x3½"x6" @ 10'-0" O.C. MAX w/ (8) #12x1" SDSTS; SEE DETAIL 3/-.
   ALTERNATE: ½"Øx1½" MB @ 10'-0" O.C. MAX AND 6" MAX FROM EACH END OF MODULE. BOLT Ø $\frac{9}{16}$" MAX HOLE THRU CHANNELS; SEE DETAIL 3/-.
6. NOT USED
7. 2¾"x2¾"x 14Ga. BLOCKING ANGLE PER DETAIL 5/-, AT UNSUPPORTED PLYWOOD EDGES WHERE SPECIFIED ON THE FLOOR FRAMING PLAN.

KEY NOTES

1. NOT USED
2. THE MATERIAL THICKNESS OF LIGHT GAUGE STRUCTURAL MEMBERS, IN THEIR END-USE, SHALL MEET OR EXCEED THE MINIMUM BASE METAL THICKNESS SPECIFIED ON SHEET S0.O. THE MATERIAL GAUGE DESIGNATION IN THE PLAN SHALL BE USED AS REFERENCE ONLY.
3. SDSTS PER ASTM C1513 AND ICC ESR-1976 (OR EQUAL)
4. ET&F PINS PER IAPMO REPORT ER-335

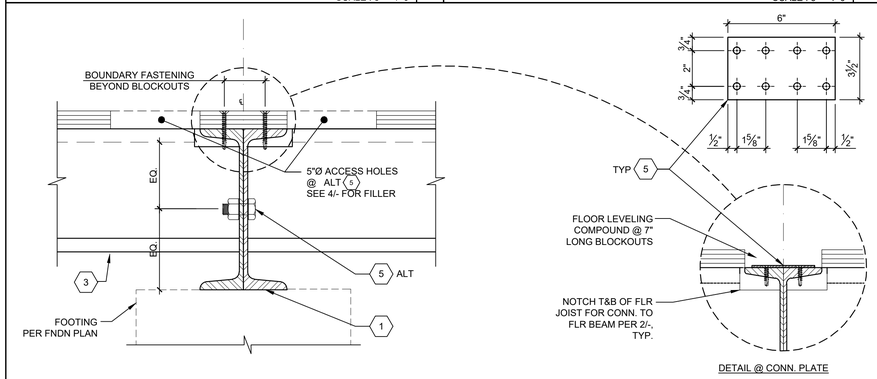

TYP. BEAM TO BEAM CONNECTION SCALE : 3" = 1'-0" 3

GENERAL NOTES

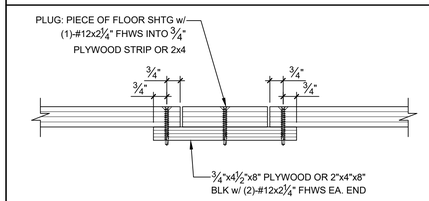

TYP. ACCESS HOLE FILLER SCALE : 3" = 1'-0" 4

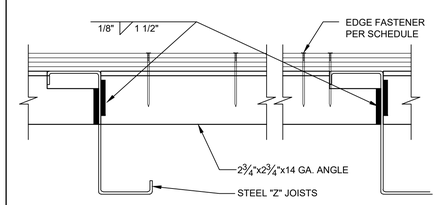

OPTIONAL BLOCKING ANGLE ATTACHMENT SCALE : 3" = 1'-0" 5

NOT USED 6

BUILDING SIZE SCHEDULE			
BUILDING SIZE	TOTAL # OF 10'-0" WIDE MODULES	TOTAL # OF CENTER MODULES	TOTAL FNDN WIDTH
☒ 30'x32'	3	1	30'-0¾"
☐ 40'x32'	4	2	40'-1"
☐ 50'x32'	5	3	50'-1¼"
☐ 60'x32'	6	4	60'-1½"

BUILDING SIZE SCHEDULE

BOUNDARY FASTENING*	EDGE FASTENING	FIELD FASTENING
#10 OR #12 x 2 ¼" SDSTS	0.144"Øx2" ET&F PINS	0.144"Øx2" ET&F PINS
6" O.C.	6" O.C.	12" O.C.

*BOUNDARY FASTENING IS APPLIED TO PERIMETER OF ALL MODULES ALONG FRAME LINES

NOTES:
SCHEDULE APPLIES TO ALL FLOOR LIVE LOADS.
REFER TO GENERAL NOTE #3 FOR ICC ESR#

TYPICAL FASTENER SPACING SCHEDULE

BOUNDARY FASTENING*	EDGE FASTENING	FIELD FASTENING
#10 OR #12 x 2 ¼" SDSTS	#10 OR #12 x 2 ¼" SDSTS	#10 OR #12 x 2 ¼" SDSTS
6" O.C.	6" O.C.	12" O.C.

*BOUNDARY FASTENING IS APPLIED TO PERIMETER OF ALL MODULES ALONG FRAME LINES

NOTES:
SCHEDULE APPLIES TO ALL FLOOR LIVE LOADS.
REFER TO GENERAL NOTE #3 FOR ICC ESR#

ALTERNATE FASTENER SPACING SCHEDULE

NOT USED 7

IDENTIFICATION STAMP
DIV. OF THE STATE ARCHITECT
APP: 04-125522 INC:
REVIEWED FOR
SS ☑ FLS ☑ ACS ☑
DATE: 08/19/2026

AMS®
American Modular Systems
787 Spreckels Ave., Manteca, CA 95336
Phone (209) 825-1921 Fax (209) 825-7018
www.americanmodular.com

INTELLECTUAL-PROPERTY & PROPRIETARY RIGHTS STATEMENT
COPYRIGHT © AMERICAN MODULAR SYSTEMS (AMS)
AMS OWNS ALL COPYRIGHT AND OTHER INTELLECTUAL-PROPERTY AND PROPRIETARY RIGHTS IN THESE DRAWINGS, SPECIFICATIONS, AND THE MATERIAL CONTAINED HEREIN. CERTAIN ELEMENTS SHOWN IN THESE DOCUMENTS ARE REGISTERED TRADEMARKS OF AMS. ALL PATENTABLE MATERIALS CONTAINED IN THESE DOCUMENTS AND ORIGINATING WITH AMS WILL REMAIN THE SOLE PROPERTY OF AMS. THESE DRAWING, SPECIFICATIONS AND THE MATERIAL CONTAINED HEREIN MAY NOT BE REPRODUCED, TRANSMITTED, COPIED, DISTRIBUTED, MODIFIED, OR OTHERWISE DISPOSED OF (DIRECTLY OR INDIRECTLY) AND MAY NOT BE USED (IN WHOLE OR IN PART) TO ASSIST IN THE CONSTRUCTION, DESIGN, OR OTHER MAKING OF, OR FOR THE PURPOSE OF FURNISHING ANY INFORMATION FOR THE CONSTRUCTION, DESIGN, OR OTHER MAKING OF, ANY BUILDINGS (MODULAR OR OTHERWISE), DRAWINGS, SPECIFICATIONS, PRINTS, APPARATUS, OR PARTS THEREOF, EXCEPT AS EXPRESSLY PERMITTED BY WRITTEN CONSENT OF, OR IN A WRITTEN AGREEMENT WITH, AMS. SUBMITTAL OR DISTRIBUTION TO MEET OFFICIAL REGULATORY REQUIREMENTS WILL NOT BE CONSTRUED AS PUBLICATION IN DEROGATION OF AMS'S COPYRIGHT OR OTHER INTELLECTUAL-PROPERTY OR PROPRIETARY RIGHTS.

PRE-CHECKED SET NAME

30' x 32' THRU 60' x 32'

2GO®

SITE SPECIFIC PROJECT NAME

APPROVED
DIV. OF THE STATE ARCHITECT
APP: 04-122041 PC
REVIEWED FOR
SS ☑ FLS ☑ ACS ☑ CG ☑
DATE: 04/05/2024

☐ 2022 CBC PRE-CHECK (PC) DOCUMENT
A SEPARATE PROJECT APPLICATION FOR CONSTRUCTION IS REQUIRED.

MANUFACTURER PROFESSIONAL OF RECORD ON PC

LICENSED ARCHITECT
KEVIN PATRICK CONLEY
No. C12631
Ren. 3-31-27
STATE OF CALIFORNIA

THESE DRAWINGS ARE PRELIMINARY AND NOT FOR CONSTRUCTION UNLESS STAMPED & SIGNED BY THE DESIGN PROFESSIONAL OF RECORD.

REVISIONS
1
2
3
4

DRAWN BY:	A.A.
SCALE:	AS NOTED
DATE:	DD/MM/YY
PROJECT NO:	XXXX-XX

SHEET TITLE:
FLOOR FRAMING PLAN
& DETAILS FOR
PLYWOOD FLOOR

SHEET NUMBER:
S3.0-N

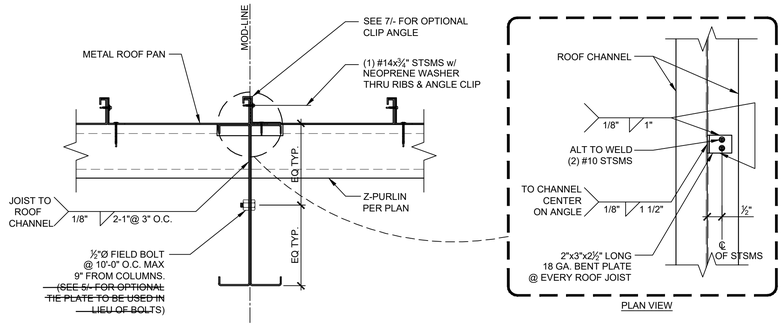

ROOF BEAM CONNECTION DETAIL — SCALE: 1 1/2"=1'-0" — 1

NOT USED — SCALE: 1 1/2"=1'-0" — 2

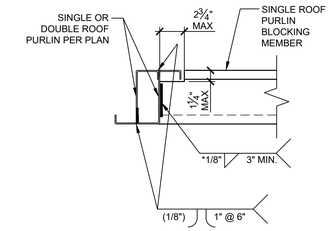

*NOTE: SEE NOTE #1 OF GENERAL NOTES

BLOCKING & DBL PURLIN CONNECTION DETAIL — SCALE: 1 1/2"=1'-0" — 3

NOT USED — SCALE: 1 1/2"=1'-0" — 4

NOT USED — 5

NOT USED — 6

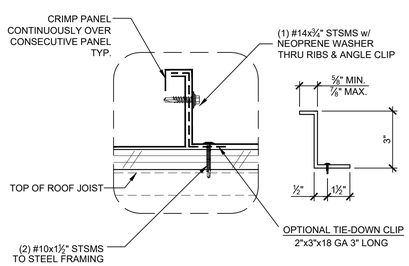

NOTE:
MECHANICALLY CRIMP EACH STANDING SEAM ENTIRELY.
MECHANICALLY CRIMP PANELS OVER ALL CLIPS.

ROOF DETAIL (OPTIONAL ROOF PAN CLIP) — SCALE: 1 1/2"=1'-0" — 7

NOT USED — 8

NOT USED — 9

NOT USED — 10

NOT USED — 11

NOT USED — 12

NOT USED — 13

NOT USED — 14

NOT USED — 15

1. THE MATERIAL THICKNESS OF LIGHT GAUGE STRUCTURAL MEMBERS, IN THEIR END-USE, SHALL MEET OR EXCEED THE MINIMUM BASE METAL THICKNESS SPECIFIED ON SHEET S0.0 THE MATERIAL GAGE DESIGNATION IN THE PLAN SHALL BE USED AS REFERENCE ONLY.

GENERAL NOTES — 16

IDENTIFICATION STAMP
DIV. OF THE STATE ARCHITECT
APP: 04-125522 INC:
REVIEWED FOR
SS ☑ FLS ☑ ACS ☑
DATE: 08/19/2026

AMS®
American Modular Systems
787 Spreckels Ave., Manteca, CA 95336
Phone (209) 825-1921 Fax (209) 825-7018
www.americanmodular.com

INTELLECTUAL-PROPERTY & PROPRIETARY RIGHTS STATEMENT
COPYRIGHT © AMERICAN MODULAR SYSTEMS (AMS)
AMS OWNS ALL COPYRIGHT AND OTHER INTELLECTUAL-PROPERTY AND PROPRIETARY RIGHTS IN THESE DRAWINGS, SPECIFICATIONS, AND THE MATERIAL CONTAINED HEREIN. CERTAIN ELEMENTS SHOWN IN THESE DOCUMENTS ARE REGISTERED TRADEMARKS OF AMS. ALL PATENTABLE MATERIALS CONTAINED IN THESE DOCUMENTS AND ORIGINATING WITH AMS WILL REMAIN THE SOLE PROPERTY OF AMS. THESE DRAWING, SPECIFICATIONS AND THE MATERIAL CONTAINED HEREIN MAY NOT BE REPRODUCED, TRANSMITTED, COPIED, DISTRIBUTED, MODIFIED, OR OTHERWISE DISPOSED OF (DIRECTLY OR INDIRECTLY) AND MAY NOT BE USED (IN WHOLE OR IN PART) TO ASSIST IN THE CONSTRUCTION, DESIGN, OR OTHER MAKING OF, OR FOR THE PURPOSE OF FURNISHING ANY INFORMATION FOR THE CONSTRUCTION, DESIGN, OR OTHER MAKING OF, ANY BUILDINGS (MODULAR OR OTHERWISE), DRAWINGS, SPECIFICATIONS, PRINTS, APPARATUS, OR PARTS THEREOF, EXCEPT AS EXPRESSLY PERMITTED BY WRITTEN CONSENT OF, OR IN A WRITTEN AGREEMENT WITH, AMS. SUBMITTAL OR DISTRIBUTION TO MEET OFFICIAL REGULATORY REQUIREMENTS WILL NOT BE CONSTRUED AS PUBLICATION IN DEROGATION OF AMS'S COPYRIGHT OR OTHER INTELLECTUAL-PROPERTY OR PROPRIETARY RIGHTS.

PRE-CHECKED SET NAME
30' x 32' THRU 60' x 32'
2GO®

SITE SPECIFIC PROJECT NAME
.
.
.

APPROVED
DIV. OF THE STATE ARCHITECT
APP: 04-122041 PC
REVIEWED FOR
SS ☑ FLS ☑ ACS ☑ CG ☑
DATE: 04/05/2024

☐ 2022 CBC PRE-CHECK (PC) DOCUMENT
A SEPARATE PROJECT APPLICATION FOR CONSTRUCTION IS REQUIRED

MANUFACTURER PROFESSIONAL OF RECORD ON PC

LICENSED ARCHITECT
ANGELO PATRICK GIARDINA
No. C12631
Ren. 3-31-27
STATE OF CALIFORNIA

THESE DRAWINGS ARE PRELIMINARY AND NOT FOR CONSTRUCTION UNLESS STAMPED & SIGNED BY THE DESIGN PROFESSIONAL OF RECORD.

REVISIONS
1
2
3
4

DRAWN BY:	A.A.
SCALE:	AS NOTED
DATE:	DD/MM/YY
PROJECT NO:	XXXX-XX

SHEET TITLE:
ROOF FRAMING DETAILS

SHEET NUMBER:
S4.2-N

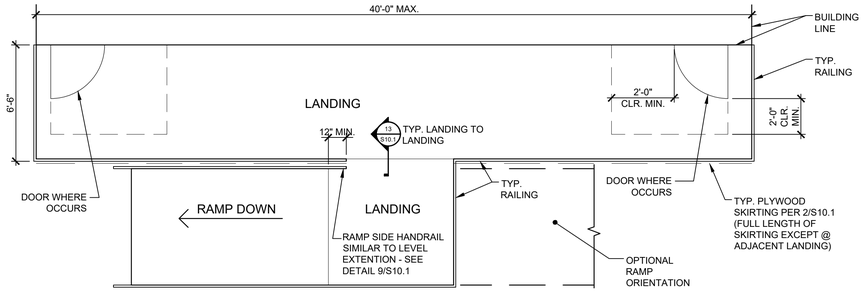

TYPICAL ARCHITECTURAL PLAN

SCALE: 1/4"=1'-0"

RAMP AND LANDING DATA

OCCUPANCY	TO MATCH BUILDING
SNOW AND ICE LOAD	NOT CONSIDERED
RAMP LIVE LOAD (MAX. PSF)	100 (1,000# CONCENTRATED LD)
DESIGN DEAD LOADS (MAX PSF)	12.0
ALLOWABLE SOIL PRESSURE (PSF)	1,000 FOR WOOD FOUNDATION
LATERAL LOADS	TO MATCH MAX BUILDING REQUIREMENTS
LANDING - PERPENDICULAR TO RAMP DIRECTION & RAMP	OTHER SELF-SUPPORTING STRUCTURE (SEE FRAMES - 7/S10.1) R=1.25 I = 1.0 Ωo = 2.0
LANDING - PARALLEL TO RAMP DIRECTION	PLYWOOD SKIRTING (SHEARWALL)* (SEE DETAIL 2/S10.1)

* NOTE:
LANDING SECTIONS BUILT-UP AGAINST THE BUILDING ARE NOT REQUIRED TO HAVE SKIRTING PER DETAIL 2/S10.1
THE LANDING IS DESIGNED AS AN OPEN FRONT DIAPHRAGM TO BE LATERALLY CANTILEVERED OFF THE FRONT SKIRTING AND THE FRAMES DETAILED ON 7/S10.1.

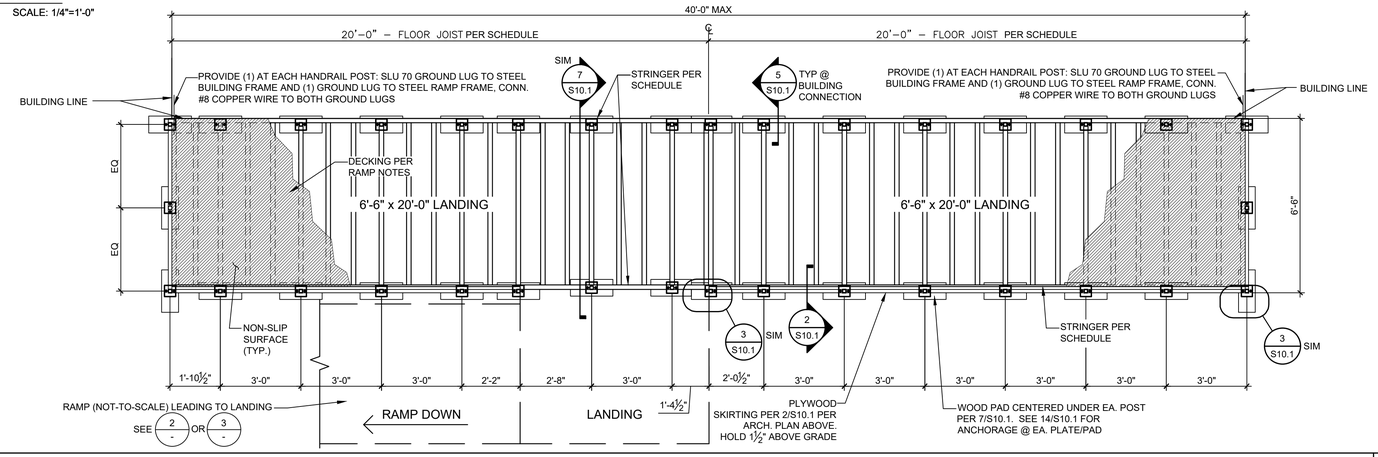

LANDING PLAN OPTION

SCALE: 3/8" = 1'-0" 1

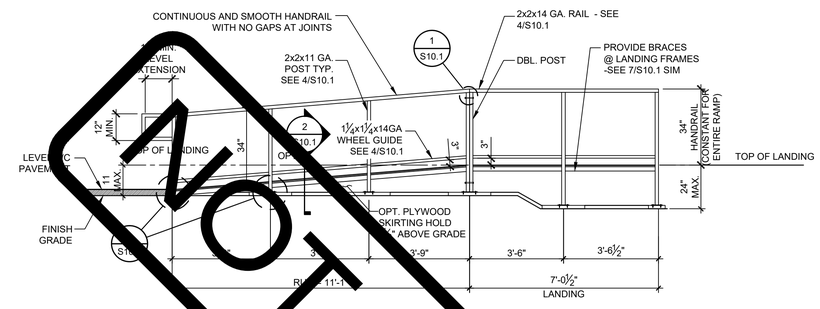

NOTE: RAMP & LANDING TO BE FABRICATED IN SECTIONS (2 MIN.) FOR MOVING

RAMP ELEVATION

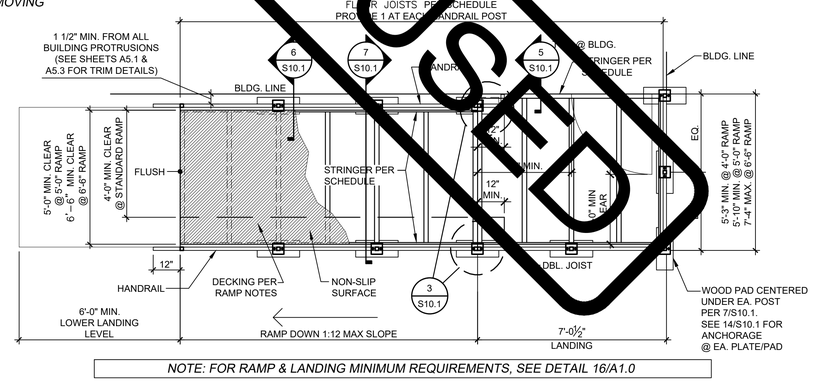

NOTE: FOR RAMP & LANDING MINIMUM REQUIREMENTS, SEE DETAIL 16/A1.0

11-FOOT TYPICAL RAMP

SCALE: 3/8" = 1'-0" 2

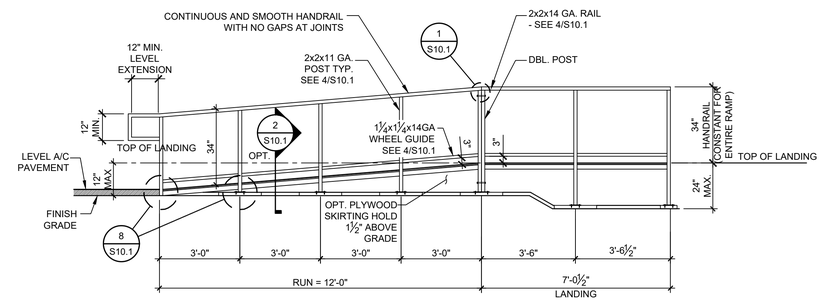

NOTE: RAMP & LANDING TO BE FABRICATED IN SECTIONS (2 MIN.) FOR MOVING

RAMP ELEVATION

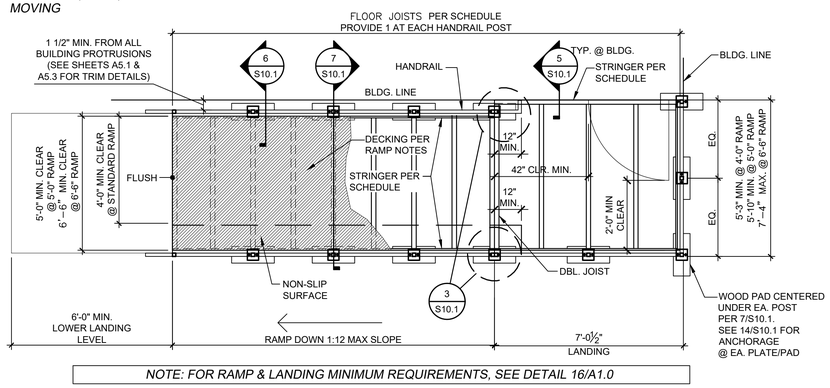

NOTE: FOR RAMP & LANDING MINIMUM REQUIREMENTS, SEE DETAIL 16/A1.0

12-FOOT TYPICAL RAMP

SCALE: 3/8" = 1'-0" 3

1. ENTRY RAMP AND LANDING SPECIFICATIONS

EACH BUILDING SHALL HAVE A RAMP AND LANDING TO CONFORM TO TITLE 24 C.C.R. SECTIONS 11B-405, 1010 AND 1012. THE RAMP AND LANDING STRUCTURES INCLUDING HANDRAILS AND WHEEL GUIDE RAILS ARE TO BE PREFABRICATED METAL IN SECTIONS THAT ARE DEMOUNTABLE FOR MOVING AND REINSTALLATION AT A NEW SITE.
HANDRAILS AND WHEEL GUIDE RAILS SHALL BE CONTINUOUS AND SMOOTH WITH NO GAPS AT JOINTS. DESIGN SHALL BE SUCH THAT HEIGHT ADJUSTMENT CAN BE MADE AT THE INSTALLATION SITE. THE RAMP AND LANDING SURFACE SHALL BE ¾" MARINE GRADE PLYWOOD OR 11GA SHEET METAL. RAMP AND LANDING SHALL HAVE A NON-SLIP SURFACE FINISH APPLIED. NON-SLIP FINISH SHALL BE AMCOE GRIP II MANUFACTURED BY AMERICAN ABRASIVE METALS OR COMPARABLE. ALL RAMP SURFACES SHALL BE PAINTED AS INDICATED IN SECTION 9B ON SHEET N1.0. RAMPS SHALL HAVE HANDRAILS ON BOTH SIDES. WALL MOUNTED HANDRAILS SHALL BE OF SIMILAR CONSTRUCTION TO THE INTEGRAL RAMP HANDRAIL AND MOUNTED AT THE SAME HEIGHT. RAMP AND LANDING SHALL BE FULLY SKIRTED WITH THE SAME MATERIAL USED FOR BUILDING SKIRT. SIDES OF RAMP AND LANDING THAT DO NOT ADJOIN BUILDING WALL SHALL BE SKIRTED. ALL EDGES OF THE PLYWOOD SKIRT SHALL BE SUPPORTED AND PROTECTED FROM WEATHER. FOUNDATION MEMBERS SHALL BE AS FOR BUILDING FOUNDATION. ONLY THE FOUNDATION PAD RESTING ON GRADE MAY EXTEND BEYOND THE OUTSIDE FACE OF THE SKIRT 1" MAXIMUM.

2. FLOOR DECKING

¾" MARINE EXTERIOR A.P.A. 48/24 PLYWOOD w/ NON-SLIP SURFACE. DECK SURFACES SHALL BE SEALED ON ALL SIDES. FASTENED TO STEEL FRAMING WITH #10 SELF DRILLING BUGLE HEAD 1" GALV. SCREWS OR 0.144"Øx1 ½" MIN. GALV ET&F PINS (IAPMO REPORT ER-335) OR EQUIV. @ 6" O.C. EDGES AND 12" O.C. FIELD, TYP.
PROVIDE ATTACHMENT @ 6" O.C. TO JOISTS BETWEEN HANDRAIL POST AS SHOWN ON DETAIL 7/S10.1.

3. ALT. FLOOR DECKING

10 GA. SHEET METAL WITH NON-SLIP SURFACE (0.8 MIN COEFFICIENT OF FRICTION) ATTACHED TO STEEL FRAMING WITH #12x1" STS @ 6" O.C. E.N. & 12" O.C. F.N.
PROVIDE ATTACHMENT @ 6" O.C. TO JOISTS BETWEEN HANDRAIL POST AS SHOWN ON DETAIL 7/S10.1. MATERIAL STRENGTH SHALL BE 36 KSI MIN. w/ A MODULUS OF ELASTICITY OF 29,500 KSI ± 3%. ACCEPTABLE STEEL MATERIALS INCLUDE, BUT ARE NOT LIMITED TO, THE FOLLOWING: ASTM A1011 SS GRADE 36 (Fy=36 KSI) ASTM A653 SS GRADE 37 (Fy=37 KSI) ASTM A1008 SS GRADE 40 (Fy=40 KSI).

4. GROUNDING OF BUILDING COMPONENT

CONTRACTOR SHALL BE RESPONSIBLE FOR PROVIDING NECESSARY CONNECTORS TO GROUND THE METAL PORTIONS OF THE BUILDING (I.E. FRAME, RAMP, ETC.)
GROUNDING ROD, WIRES AND TESTING SHALL BE PROVIDED BY OTHER AND MEET THE REQUIREMENTS OF I.R. E-1 ISSUED BY D.S.A.

5. RAMP SLOPE

RAMPS SHALL NOT SLOPE MORE THAN 1" RISE OVER A 12" RUN (1:12). CROSS SLOPE SHALL NOT EXCEED 1:48.

6. HANDRAILS

HANDRAILS SHALL BE INSTALLED ON BOTH SIDES OF RAMP AT 34" HIGH. HANDRAILS SHALL BE AT A CONSISTENT VERTICAL HEIGHT FOR THE ENTIRE STRUCTURE.

7. RAMP PLANNING

DUE TO VARYING SITE CONDITIONS, THE MAXIMUM HEIGHT OF FINISH FLOOR FROM GRADE IS 24", THEREFORE IT IS POSSIBLE THAT THE ACCESS RAMP ATTACHED TO THE BUILDING COULD BE 24'-0" LONG AT A SLOPE OF 1:12. ARCHITECT MUST TAKE INTO ACCOUNT THAT THE RAMP SUPPLIED BY AMS, INC. IS 12'-0" LONG AT A SLOPE OF 1:12, THEREFORE THE ARCHITECT WILL HAVE TO DESIGN AND PROVIDE SUFFICIENT DETAILS OF RAMP EXTENSIONS AND BOTTOM LANDING DEPENDING ON PARTICULAR SITE CONDITIONS. IN NO WAY IS AMS, INC. RESPONSIBLE FOR ANY RAMP EXTENSION EXCEEDING THE ORIGINAL PLAN AS SHOWN ON THIS SHEET.

8. LANDINGS

OVERALL LENGTH OF A LANDING MAY VARY FROM 60" UP TO 40'-0". LENGTH MUST CONFORM TO APPROVED LANDING. SLOPE LANDING NOT TO EXCEED 1:48 TO PREVENT WATER PONDING.

9. FASTENERS

ALL EXTERIOR USE FASTENERS SHALL BE GALVANIZED OR STAINLESS STEEL.

10. WELDING

THE DESIGN PROFESSIONAL HAS EXEMPTED THIS RAMP FROM SPECIAL INSPECTION REQUIREMENTS FOR MATERIAL IDENTIFICATION AND STRUCTURAL WELDING. RAMP SHALL NOT BE MODIFIED NOR HAVE SHIMS ADDED CAUSING THE DISTANCE BETWEEN THE HIGHEST RAMP WALKING SURFACE AND THE ADJACENT GRADE TO BE MORE THAN 30 INCHES. IF THIS CONDITION IS NOT MET, STRUCTURAL TESTING AND/OR INSPECTION WILL BE REQUIRED TO VERIFY MATERIALS AND STRUCTURAL WELDING. THIS APPLIES TO SCOPES OF WORK INCLUDING NEW CONSTRUCTION, ALTERATION, OR RELOCATION OF THE RAMP.

RAMP NOTES

RAMP/LANDING WIDTH	STRINGER SCHEDULE(1) MAX STRINGER SPANS (FT)		
	3'-0"	3'-6"	3'-9"
4'-0"	2x2x11 GA	2x2x11 GA	HSS 2x2x3/16
5'-0"	2x2x11 GA	2x2x11 GA	HSS 2x2x3/16
~~5'-10"~~	~~2x2x11 GA~~	~~2x2x11 GA~~	~~HSS 2x2x3/16~~
6'-6"	2x2x11 GA	2x2x11 GA	HSS 2x2x3/16
~~7'-4"~~	~~2x2x11 GA~~	~~2x2x11 GA~~	~~HSS 2x2x3/16~~

(1) SEE 4/S10.1 FOR LIGHT GAUGE STEEL TUBE PROPERTIES, SIZES INDICATED ARE MINIMUM. THICKER TUBES MAY BE USED. HSS 2x2x1/8 OR LARGER PER 11/S10.1 MAY BE SUBSTITUTED FOR LIGHT GAUGE TUBES.

RAMP/ LANDING WIDTH	JOIST SCHEDULE(1) MAX JOIST SPACING									
	2x2x14 GA.		2x2x11 GA.		HSS 2x2x5/8		HSS 2x2x3/16		HSS 2x2x¼	
	DECKING		DECKING		DECKING		DECKING		DECKING	
	PLY	10 GA.	PLY	10 GA.	PLY	10 GA.	PLY	10 GA.	PLY	10 GA.
4'-0"	16"	11"	16"	14"	16"	14"	16"	14"	16"	14"
5'-0"	14"	11"	16"	14"	16"	14"	16"	14"	16"	14"
~~5'-5½~~	~~-~~	~~-~~	~~12"~~	~~12"~~	~~12"~~	~~12"~~	~~16"~~	~~14"~~	~~16"~~	~~14"~~
5'-10"	-	-	12"	12"	12"	12"	15"	14"	16"	14"
6'-6"	-	-	-	-	-	-	12"	12"	14"	14"
~~7'-4"~~	~~-~~	~~-~~	~~-~~	~~-~~	~~-~~	~~-~~	~~9"~~	~~9"~~	~~11"~~	~~11"~~

(1) SEE 4/S10.1 FOR LIGHT GAUGE STEEL TUBE PROPERTIES, AND 11/S10.1 FOR HSS PROPERTIES

RAMP/ LANDING MEMBER SCHEDULE

IDENTIFICATION STAMP
DIV. OF THE STATE ARCHITECT
APP: 04-125522 INC:
REVIEWED FOR
SS ☑ FLS ☑ ACS ☑
DATE: 08/19/2026

American Modular Systems
787 Spreckels Ave., Manteca, CA 95336
Phone (209) 825-1921 Fax (209) 825-7018
www.americanmodular.com

INTELLECTUAL-PROPERTY & PROPRIETARY RIGHTS STATEMENT
COPYRIGHT © AMERICAN MODULAR SYSTEMS (AMS)
AMS OWNS ALL COPYRIGHT AND OTHER INTELLECTUAL-PROPERTY AND PROPRIETARY RIGHTS IN THESE DRAWINGS, SPECIFICATIONS, AND THE MATERIAL CONTAINED HEREIN. CERTAIN ELEMENTS SHOWN IN THESE DOCUMENTS ARE REGISTERED TRADEMARKS OF AMS. ALL PATENTABLE MATERIALS CONTAINED IN THESE DOCUMENTS AND ORIGINATING WITH AMS WILL REMAIN THE SOLE PROPERTY OF AMS. THESE DRAWING, SPECIFICATIONS, AND THE MATERIAL CONTAINED HEREIN MAY NOT BE REPRODUCED, TRANSMITTED, COPIED, DISTRIBUTED, MODIFIED, OR OTHERWISE DISPOSED OF (DIRECTLY OR INDIRECTLY) AND MAY NOT BE USED (IN WHOLE OR IN PART) TO ASSIST IN THE CONSTRUCTION, DESIGN, OR OTHER MAKING OF, OR FOR THE PURPOSE OF FURNISHING ANY INFORMATION FOR THE CONSTRUCTION, DESIGN, OR OTHER MAKING OF, ANY BUILDINGS (MODULAR OR OTHERWISE), DRAWINGS, SPECIFICATIONS, PRINTS, APPARATUS, OR PARTS THEREOF, EXCEPT AS EXPRESSLY PERMITTED BY WRITTEN CONSENT OF, OR IN A WRITTEN AGREEMENT WITH, AMS. SUBMITTAL OR DISTRIBUTION TO MEET OFFICIAL REGULATORY REQUIREMENTS WILL NOT BE CONSTRUED AS PUBLICATION IN DEROGATION OF AMS'S COPYRIGHT OR OTHER INTELLECTUAL-PROPERTY OR PROPRIETARY RIGHTS.

PRE-CHECKED SET NAME
30' x 32' THRU 60' x 32'
2GO

SITE SPECIFIC PROJECT NAME

APPROVED
DIV. OF THE STATE ARCHITECT
APP: 04-122041 PC
REVIEWED FOR
SS ☑ FLS ☑ ACS ☑ CG ☑
DATE: 04/05/2024

☐ 2022 CBC PRE-CHECK (PC) DOCUMENT
A SEPARATE PROJECT APPLICATION FOR CONSTRUCTION IS REQUIRED.

MANUFACTURER PROFESSIONAL OF RECORD ON PC

LICENSED ARCHITECT
ANDREW PATRICK KNIGHT
No. C12631
Ren. 3-31-27
STATE OF CALIFORNIA

THESE DRAWINGS ARE PRELIMINARY AND NOT FOR CONSTRUCTION UNLESS STAMPED & SIGNED BY THE DESIGN PROFESSIONAL OF RECORD.

REVISIONS
1
2
3
4

DRAWN BY:	A.A.
SCALE:	AS NOTED
DATE:	DD/MM/YY
PROJECT NO:	XXXX-XX

SHEET TITLE:
TYPICAL RAMP PLANS & NOTES

SHEET NUMBER:
S10.0-N

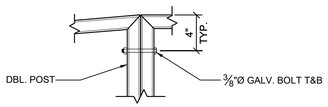

DETAIL
SCALE: 3/8"=1'-0" | 1

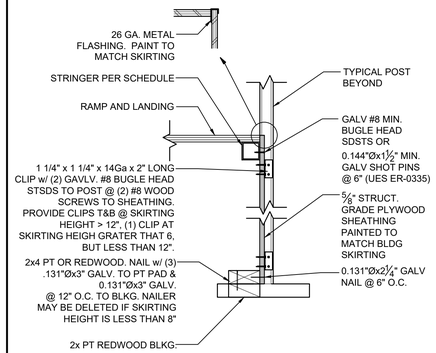

RAMP SKIRT DETAIL
SCALE: 3/8"=1'-0" | 2

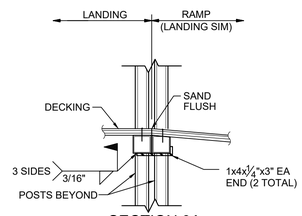

SECTION 3A

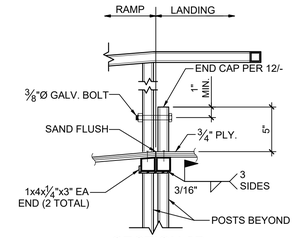

SECTION 3B

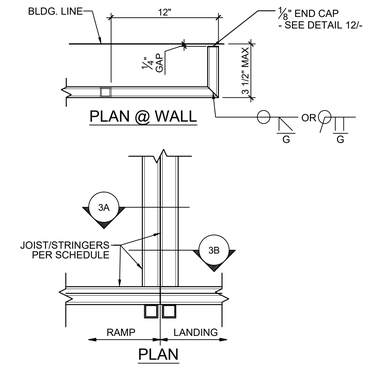

PLAN @ WALL

PLAN

RAMP TO LANDING CONNECTION DETAIL
SCALE: 3/8"=1'-0" | 3

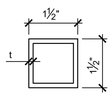

1½"x1½"x11 GA. TUBE

A = 0.602 IN^2
Sx = 0.244 IN^3
Ix = 0.183 IN^4
t = 0.112" MIN.
(0.1175" DESIGN)

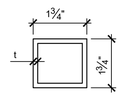

1¾"x1¾"x11 GA. TUBE

A = 0.725 IN^2
Sx = 0.356 IN^3
Ix = 0.312 IN^4
t = 0.112" MIN.
(0.1175" DESIGN)

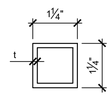

1¼"x1¼"x14 GA. TUBE

A = 0.319 IN^2
Sx = 0.114 IN^3
Ix = 0.072 IN^4
t = 0.068" MIN.
(0.0713" DESIGN)

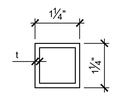

1¼"x1¼"x11 GA. TUBE

A = 0.497 IN^2
Sx = 0.163 IN^3
Ix = 0.102 IN^4
t = 0.112" MIN.
(0.1175" DESIGN)

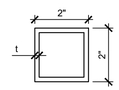

2"x2"x11 GA TUBE

A = 0.837 IN^2
Sx = .479 IN^3
Ix = .479 IN^4
t = 0.112" MIN.
(0.1175" DESIGN)

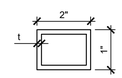

2"x1"x10 GA TUBE

A = 0.533 IN^2
Sx = 0.324 IN^3
Ix = 0.324 IN^4
t = 0.068" MIN.
(0.0713" DESIGN)

MATERIAL STRENGTH SHALL BE 36 KSI MIN. w/ A MODULUS OF ELASTICITY OF 29,500 KSI ± 3%. ACCEPTABLE STEEL MATERIALS INCLUDE, BUT ARE NOT LIMITED TO, THE FOLLOWING:

ASTM A1011 SS GRADE 36 (Fy=36 KSI)
ASTM A653 SS GRADE 37 (Fy=37 KSI)
ASTM A1008 SS GRADE 40 (Fy=40 KSI)

MATERIAL SHALL BE GIVEN A RUST INHIBITIVE COATING.

THE MATERIAL THICKNESS OF LIGHT GAUGE STEEL MEMBERS, IN THEIR END US, SHALL MEET OR EXCEED THE MINIMUM BASE METAL THICKNESS SPECIFIED ABOVE. THE MATERIAL GAUGE DESIGNATION SHALL BE USED AS REFERENCE ONLY. SPECIFIED STEEL TUBE THICKNESSES ARE MINIMUM. THICKER TUBES MAY BE USED.

LIGHT GAUGE STEEL TUBE PROPERTIES
SCALE: 3/8"=1'-0" | 4

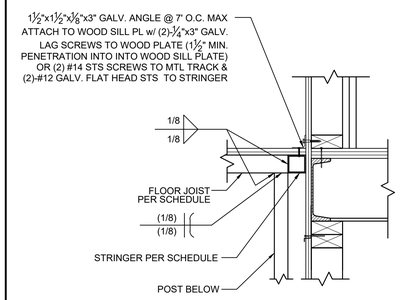

LANDING ATTACHMENT DETAIL
SCALE: 3/8"=1'-0" | 5

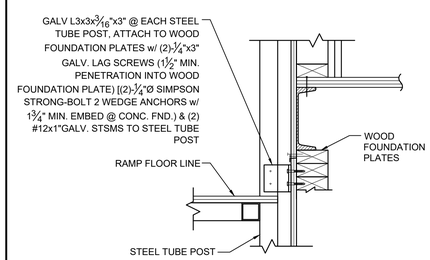

RAMP CONNECTION DETAIL
SCALE: 3/8"=1'-0" | 6

11B-505.8 SURFACES
HANDRAIL GRIPPING SURFACES AND ANY SURFACES ADJACENT TO THEM SHALL BE FREE OF SHARP OR ABRASIVE ELEMENTS AND SHALL HAVE ROUNDED EDGES.

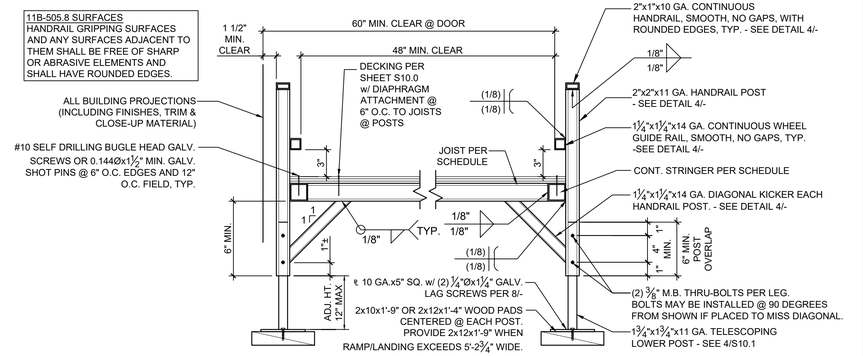

HANDRAIL & RAMP SECTION
SCALE: 3/8"=1'-0" | 7

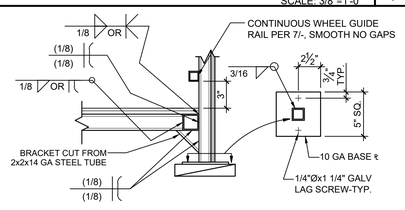

POST @ LOWER END

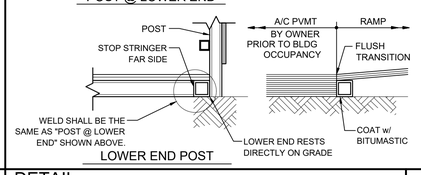

LOWER END POST

DETAIL
SCALE: 3/8"=1'-0" | 8

NOTE:
THE ZERO CLEARANCE RAMP LAYOUT IS AN OPTIONAL METHOD ONLY. IT MUST BE APPROVED IN WRITING, IF AMS IS TO PROVIDE THIS OPTION. ARCHITECT/OWNER MUST TAKE INTO ACCOUNT VARYING SITE CONDITIONS, GRADE CHANGES, BUILDING SEPARATION, ETC.

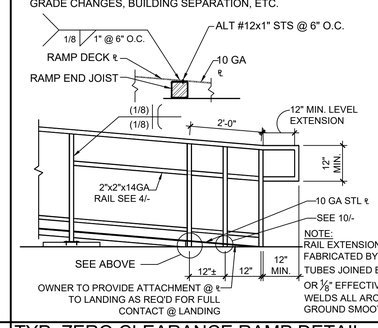

NOTE:
RAIL EXTENSION SHALL BE FABRICATED BY MITER CUT TUBES JOINED BY ⅛" FILLET OR ⅛" EFFECTIVE BUTT WELDS ALL AROUND w/ FINISH GROUND SMOOTH.

TYP. ZERO CLEARANCE RAMP DETAIL
SCALE: 3/8"=1'-0" | 9

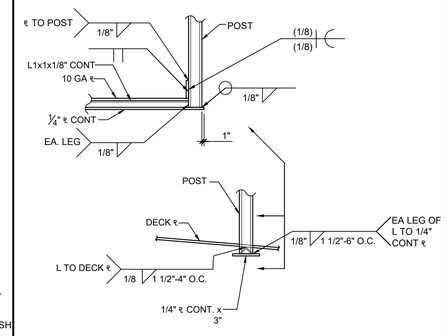

DETAIL
SCALE: 3/8"=1'-0" | 10

1. STEEL IN CONTACT WITH GROUND OR PT WOOD FOUNDATION PLATE SHOULD BE GALVANIZED.

GENERAL CONNECTION NOTES

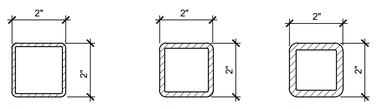

HSS 2x2x1/8

ASTM A500 GRADE B
Fy = 46 KSI
A = 0.840 IN^2
Sx = 0.4863 IN^3
Ix = 0.486 IN^4

HSS 2x2x3/16

ASTM A500 GRADE B
Fy = 46 KSI
A = 1.19 IN^2
Sx = 0.641 IN^3
Ix = 0.641 IN^4

HSS 2x2x1/4

ASTM A500 GRADE B
Fy = 46 KSI
A = 1.51 IN^2
Sx = 0.747 IN^3
Ix = 0.747 IN^4

MATERIAL SHALL BE GIVEN A RUST INHIBITIVE COATING

HSS PROPERTIES
11

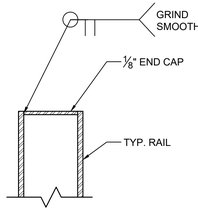

NOTE: END CAP MAY ALSO BE PLASTIC SNAP-ON CAP

END CAP DETAIL
SCALE: N.T.S. | 12

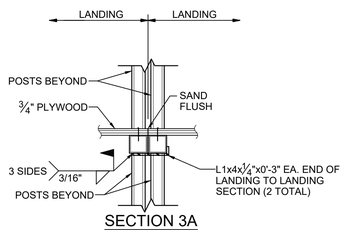

SECTION 3A

LANDING TO LANDING CONNECTION
SCALE: 3/8" = 1'-0" | 13

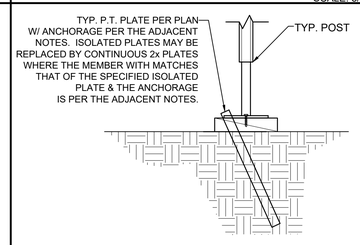

P.T. PLATE ANCHORAGE (ISOLATED PLATES)
ON SOIL, A/C OR CONCRETE PAVING
1"Ø STANDARD WEIGHT (1.315 ACTUAL O.D.) HOT DIPPED GALV. PIPE PER PLATE w/ 12" MIN. PENETRATION MEASURED VERTICALLY BELOW SOIL OR PAVING SURFACE. DRILL PLATE 1 ⅜"Ø MAX. PIPE MAY BE DRIVEN MAX. PIPE MAY BE DRIVEN MAX 45° ANGLE TO VERTICAL.

ALTERNATE ON CONC. PAVING ONLY:
(2) SIMPSON SS (STAINLESS STEEL) STRONG-BOLT 2 THRU EA. PLATE w/ 3 ½" MIN. CONC. EMBEDMENT. SEE SHTS. S2.0-S2.3 FOR INSTALLATION REQUIREMENTS.

P.T. PLATE ANCHORAGE (CONTINUOUS PLATES)
ON SOIL, A/C OR CONCRETE PAVING
1"Ø STANDARD WEIGHT (1.315 ACTUAL O.C.) HOT DIPPED GALV. PIPE @ 4'-0" O.C. MAX. w/ 12" MIN. PENETRATION MEASURED VERTICALLY BELOW SOIL OR PAVING SURFACE. PROVIDE A MIN. OF (2) PIPE ANCHORS FOR ANY SECTION OF PLATE. DRILL PLATE 1 ⅜"Ø MAX. PIPE MAY BE DRIVEN MAX 45° ANGLE TO VERTICAL.

ALTERNATE ON CONC. PAVING ONLY:
SIMPSON SS (STAINLESS STEEL) STRONG-BOLT 2 THRU PLATE @ 3'-0" O.C. MAX. w/ 3 ½" MIN. CONC. EMBEDMENT. PROVIDE A MIN. OF (2) ANCHORS FOR ANY SECTION OF PLATE. SEE SHTS. S2.0-S2.3 FOR INSTALLATION REQUIREMENTS.

P.T PLATE ANCHORAGE
SCALE: 3/8" = 1'-0" | 14

IDENTIFICATION STAMP
DIV. OF THE STATE ARCHITECT
APP: 04-125522 INC:
REVIEWED FOR
SS ☑ FLS ☑ ACS ☑
DATE: 08/19/2026

American Modular Systems
787 Spreckels Ave., Manteca, CA 95336
Phone (209) 825-1921 Fax (209) 825-7018
www.americanmodular.com

INTELLECTUAL-PROPERTY & PROPRIETARY RIGHTS STATEMENT
COPYRIGHT © AMERICAN MODULAR SYSTEMS (AMS)
AMS OWNS ALL COPYRIGHT AND OTHER INTELLECTUAL-PROPERTY AND PROPRIETARY RIGHTS IN THESE DRAWINGS, SPECIFICATIONS, AND THE MATERIAL CONTAINED HEREIN. CERTAIN ELEMENTS SHOWN IN THESE DOCUMENTS ARE REGISTERED TRADEMARKS OF AMS. ALL PATENTABLE MATERIALS CONTAINED IN THESE DOCUMENTS AND ORIGINATING WITH AMS WILL REMAIN THE SOLE PROPERTY OF AMS. THESE DRAWING, SPECIFICATIONS AND THE MATERIAL CONTAINED HEREIN MAY NOT BE REPRODUCED, TRANSMITTED, COPIED, DISTRIBUTED, MODIFIED, OR OTHERWISE DISPOSED OF (DIRECTLY OR INDIRECTLY) AND MAY NOT BE USED (IN WHOLE OR IN PART) TO ASSIST IN THE CONSTRUCTION, DESIGN, OR OTHER MAKING OF, OR FOR THE PURPOSE OF FURNISHING ANY INFORMATION FOR THE CONSTRUCTION, DESIGN, OR OTHER MAKING OF, ANY BUILDINGS (MODULAR OR OTHERWISE), DRAWINGS, SPECIFICATIONS, PRINTS, APPARATUS, OR PARTS THEREOF, EXCEPT AS EXPRESSLY PERMITTED BY WRITTEN CONSENT OF, OR IN A WRITTEN AGREEMENT WITH, AMS. SUBMITTAL OR DISTRIBUTION TO MEET OFFICIAL REGULATORY REQUIREMENTS WILL NOT BE CONSTRUED AS PUBLICATION IN DEROGATION OF AMS'S COPYRIGHT OR OTHER INTELLECTUAL-PROPERTY OR PROPRIETARY RIGHTS.

PRE-CHECKED SET NAME
30' x 32' THRU 60' x 32'
2GO

SITE SPECIFIC PROJECT NAME

APPROVED
DIV. OF THE STATE ARCHITECT
APP: 04-122041 PC
REVIEWED FOR
SS ☑ FLS ☑ ACS ☑ CG ☑
DATE: 04/05/2024

☐ 2022 CBC PRE-CHECK (PC) DOCUMENT
A SEPARATE PROJECT APPLICATION FOR CONSTRUCTION IS REQUIRED.

MANUFACTURER PROFESSIONAL OF RECORD ON PC

LICENSED ARCHITECT
PATRICK DAVIS
No. C12631
Ren. 3-31-27
STATE OF CALIFORNIA

THESE DRAWINGS ARE PRELIMINARY AND NOT FOR CONSTRUCTION UNLESS STAMPED & SIGNED BY THE DESIGN PROFESSIONAL OF RECORD.

REVISIONS
1
2
3
4

DRAWN BY:	A.A.
SCALE:	AS NOTED
DATE:	DD/MM/YY
PROJECT NO:	XXXX-XX

SHEET TITLE:
RAMP DETAILS

SHEET NUMBER:
S10.1-N

AGENCY APPROVAL
File No: ######A\04-125522

STAMPS

CONSULTANT BRANDING

RUHNAU CLARKE ARCHITECTS

NARANCA ES RELOCATABLE CLASSROOM BUILDINGS

NARANCA ELEMENTARY SCHOOL
1030 NARANCA AVE, EL CAJON, CA 92021
CAJON VALLEY UNION SCHOOL DISTRICT

RUHNAU CLARKE ARCHITECTS

3775 TENTH STREET, RIVERSIDE CALIFORNIA 92501 (951) 684 4664 / 5751 PALMER WAY, SUITE C, CARLSBAD CALIFORNIA 92010 (760) 438 5899
801 16TH STREET, SACRAMENTO, CALIFONIA 95814 (916) 379 8111

CONTACT LIST

Owner:
Cajon Valley Union School District
750 E Main Street
El Cajon, CA 92020
Contact: *John Heredia*
heredia@cajonvalley.net
858.228.7935

Contact: *Sharon Dobbins:*
dobbinss@cajonvalley.net
619.588.3016

Architect
Ruhnau Clarke Architects
5751 Palmer Way Suite C.,
Carlsbad, CA 92010
Phone:760.438.5899
Contact: Steve Prince
sprince@ruhnauclarke.com
Contact: Roger Clarke
rclarke@ruhnauclarke.com

Civil
Rick Engineering
1770 Iowa St., Suit 100
Riverside, CA, 92507
Phone: *951.782.0707 ex. 2132*
Contact: *Dennis Armstrong*
dgarmstrong@rickengineering.com

Electrical
Johnson Consulting Engineers,INC.
12875 Brookprinter Place, Suite 300
Poway, CA 92064
Phone: 858.679.4030
Contact: *John Frisbie*
jfrisbie@jce-inc.com

Specifications
Spec Studio
9783 E. Maplewood Ave.
ENGLEWOOD, CO 80111
Phone:909.374.2011
Contact:Richard L. Gonser
specstudio@icloud.com

TYPICAL ABBREVIATIONS

@	AT	INT	INTERIOR	UOS	UNDERSIDE OF STRUCTURE
&	AND				
<	ANGLE	JH	JOIST HANGER		
#	POUND OR NUMBER	JT	JOINT	VC	VINYL COATED
		JST	JOIST	VCB	VENTED COVED BASE
ACP	ACOUSTICAL CEILING PANEL			VCT	VINYL COMPOSITION TILE
ACT	ACOUSTICAL CEILING TILE	L	LIGHT	VERT	VERTICAL
AD	AREA DRAIN	LAM	LAMINATE	VIF	VERIFY IN FIELD
AFF	ABOVE FINISHED FLOOR	LO	LOW	VSF	VINYL SHEET FLOORING
ALUM	ALUMINUM	LT	LIGHT	VTR	VENT THROUGH ROOF
AWP	ACOUSTICAL WALL PANEL	LVR	LOUVER	VWC	VINYL WALL COVERING
		LVT	LUXURY VINYL TILE		
BD	BOARD			W/	WITH
BLKG	BLOCKING	MACH	MACHINE	W/O	WITHOUT
BOS	BOTTOM OF STRUCTURE	MAX	MAXIMUM	WACP	WASHABLE ACOUSTIC CEILING PANEL
BOT	BOTTOM	MANF	MANUFACTURER		
BYND	BEYOND	MECH	MECHANICAL	WAF	WOOD ATHLETIC FLOORING
		MFR	MANUFACTURER		
CAB	CABINET	MH	MANHOLD	WD	WOOD
CBU	CEMENT BACKER UNIT	MIN	MINIMUM	WI	WOODWORKING INSTITUTE
CF	CUBIC FEET	ML	METAL LATH		
CIP	CAST IN PLACE	MO	MASONRY OPENING	WIN	WINDOW
CJ	CONTROL JOINT	MS	METAL STUD	WP	WALL PADDING
CL	CENTERLINE	MTD	MOUNTED	WWF	WELDED WIRE FABRIC
CLF	CHAIN LINK FENCE	MTL	METAL		
CLG	CEILING	MPS	METAL PANEL SYSTEM		
CLR	CLEAR				
CMU	CONCRETE MASONRY UNIT	NIC	NOT IN CONTRACT		
COL	COLUMN	NTS	NOT TO SCALE		
CONC	CONCRETE	NO	NUMBER		
CONT	CONTINUOUS				
CPL	CEMENT PLASTER	OC	ON CENTER		
CPT	CARPET	OD	OUTSIDE DIAMETER		
		OFCI	OWNER FURNISHED/ CONTRACTOR INSTALLED		
DBL	DOUBLE				
DDC	DOUBLE DETECTOR CHECK	OFOI	OWNER FURNUSHED/ OWNER INSTALLED		
DEMO	DEMOLISH OR DEMOLITION				
DET	DETAIL	OH	OPPOSITE HAND/ OVERHEAD		
DF	DRINKING FOUNTAIN				
DIA	DIAMETER	OPNG	OPENING		
DIM	DIMENSION	OPP	OPPOSITE		
DL	DOOR LOUVER	OZ	OUNCE		
DN	DOWN				
DP	DEMOUNTABLE PARTITION	P	PAINT OR PAINTED		
DR	DOOR	PA	PLANTING AREA		
DRF	DOOR FRAME	PCC	PRE-CAST CONCRETE		
DS	DOWN SPOUT	PFIN	PRE FINISHED		
DSA	DIVISION OF STATE ARCHITECT	PIV	POST-INDICATOR VALVE		
		PL	PLATE/PROPERTY LINE		
DWGS	DRAWINGS	PLAM	PLASTIC LAMINATE		
		PLAST	PLASTIC		
(E)	EXISTING	PLUMB	PLUMBING		
EA	EACH	PLWD	PLYWOOD		
EJ	EXPANSION JOINT	PT	PRESSURE TREATED		
EL	ELEVATION	PTD	PAINTED		
ELEV	ELEVATOR	PTN	PARTITION		
ENCL	ENCLOSURE	PVC	POLYVINYL CHLORIDE		
EPDM	ETHYLENE PROPYLENE DIENE M-CLASS (ROOFING)				
		R	RADIUS		
EQ	EQUAL	RB	RUBBER BASE		
EQUIP	EQUIPMENT	RCP	REFLECTED CEILING PLAN		
EW	EACH WAY	RD	ROOF DRAIN		
EWC	ELECTRIC WATER COOLER	REF	REFERENCE		
EXIST	EXISTING	REINF	REINFORCED		
EXT	EXTERIOR	RES	RESINOUS FLOORING		
		REQ	REQUIRED		
FC	FINISH CEILING	RM	ROOM		
FD	FLOOR DRAIN	RO	ROUGH OPENING		
FDC	FIRE DEPARTMENT CONNECTION	RQMT	REQUIREMENT		
		RS	ROLLER SHADE		
FE	FIRE EXTINGUISHER	RT	RUBBER TREAD		
FEC	FIRE EXTINGUISHER CABINET				
		SAF	SYNTHETIC ATHLETIC FLOORING		
FF	FLOOR FINISH/FACTORY FINISH	SB	SPLASH BLOCK		
FFE	FURNISHINGS, FIXTURES, & EQUIPMENT	SC	SOLID CORE		
		SHT	SHEATHING		
FG	FINISH GRADE	SIM	SIMILAR		
FH	FIRE HYDRANT	SPEC	SPECIFICED OR SPECIFICATION		
FHC	FIRE HOSE CABINET				
FIN	FINISH	SS	STAINLESS STEEL		
FLR	FLOOR	SSM	SOLID SURFACE MATERIAL		
FND	FOUNDATION				
FO	FACE OF	STC	SOUND TRANSMISSION COEFFICIENT		
FOF	FACE OF FINISH				
FOM	FACE OF MASONRY	STD	STANDARD		
FOS	FACE OF STUD	ST	STAIN		
FR	FIRE RISER	STL	STEEL		
FRP	FIBERGLASS REINFORCED PANEL	STRUCT	STRUCTURE OR STRUCTURAL		
		SUSP	SUSPENDED		
FS	FINISH SURFACE	SV	SHEET VINYL FLOORING		
FURN	FURNISH/FURNITURE				
		T	TILE		
G	GROUT	TB	TACK BOARD		
GA	GAUGE	TC	TOP OF CONCRETE CURB		
GALV	GALVANIZED	TEL	TELEPHONE		
GB	GRAB BAR	TEMP	TEMPORARY		
GL	GLASS	T&G	TONGUE AND GROOVE		
GLULAM	GLUE LAMINATED	TJ	TOOLED JOINT		
GWB	GYPSUM WALLBOARD	TO	TOP OF		
GWWB	WATER RESISTANT GWB	TOC	TOP OF CONCRETE/TOP OF CANOPY		
H	HIGH				
HC	HOLLOW CORE	TOD	TOP OF DRAIN		
HDW	HARDWARE	TOP	TOP OF PARAPET		
HM	HOLLOW METAL	TOR	TOP OF ROOF		
HORIZ	HORIZONTAL	TOS	TOP OF SHEATHING		
HP	HIGH POINT	TOW	TOP OF WALL		
HR	HOUR	TS	TUBE STEEL		
HT	HEIGHT	TSB	TOP SET BASE		
HVAC	HEATING, VENTILATING, AND AIR CONDITIONING	TPD	TOILET PAPER DISPENSER		
		TWP	TACKABLE WALL PANEL		
		TYP	TYPICAL		
ICB	INTEGRAL COVED BASE				
ID	INSIDE DIAMETER	UC	UNDERCUT/UNDER COUNTER		
IGU	INSULATED GLAZING UNIT				
ILO	IN LIEU OF	UNO	UNLESS NOTED OTHERWISE		
INSUL	INSULATION				

GENERAL NOTES

1. THE CONTRACTOR IS SOLELY RESPONSIBLE FOR MEANS, METHODS, SEQUENCE, TECHNIQUES OR PROCEDURES NECESSARY FOR PERFORMING, SUPERINTENDING OR COORDINATING ALL PORTIONS OF THE WORK OF CONSTRUCTION IN ACCORDANCE WITH THE CONTRACT DOCUMENTS AND ANY HEALTH OR SAFETY PRECAUTIONS REQUIRED BY ANY REGULATORY AGENCIES.
2. THE CONTRACTOR SHALL COMPLY WITH CALIFORNIA FIRE CODE, CHAPTER 33 FOR FIRE SAFETY DURING CONSTRUCTION.
3. CONTRACTOR WILL BE REQUIRED TO PROVIDE AND INSTALL ALL EQUIPMENT AND RELATED ITEMS AS SHOWN IN THESE DOCUMENTS AND AS SPECIFIED. IT SHALL BE THE CONTRACTOR'S RESPONSIBILITY TO VERIFY ALL EXISTING CONDITIONS IN THE FIELD PRIOR TO BID AND TO DETERMINE THE WORK NECESSARY TO COMPLETE THE PROJECT.
4. ALL WORK SHALL CONFORM TO 2025 TITLE 24, CALIFORNIA CODE OF REGULATIONS (C.C.R.).
5. FABRICATION AND INSTALLATION OF DEFERRED SUBMITTAL ITEMS SHALL NOT BE STARTED UNTIL CONTRACTOR'S DRAWINGS, SPECIFICATIONS, AND ENGINEERING CALCULATIONS FOR THE ACTUAL SYSTEMS TO BE INSTALLED HAVE BEEN ACCEPTED AND SIGNED BY THE ARCHITECT OR STRUCTURAL ENGINEER AND APPROVED BY THE DSA. LIST DEFERRED SUBMITTAL ITEMS FOR THIS PROJECT.
6. CHANGES TO THE APPROVED DRAWINGS AND SPECIFICATIONS SHALL BE MADE BY AN ADDENDUM OR A CONSTRUCTION CHANGE DOCUMENT (CCD) APPROVED BY THE DIVISION OF THE STATE ARCHITECT, AS REQUIRED BY SECTION 4-338, PART 1, TITLE 24, CCR.
7. A "DSA CERTIFIED" PROJECT INSPECTOR, EMPLOYED BY THE DISTRICT (OWNER) AND APPROVED BY THE DIVISION OF THE STATE ARCHITECT, SHALL PROVIDE CONTINUOUS INSPECTION OF THE WORK. THE DUTIES OF THE INSPECTOR ARE DEFINED IN SECTION 4-342, PART 1, TITLE 24, CCCR. A MINIMUM CLASS **3** INSPECTOR IS REQUIRED.
8. A DSA ACCEPTED TESTING LABORATORY DIRECTLY EMPLOYED BY THE DISTRICT (OWNER) SHALL CONDUCT ALL THE REQUIRED TESTS AND INSPECTIONS FOR THE PROJECT.
9. THE INTENT OF THESE DRAWINGS AND SPECIFICATIONS IS THAT THE WORK OF THE ALTERATION, REHABILITATION OR RECONSTRUCTION IS TO BE IN ACCORDANCE WITH TITLE 24, CCR. SHOULD ANY EXISTING CONDITIONS SUCH AS DETERIORATION OR NON-COMPLYING CONSTRUCTION BE DISCOVERED WHICH IS NOT COVERED BY THE CONTRACT DOCUMENTS WHEREIN THE FINISHED WORK WILL NOT COMPLY WITH TITLE 24, CCR, A CONSTRUCTION CHANGE DOCUMENT (CCD), OR A SEPARATE SET OF PLANS AND SPECIFICATIONS, DETAILING AND SPECIFYING THE REQUIRED WORK SHALL BE SUBMITTED TO AND APPROVED BY DSA BEFORE PROCEEDING WITH THE WORK. (SECTION 4-317(C), PART 1, TITLE 24, CCR).
10. THE ARCHITECT OF RECORD SHALL HAVE THE RIGHT TO MAKE FINAL JUDGMENTS RELATIVE TO SUBMITTAL DRAWING REVISIONS IN ORDER TO ENSURE COMPLIANCE WITH ENGINEERING STANDARDS, APPLICABLE CODES, AND ARCHITECTURAL INTENT.
11. CONTRACTOR SHALL VERIFY ALL DIMENSIONS AND LOCATIONS OF EXISTING CONDITIONS ON THE JOB SITE PRIOR TO THE START OF ANY WORK. NOTIFY THE ARCHITECT IMMEDIATELY OF ANY DISCREPANCIES BETWEEN ACTUAL FIELD CONDITIONS AND CONSTRUCTION DOCUMENTS. EXISTING CONDITIONS ARE INDICATED AS A RESULT OF INFORMATION SHOWN ON AVAILABLE DOCUMENTS. ANY DAMAGE TO EXISTING CONDITIONS IS THE SOLE RESPONSIBILITY OF THE CONTRACTOR.
12. THE EXISTENCE OR LOCATION OF ANY UNDERGROUND UTILITIES, PIPES, OR STRUCTURE SHOWN ON THESE PLANS WERE OBTAINED BY A SEARCH OF AVAILABLE RECORDS. TO THE BEST OF OUR KNOWLEDGE, EXISTING UTILITIES ARE AS SHOWN ON THESE PLANS. THE CONTRACTOR SHALL ASCERTAIN THE TRUE VERTICAL AND HORIZONTAL LOCATION AND SIZE OF ALL UNDERGROUND UTILITIES AND SHALL BE RESPONSIBLE FOR DAMAGE TO ANY PUBLIC OR PRIVATE UTILITIES SHOWN OR NOT SHOWN HEREON.
13. THE CONTRACTOR SHALL BE SOLELY RESPONSIBLE FOR ADEQUACY AND SAFETY OF THE DESIGN/ERECTION OF BRACING, SHORING, TEMPORARY SUPPORTS AND SCAFFOLDING.
14. UNDER NO CIRCUMSTANCE SHALL WORKING DIMENSIONS BE SCALED FROM PLANS, SECTIONS, OR DETAILS ON THE DRAWINGS.
15. ALL STANDARDS, MATERIALS AND WORKMANSHIP SHALL COMPLY WITH THE STATE BUILDING CODES, ORDINANCES, REGULATIONS, AND LAWS.
16. WHERE ANY CONFLICT OCCURS BETWEEN THE REQUIREMENTS OF FEDERAL, STATE AND LOCAL LAWS, CODES, ORDINANCES, RULES AND REGULATIONS, THE MOST STRINGENT SHALL GOVERN.
17. ITEMS MARKED "TYP." OR "TYPICAL" SHALL APPLY IN ALL CASES UNLESS SPECIFICALLY INDICATED OTHERWISE.
18. THE CONTRACTOR SHALL BE RESPONSIBLE FOR COORDINATION OF REQUIREMENTS BETWEEN THE DISCIPLINES (ARCHITECTURAL, STRUCTURAL, PLUMBING, MECHANICAL, AND ELECTRICAL, ETC.) AND BETWEEN DRAWING AND SPECIFICATION IN ORDER TO ENSURE THAT ALL ITEMS SHOWN IN RELATIONSHIP TO ONE ANOTHER OR SHOWN IN MULTIPLE LOCATIONS ARE IN AGREEMENT. THE CONTRACTOR SHALL IMMEDIATELY NOTIFY THE ARCHITECT REGARDING ANY DISCREPANCIES, ERRORS, OMISSIONS OR INCONSISTENCIES AND SHALL NOT PROCEED WITH THE WORK UNTIL CLARIFICATION HAS BEEN ISSUED BY THE ARCHITECT.
19. GRADING PLANS DRAINAGE IMPROVEMENTS, ROAD & ACCESS REQUIREMENTS AND ENVIRONMENTAL HEALTH CONSIDERATIONS SHALL COMPLY WITH ALL LOCAL ORDINANCES. INSPECTOR OF RECORD (IOR CLASSIFICATION 1).
20. ALL CONSTRUCTION AND DEMOLITION SHALL BE IN ACCORDANCE WITH CHAPTER 33 OF THE CBC AND CFC, AND THE WRITTEN SITE FIRE SAFETY PLAN. THE FIRE SAFETY PLAN WILL BE SUBMITTED WITH THE DSA-102IC. REFER TO DSA BULLETIN BU 24-05. PLEASE SEE SPECIFICATION SECTION **01 70 00** FOR ADDITIONAL INFORMATION.

NOTE:
THE INTENT OF THESE DRAWINGS AND SPECIFICATIONS IS THAT THE WORK OF THE ALTERATION, REHABILITATION OR RECONSTRUCTION IS TO BE IN ACCORDANCE WITH TITLE 24, CCR. SHOULD ANY EXISTING CONDITIONS SUCH AS DETERIORATION OR NON-COMPLYING CONSTRUCTION BE DISCOVERED WHICH IS NOT COVERED BY THE CONTRACT DOCUMENTS WHEREIN THE FINISHED WORK WILL NOT COMPLY WITH TITLE 24, CCR, A CONSTRUCTION CHANGE DOCUMENT (CCD), OR A SEPARATE SET OF PLANS AND SPECIFICATIONS. DETAILING AND SPECIFYING THE REQUIRED WORK SHALL BE SUBMITTED TO AND APPROVED BY DSA BEFORE PROCEEDING WITH THE WORK. (SECTION 4-317(C), PART 1, TITLE 24, CCR).

REGIONAL MAP

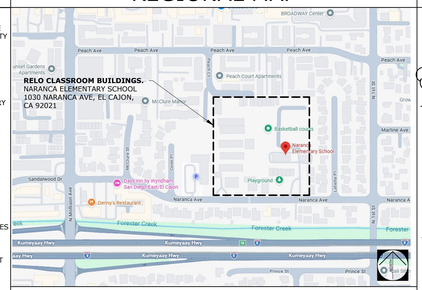

SITE MAP

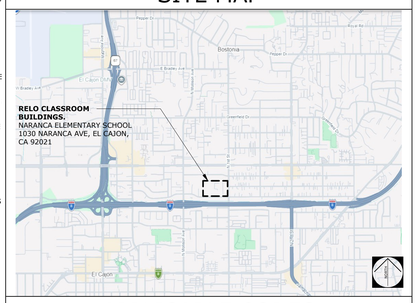

APPLICABLE CODES

PARTIAL LIST OF APPLICABLE CODES:
2025 CALIFORNIA ADMINISTRATIVE CODE, PART 1, TITLE 24 C.C.R.
2025 CALIFORNIA BUILDING CODE (CBC), PART 2, TITLE 24 C.C.R.
2025 CALIFORNIA ELECTRICAL CODE (CEC), PART 3, TITLE 24 C.C.R.
2025 CALIFORNIA MECHANICAL CODE (CMC) PART 4, TITLE 24 C.C.R.
2025 CALIFORNIA PLUMBING CODE (CPC), PART 5, TITLE 24 C.C.R.
2025 CALIFORNIA ENERGY CODE, PART 6, TITLE 24 C.C.R.
2025 CALIFORNIA WILDLAND-URGAN INTERFACE CODE (CWUIC), PART 7, TITLE 24 C.C.R.
2025 CALIFORNIA FIRE CODE (CFC), PART 9, TITLE 24 C.C.R.
2025 CALIFORNIA EXISTING BUILDING CODE (CEBC), PART 10, TITLE 24 C.C.R.
2025 CALIFORNIA GREEN BUILDING STANDARDS CODE (CALGREEN), PART 11, TITLE 24 C.C.R.
2025 CALIFORNIA REFERENCED STANDARDS, PART 12, TITLE 24 C.C.R.
TITLE 19 C.C.R., PUBLIC SAFETY, STATE FIRE MARSHAL REGULATIONS.

APPLICABLE STANDARDS
FOR A LIST OF APPLICABLE STANDARDS, INCLUDING CALIFORNIA AMENDMENTS TO THE NFPA STANDARDS, REFER TO CBC CHAPTER 35 AND CFC CHAPTER 80.

APPLICABLE AGENCIES

STATE OF CALIFORNIA

DEPARTMENT OF GENERAL SERVICES
DIVISION OF THE STATE ARCHITECT
10920 VIA FRONTERA ROAD, STE. 300
SAN DIEGO, CA 92127
TEL: (858) 674-5400

SHEET INDEX

GENERAL
G-1 TITLE SHEET & SHEET INDEX

CIVIL
C-01 TITLE SHEET
C-02 SITE PLAN
C-03 DETAIL SHEET
~~LOCATE ALL PLANS~~
~~AS-2.0 OVERALL SITE PLAN~~
~~AS-3.0 ENLARGED SITE PLANS & SITE DETAILS~~
~~ASD-1.0 SITE DETAILS~~
~~ASD-2.0 SITE DETAILS~~

ARCHITECTURE
A1-1.1 24" X 40" RELO FLOOR PLAN
A1-1.2 30" X 32" RELO FLOOR PLAN
A1-1.0 12" X 40" RELO FLOOR PLAN
~~AD-1.2 ACCESSIBILITY & MISC. DETAILS~~

ELECTRICAL
~~E1.0 ELECTRICAL LEGEND AND NOTES~~
~~E1.1 OVERALL SITE PLAN~~
~~E1.2 ELECTRICAL DETAILS~~
~~E2.0 TITLE 24 FORMS:~~
E3.1 FLOOR PLAN - POWER
E3.2 ONE LINE DIAGRAM AND PANEL SCHEDULE
E4.0 COMMUNICATION LEGEND AND NOTES
E4.1 FLOOR PLAN - COMM.
E4.2 COMMUNICATION DETAILS
E4.3 COMMUNICATION DETAILS
E4.4 COMMUNICATION DETAILS
E4.5 AUDIO VISUAL DETAILS
E4.6 AUDIO VISUAL DETAILS
E5.1 FLOOR PLAN - FIRE ALARM
E5.2 FIRE ALARM SCHEDULE AND NOTES
E5.3 FIRE ALARM RISER DIAGRAM AND CALCS

DWG_V1 (12x40) AMS 02-124199
TS TITLE SHEET
A1.0 TYPICAL FLOOR PLAN
A1.2 RESTROOM FLOOR PLAN
S1.0 CONCRETE FOUNDATION PLAN CONCRETE FLOORS (100 PSF MAX FLOOR LIVE LOAD)
S1.4 CONCRETE FOUNDATION DETAILS
S1.5 CONCRETE FOUNDATION DETAILS
S1.6C DOUBLE PLATE ANCHORAGE FOUNDATION DETAILS
S1.7 CONCRETE FOUNDATION OPTIONAL UTILITIES CHANNELS IN FOOTINGS
S2.0 WOOD FOUNDATION PLAN & DETAILS - PLYWOOD FLOORS ONLY - 100 PSF MAX FLOOR L.L.
S10.0 TYPICAL RAMP PLANS & NOTES
S10.1 RAMP DETAILS
P3.0 PLUMBING ISOMETRICS DRAWINGS

DWG_V1 (24x40) AMS 02-124200
TS-M TITLE SHEET
A1.0-M TYPICAL FLOOR PLAN
A2.2-M TYPICAL ROOF DETAIL METAL STANDING SEAM
S2.1-M WOOD FOUNDATION PLAN 50 PSF LIVE LOAD + 15 PSF PARTITION LOAD
S2.4-M WOOD FOUNDATION DETAILS
S3.0-M FLOOR FRAMING PLAN & DETAILS FOR PLYWOOD FLOOR
S4.2-M ROOF FRAMING DETAILS
S10.0-M TYPICAL RAMP PLANS & NOTES
S10.1-M RAMP DETAILS
M1.0-M TYPICAL REFLECTED CEILING PLAN

DWG_V1 (30x32) AMS 02-124191
TS-N TITLE SHEET
A1.0 -N CLASSROOM FLOOR PLAN
S3.0 -N FLOOR FRAMING PLAN & DETAILS FOR PLYWOOD FLOOR
S4.2 -N ROOF FRAMING DETAILS
S10.0 -N TYPICAL RAMP PLANS & NOTES
S10.1 -N RAMP DETAILS
TOTAL SHEET COUNT: 66

1
CCD

DSA 1

APPLICATION FOR APPROVAL OF PLANS AND SPECIFICATIONS

Please print or type all information or you may complete online and print for signatures. All fields must be filled in per instructions (see page 5).

1. Name of Facility: Naranca ES
2. School District (or State Agency): Cajon Valley USD
   District/Agency Mailing Address: 750 E. Main St., El Cajon, Ca. 92020
3. Dist. Superintendent: Dr. David Miyashiro
   Work Email: miyashirod@cajonvalley.net Work Phone: (619) 588-3016
4. Facilities Director: Eric Johnston Title: Facilities Director
   Work Email: johnstone@cajonvalley.net Work Phone: (619) 588-3181

APPLICATION PURPOSE: *(Check applicable box and provide application number where required.)*
A.1 ☐ Initial Registration for Project Submittal *(DSA will create new application number).*
A.2 ☐ Revised Registration for Project Submittal. DSA Application #: _____
A.3 ☑ Project Submittal. Is the project registered? ☐ Yes ☐ No, If yes, then DSA Application # is 04-125522

PROJECT SCOPE: *(For questions 5-10, please provide specific building names per instructions.)*
5. Construction of: _____
5a. Design of Pre-Check (PC) Structure for: _____
6. Addition to: _____
7. Relocation of: Stockpile (1) 24x40 CR Bldg, (1) 12x40 CR. Bldg, (2) 30x32 CR Bldgs, (1) 12x24 RR Bldg
8. Alteration to: Associated Site Work
9. Rehabilitation of: _____
   DSA EDCR Application Number (required): _____
10. Reconstruction of: _____

DSA USE ONLY					
	FEE $CHED.	CORRECT FEE	FEE PAID	UP/OP	REFUND
AC					
SS					
FLS					
DSA FILE NO.	DSA APP. NO.	DATE ASSIGNED	ESTIMATED COST	LANDSCAPE IRRIGATION	
			1,000,000.00		

DGS DSA 1 (Revised 11/24/25) DEPARTMENT OF GENERAL SERVICES Page 1 of 8 STATE OF CALIFORNIA
DIVISION OF THE STATE ARCHITECT

SCOPE OF WORK

1. PLACEMENT OF (1) NEW 24'X40' STOCKPILE CLASSROOM BUILDING (44) PER A# 02-124190, 960 SQ. FT.
2. PLACEMENT OF (2) NEW 30'X32' STOCKPILE CLASSROOM BUILDING (27B,27C) PER A# 02-124191, 2,880 SQ. FT.
3. INSTALLATION OF (1) NEW 12'X40' STOCKPILE RESTROOM BUILDING (RR) PER A# 02-124199, 480 SQ. FT.
4. PLACEMENT OF (1) NEW 12'X40' STOCKPILE CLASSROOM BUILDING (27D) PER A# 02-124199, 480 SQ. FT.
5. MINOR SITE IMPROVEMENTS
   a) Accessible gates
   b) Ramp Landings
   c) Detectable warning surface
   d) Paving @ Stockpiles

STATEMENT OF GENERAL CONFORMANCE

FOR ARCHITECT/ENGINEERS WHO UTILIZE PLANS, INCLUDING BUT NOT LIMITED TO SHOP DRAWINGS, PREPARED BY OTHER LICENSED DESIGN PROFESSIONALS AND/OR CONSULTANTS

APPLICATION NO: 04-125522

FILE NO: 1-16-21

THE DRAWINGS IDENTIFIED AS FOLLOWS:

☐ ALL DRAWING SHEETS INCLUDED IN THIS SET NOT BEARING MY STAMP AND SIGNATURE.

☐ DRAWING SHEETS DENOTED IN THE SHEET INDEX AS FOLLOWS: _____

☐ DRAWING SHEETS INCLUDED UNDER THE FOLLOWING PC APPROVAL(S): _____

HAVE BEEN PREPARED BY OTHER DESIGN PROFESSIONALS OR CONSULTANTS WHO ARE LICENSED AND AUTHORIZED TO PREPARE SUCH DRAWINGS (PLANS) IN THIS STATE. THEY HAVE BEEN EXAMINED BY ME FOR:

1) DESIGN INTENT AND APPEAR TO MEET THE APPROPRIATE REQUIREMENTS OF TITLE 24, CALIFORNIA CODE OF REGULATIONS AND THE PROJECT SPECIFICATIONS PREPARED BY ME, AND

2) COORDINATION WITH MY DRAWINGS (PLANS) AND SPECIFICATINOS AND ARE ACCEPTABLE FOR INCORPORATION INTO THE CONTRUCTION OF THIS PROJECT.

PER TITLE 24, PART 1, SECTION 4-316(b): THIS STATEMENT OF GENERAL CONFORMANCE SHALL NOT BE CONSTRUED AS RELIEVING ME OF MY RIGHTS, DUTIES, AND RESPONSIBILITIES UNDER SECTIONS 17302 AND 81138 OF THE EDUCATION CODE AND SECTIONS 4-336, 4-341 AND 4-344 OF TITLE 24, PART 1.

SIGNATURE _____ DATE _____

ROGER CLARKE	**C-21340**	**10-31-25**
PRINT NAME	LICENSE NUMBER	EXPIRATION DATE

GENERAL INSPECTION NOTES

THE CALIFORNIA ENERGY CODE SECTION 10-103 REQUIRES ACCEPTANCE TESTING ON ALL NEWLY INSTALLED LIGHTING CONTROLS, MECHANICAL SYSTEMS, ENVELOPES, AND PROCESS EQUIPMENT AFTER INSTALLATION AND BEFORE PROJECT COMPLETION. AN ACCEPTANCE TEST IS A FUNCTIONAL PERFORMANCE TEST TO HELP ENSURE THAT NEWLY INSTALLED EQUIPMENT IS OPERATING AND IN COMPLIANCE WITH THE ENERGY CODE.

LIGHTING CONTROLS ACCEPTANCE TESTS MUST BE PERFORMED BY A CERTIFIED LIGHTING CONTROLS ACCEPTANCE TEST TECHNICIAN (ATT).

MECHANICAL SYSTEM ACCEPTANCE TESTS MUST BE PERFORMED BY A CERTIFIED MECHANICAL ATT FOR PROJECTS SUBMITTED ON OR AFTER OCTOBER 1, 2021.

ENVELOPE AND PROCESS EQUIPMENT ACCEPTANCE TESTS SHALL BE PERFORMED BY THE INSTALLING CONTRACTOR, ENGINEER/ARCHITECT OF RECORD OR THE OWNER'S AGENT.

A LISTING OF CERTIFIED ATT CAN BE FOUND AT: HTTPS://WWW.ENERGY.CA.GOV/PROGRAMS-AND-TOPICS/PROGRAMS/ACCEPTANCE-TEST-TECHNICIAN-CERTIFICATION-PROVIDER-PROGRAM/ACCEPTANCE.

THE ACCEPTANCE TESTING PROCEDURES MUST BE REPEATED, AND DEFICIENCIES MUST BE CORRECTED BY THE BUILDER OR INSTALLING CONTRACTOR UNTIL THE CONSTRUCTION/INSTALLATION OF THE SPECIFIED SYSTEMS CONFORM AND PASS THE REQUIRED ACCEPTANCE CRITERIA.

PROJECT INSPECTORS WILL COLLECT THE FORMS TO CONFIRM THAT THE REQUIRED ACCEPTANCE TESTS HAVE BEEN COMPLETED.

ARCHITECTURAL SYMBOLS

BUILDING SECTION
DIRECTION OF VIEW CUT
DIRECTION OF VIEW
VIEW ON SHEET — 1 / A101 — SIM
SHEET ON WHICH DETAIL OCCURS

EXTERIOR ELEVATION
DIRECTION OF VIEW
VIEW ON SHEET — 1 / A101 — SIM
SHEET ON WHICH DETAIL OCCURS

DETAIL REFERENCE TO DRAWINGS
VIEW ON SHEET
SHEET ON WHICH DETAIL OCCURS — 1 / A101 — SIM
DIRECTION OF VIEW

ROOM TAGS
ROOM NAME — Room name
ROOM NUMBER — 1001

RCP ROOM TAGS
CEILING HEIGHT A.F.F. — ROOM NAME 101 / 12'-0"

EGRESS ROOM TAGS
OCCUPANT LOAD — Room name 1001 / Room Area # ###
OCCUPANT LOAD FACTOR

KEYNOTE
CONSTRUCTION KEY NOTE — X.X
NUMBER — X
ASSOCIATED DETAIL REFERENCE — 1 / A101 — SIM

CASEWORK IDENTIFICATION:
DEPTH
HEIGHT — 60
INDICATES SPECIAL CONDITION — 102
W.I.C. NUMBER
LENGTH
LOCK — M=REVERSE
EXPLANATION OF SPECIAL CONDITION IF NEEDED

DOOR TAG
DOOR TAG — 101A
DOOR RATING — 20 MIN.

WINDOW TAG
WINDOW TAG — A

INTERIOR ELEVATION
INTERIOR ELEVATION VIEW — 101-1
SHEET ON WHICH INTERIOR ELEVATION OCCURS — 101-4 / A1-7.1 / 101-3 — 101-2

NARANCA ES RELOCATABLE CLASSROOM BUILDINGS:

PROJECT No. :1-16-21
9/9/2026 5:22:41 PM

DRAWN BY: CHECKED BY:
DELTA # ____ DATE ____ ☐ ADD ☐ AFO ☐ CCD ☐ REV
DELTA # ____ DATE ____ ☐ ADD ☐ AFO ☐ CCD ☐ REV
DELTA # ____ DATE ____ ☐ ADD ☐ AFO ☐ CCD ☐ REV
DELTA # ____ DATE ____ ☐ ADD ☐ AFO ☐ CCD ☐ REV

RUHNAUCLARKE.COM

NARANCA ES RELOCATABLE CLASSROOM BUILDINGS
NARANCA ELEMENTARY SCHOOL
1030 NARANCA AVE, EL CAJON, CA 92021
CAJON VALLEY UNION SCHOOL DISTRICT

TITLE SHEET & SHEET INDEX

G-1

1-16-21

NARANCA ELEMENTARY SCHOOL
RELOCATABLE CLASSROOM BUILDINGS
EL CAJON, CA

GENERAL

1. ALL WORK SHALL BE IN ACCORDANCE WITH THESE PLANS, THE PROJECT SPECIFICATIONS, THE GEOTECHNICAL ENGINEER'S REPORT, THE STANDARD SPECIFICATIONS FOR PUBLIC WORKS CONSTRUCTION ("GREEN BOOK"), AND THE 2026 CALIFORNIA BUILDING CODE. ALL REFERENCE SPECIFICATIONS AND STANDARDS SHALL BE THE LATEST EDITION UNLESS OTHERWISE NOTED.
2. WHEN A TECHNICAL CONFLICT IS FOUND TO EXIST IN THE CONTRACT DOCUMENTS THAT CAN NOT BE RESOLVED BY REFERENCE TO PRECEDENCE PROVISIONS IN THE "GREEN BOOK", THE CONTRACTOR SHALL IMMEDIATELY REPORT SAID CONFLICT TO THE ENGINEER FOR RESOLUTION.
3. ALL MATERIALS AND METHODS ARE SUBJECT TO THE APPROVAL OF THE ENGINEER.
4. OFF-SITE CONSTRUCTION PERMITS SHALL BE OBTAINED BY THE CONTRACTOR FROM THE AGENCY HAVING JURISDICTION (AHJ).
5. ALL WORK UNDER THIS GRADING PERMIT SHALL BE LIMITED TO WORK WITHIN THE PROPERTY LINES. ALL WORK WITHIN THE ROAD RIGHT-OF-WAY WILL REQUIRE SEPARATE PLANS AND A SEPARATE REVIEW/APPROVAL (PERMIT) FROM THE AGENCY HAVING JURISDICTION.
6. NO MATERIAL OR EQUIPMENT SHALL BE STORED IN THE PUBLIC RIGHT OF WAY WITHOUT OBTAINING A SEPARATE PERMIT FOR THAT PURPOSE.
7. THE CONTRACTOR SHALL NOT OPERATE ANY FIRE HYDRANT OR WATER MAIN VALVES WITHOUT APPROPRIATE AGENCY AUTHORIZATION. CONTRACTOR SHALL COORDINATE WITH THE APPROPRIATE WATER COMPANY FOR VALVE OPERATION AND WATER REQUIREMENTS.
8. AS-BUILT DRAWINGS SHALL BE PROVIDED BY THE CONTRACTOR TO THE ENGINEER OF RECORD, WHO SHALL PROVIDE RECORD DRAWINGS TO THE PROJECT ARCHITECT.
9. NO DEMOLITION SHALL BEGIN UNTIL PLANS INCLUDING THE DEMOLITION WORK HAVE BEEN APPROVED BY DSA.
10. CONTRACTOR SHALL RELOCATE AND/OR REPLACE LANDSCAPING, SPRINKLERS, SIDEWALKS, AND PAVEMENT AFFECTED BY THE CONSTRUCTION TO THE SATISFACTION OF THE SITE INSPECTOR.

GRADING

11. MAXIMUM CUT AND FILL SLOPE = 2:1.
12. NO FILL SHALL BE PLACED ON EXISTING GROUND UNTIL THE GROUND HAS BEEN CLEARED OF WEEDS, DEBRIS, TOPSOIL AND OTHER DELETERIOUS MATERIAL. FILLS SHOULD BE PLACED IN THIN LIFTS (8-INCH MAX OR AS RECOMMENDED IN SOILS REPORT), COMPACTED AND TESTED AS GRADING PROCESS UNTIL MASS GRADES ARE ATTAINED. ALL FILLS ON SLOPES STEEPER THAN 5 TO 1 (H/V) AND A HEIGHT GREATER THAN 5 FEET SHALL BE KEYED AND BENCHED INTO FIRM NATURAL SOIL FOR FULL SUPPORT. THE BENCH UNDER THE TOE MUST BE 10 FEET WIDE MIN.
13. NO ROCK OR SIMILAR IRREDUCIBLE MATERIAL WITH A MAXIMUM DIMENSION GREATER THAN 12 INCHES SHALL BE BURIED OR PLACED IN CLOSER THAN 10 FEET TO THE FINISHED GRADE.
14. THE WALLS AND FACES OF ALL EXCAVATIONS GREATER THAN FIVE (5) FEET IN DEPTH SHALL BE GUARDED BY SHORING, SLOPING OF THE GROUND OR OTHER APPROVED MEANS PURSUANT TO THE REQUIREMENTS OF THE DIVISION OF INDUSTRIAL SAFETY OF THE STATE OF CALIFORNIA. TRENCHES LESS THAN FIVE (5) FEET SHALL ALSO BE GUARDED WHEN THE POTENTIAL EXISTS FOR GROUND MOVEMENT.
15. COMPACTED FILL TO SUPPORT ANY STRUCTURES SHALL COMPLY WITH SECTION 31.22.00 PROJECTS WITHOUT PRELIMINARY SOILS REPORT SHALL HAVE DETAILED SPECIFICATIONS SATISFYING THE REQUIREMENTS IN SECTION 31.22.00 PREPARED BY THE EOR.
16. ADEQUATE CONSTRUCTION CONTROL STAKES SHALL BE SET BY THE SURVEYOR TO ENABLE THE CONTRACTOR TO CONSTRUCT THE WORK TO THE PLAN GRADES. THE CONTRACTOR SHALL BE RESPONSIBLE FOR THE PRESERVATION OF BENCHMARKS AND CONSTRUCTION CONTROL STAKING DURING CONSTRUCTION.
17. CARE SHOULD BE TAKEN TO PREVENT GRADES, DITCHES, AND SWALES FROM UNDERMINING EXISTING IMPROVEMENTS.

DRAINAGE AND EROSION/ DUST CONTROL

18. THE CONTRACTOR SHALL PROVIDE AND MAINTAIN AN EFFECTIVE MEANS OF DUST CONTROL, INCLUDING ADEQUATE WATERING, AT ALL TIMES.
19. ALL GRADING OPERATIONS SHALL BE DISCONTINUED WHEN SUSTAINED WIND VELOCITIES EXCEED 25 MILES PER HOUR.
20. THE CONTRACTOR SHALL NOT CAUSE ANY EXCAVATED MATERIAL, MUD, SILT OR DEBRIS TO BE DEPOSITED ONTO PUBLIC OR PRIVATE PROPERTY ADJACENT TO THE RIGHT OF WAY DURING CONSTRUCTION WITHOUT PRIOR WRITTEN APPROVAL.
21. NO OBSTRUCTION OF NATURAL WATER COURSES SHALL BE PERMITTED.
22. DRAINAGE ACROSS THE PROPERTY LINE SHALL NOT EXCEED THAT WHICH EXISTED PRIOR TO GRADING. EXCESS FOR CONCENTRATED DRAINAGE SHALL BE CONTAINED ON SITE OR DIRECTED TO AN APPROVED DRAINAGE FACILITY.
23. ALL EXISTING DRAINAGE COURSES ON THE PROJECT SITE MUST CONTINUE TO FUNCTION. PROTECTIVE MEASURES AND TEMPORARY DRAINAGE PROVISIONS MUST BE USED TO PROTECT ADJOINING PROPERTIES DURING GRADING OPERATIONS.
24. DURING ROUGH GRADING OPERATIONS AND PRIOR TO CONSTRUCTION OF PERMANENT DRAINAGE STRUCTURES, TEMPORARY DRAINAGE CONTROL (BEST MANAGEMENT PRACTICES, BMPS) SHALL BE PROVIDED TO PREVENT PONDING WATER AND DAMAGE TO ADJACENT PROPERTIES.
25. PROVIDE 5' WIDE BY 1' HIGH BERM ALONG THE TOP OF ALL FILL SLOPES STEEPER THAN 3:1.
26. THE GROUND IMMEDIATELY ADJACENT TO THE BUILDING FOUNDATION SHALL BE SLOPED AWAY WITH 2% MIN F OR A MIN DISTANCE OF 10 HORIZONTAL FEET. SWALES WITHIN 10 FEET FROM BUILDING SHALL HAVE 2% MINIMUM SLOPE.

HARDSCAPE

27. ALL EXPOSED CONCRETE SURFACES SHALL CONFORM IN GRADE, COLOR AND FINISH TO MATCH EXISTING CONCRETE, UNLESS OTHERWISE NOTED ON THE CIVIL, ARCHITECTURAL, OR LANDSCAPE ARCHITECT'S PLANS.
28. NO CONCRETE SHALL BE PLACED UNTIL THE FORMS AND REINFORCING STEEL HAVE BEEN PLACED, INSPECTED AND APPROVED.
29. PAVEMENT STRUCTURAL SECTIONS SHOWN ARE MINIMUM AND SUBJECT TO REVISION AND APPROVAL OF THE ENGINEER AS DETERMINED BY SOILS TESTS TAKEN AFTER COMPLETION OF ROUGH GRADING.
30. ACTUAL THICKNESS OF A.C. PAVEMENT AND/OR BASE COURSE MATERIAL FOR STRUCTURAL PAVEMENT SECTIONS SHALL BE RECOMMENDED BY A GEOTECHNICAL REPORT, OTHERWISE THE GEOTECHNICAL ENGINEER WILL CONFIRM THE ON-SITE PAVEMENT SECTIONS BASED ON FIELD MEASURED "R" SUB GRADE VALUES.
31. APPROVED SOIL STERILANT IS REQUIRED UNDER ALL NEW ASPHALT PAVEMENT PRIOR TO PLACEMENT.
32. ALL MANHOLES, CLEANOUT FRAMES, COVERS AND VALVE BOXES SHALL BE RAISED TO FINISHED GRADE BY THE PAVING CONTRACTOR UPON COMPLETION OF PAVING.
33. UPON COMPLETION OF CONSTRUCTION, CONTRACTOR SHALL RESTORE ALL SIGNING, STRIPING, BARRICADES, AND OTHER TRAFFIC CONTROL DEVICES TO THE SATISFACTION OF THE SITE INSPECTOR.

UTILITIES

34. THE EXISTENCE AND APPROXIMATE LOCATIONS OF ANY UNDERGROUND UTILITIES OR STRUCTURES SHOWN ON THESE PLANS WERE OBTAINED BY A SEARCH OF THE AVAILABLE RECORDS.
35. THE CIVIL ENGINEER ASSUMES NO LIABILITY AS TO THE EXACT LOCATION OF SAID LINES NOR FOR UTILITY OR IRRIGATION LINES WHOSE LOCATIONS ARE NOT SHOWN.
36. CONTRACTOR IS TO FIELD VERIFY THE LOCATION AND ELEVATION OF ALL UTILITY CONNECTIONS AND CROSSINGS BY EXPLORATORY POTHOLES PRIOR TO CONSTRUCTION SO THAT ANY NECESSARY ADJUSTMENT CAN BE MADE IN ALIGNMENT AND/OR GRADE OF THE PROPOSED IMPROVEMENT. IT SHALL BE THE RESPONSIBILITY OF THE CONTRACTOR TO ACCOUNT FOR SUCH IN SUBMISSION OF HIS/HER BID AND TO EXERCISE PROPER PRECAUTION TO AVOID DAMAGE THERETO.
37. THE CONTRACTOR SHALL BE RESPONSIBLE FOR NOTIFYING ALL UTILITY AND IRRIGATION COMPANIES PRIOR TO WORK OR EXCAVATION TO DETERMINE THE EXACT LOCATIONS OF ALL LINES AFFECTING THIS WORK, WHETHER OR NOT SHOWN HEREON, AND FOR ANY DAMAGE OR PROTECTION TO THESE LINES.
38. THE CONTRACTOR SHALL CONTACT UNDERGROUND SERVICE ALERT AT 811 TWO WORKING DAYS BEFORE EXCAVATION.
39. REFER TO ELECTRICAL PLANS FOR RELOCATION OF EXISTING PULL BOXES AND OTHER ELECTRICAL OR COMMUNICATION FACILITIES WITHIN THE AREA OF THE NEW BUILDING.
40. REFER TO IRRIGATION PLANS FOR RELOCATION, REMOVAL OR ABANDONMENT OF EXISTING IRRIGATION FACILITIES WITH THE AREA OF THE NEW BUILDING. COORDINATE WITH THE DISTRICT, LANDSCAPE ARCHITECT, AND ARCHITECT FOR ANY CONFLICTS WITH AND RELOCATION OF IRRIGATION LINES RESULTING FROM THE PROPOSED IMPROVEMENTS.
41. NO TRENCH BACKFILL SHALL TAKE PLACE WITHOUT PRIOR APPROVAL OF THE SITE INSPECTOR.
42. A GEOTECHNICAL ENGINEER SHALL CERTIFY ALL BACKFILL COMPACTION. FAILURE TO OBTAIN THE REQUIRED DENSITY SHALL REQUIRE RE-WORKING OF THAT PORTION OF THE WORK UNTIL THE SPECIFIED DENSITY IS OBTAINED
43. NO OPEN TRENCH SHALL BE ALLOWED AT THE END OF THE DAY WITHOUT PRIOR APPROVAL OF THE SITE INSPECTOR.
44. PRIOR TO CONSTRUCTION, THE CONTRACTOR SHALL EXPOSE EXISTING FACILITIES, AND VERIFY ELEVATION AND LOCATION OF CONNECTIONS. DSA APPROVAL OF CONNECTIONS TO EXISTING FACILITIES DOES NOT IMPLY CORRECTNESS OF ELEVATIONS OR LOCATIONS SHOWN ON THE PLANS.
45. ALL UNDERGROUND UTILITIES SHALL BE INSTALLED, TESTED AND APPROVED PRIOR TO PAVING OPERATIONS
46. IF EXISTING UTILITIES OR ANY OTHER FACILITIES CONFLICT WITH THE PROPOSED IMPROVEMENTS, THE CONTRACTOR SHALL NOTIFY THE ENGINEER AND ALL AFFECTED DISCIPLINES IMMEDIATELY.

ABBREVIATIONS

AC	ACRES / ASBESTOS-CEMENT
ADT	AVERAGE DAILY TRAFFIC
APN	ASSESSOR'S PARCEL NUMBER
ASTM	AMERICAN SOCIETY OF TESTING AND MATERIALS
BLDG	BUILDING
BMP	BEST MANAGEMENT PRACTICE
BOT	BOTTOM
C&G	CURB AND GUTTER
C.B.	CATCH BASIN
C.O.	CLEANOUT
CL	CENTERLINE
DG	DECOMPOSED GRANITE
DMA	DRAINAGE MANAGEMENT AREA
DWY	DRIVEWAY
EMRA	ENCROACHMENT MAINTENANCE AND REMOVAL AGREEMENT
ESMT	EASEMENT
EX/EXIST	EXISTING
FF	FINISH FLOOR
FG	FINISH GRADE
FL	FLOWLINE
FS	FINISH SURFACE / FIRE SERVICE
FT	FEET
HDPE	HIGH DENSITY POLY ETHYLENE
HMP	HYDROMODIFICATION MANAGEMENT PLAN
ID	IDENTIFICATION
IE	INVERT ELEVATION
NTS	NOT TO SCALE
NO.	NUMBER
PERF	PERFORATED
PIP	PROTECT IN PLACE
PL	PROPERTY LINE
PM	PARCEL MAP
PROP	PROPOSED
PVC	POLYVINYL CHLORIDE
PVT	PRIVATE
ROW	RIGHT-OF-WAY
RPDA	REDUCED PRESSURE DETECTOR ASSEMBLY
RT	RIGHT
S	SEWER
S/W	SIDEWALK
SD	STORM DRAIN
SF	SQUARE FEET
SHT	SHEET
ST	STREET
TB	THRUST BLOCK
TC	TOP OF CURB
TG	TOP OF GRATE
TW	TOP OF WALL
TYP	TYPICAL
W	WATER
W/	WITH

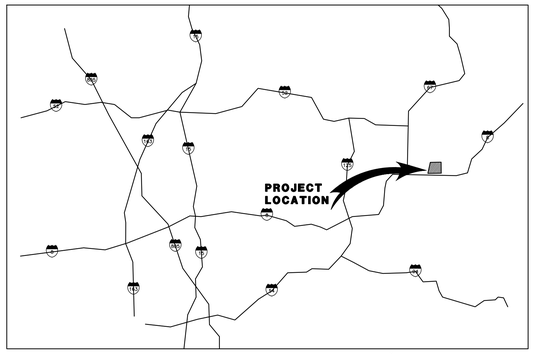

VICINITY MAP
NO SCALE

OWNER

CAJON VALLEY UNION SCHOOL DISTRICT
750 EAST MAIN STREET,
EL CAJON, CA 92020

ENGINEER

RICK
5620 FRIARS ROAD
SAN DIEGO, CA 92110

CONTACT: THOMAS ZANETTI
PHONE: 619-291-0707

ARCHITECT

RUHNAUCLARKE
3775 TENTH STREET
RIVERSIDE, CA 92501

CONTACT:
PHONE: 951-684-4664

SITE ADDRESS

1030 NARANCA AVE,
EL CAJON, CA 92021

GRADING QUANTITIES

GRADED AREA	0 ACRES
CUT QUANTITIES	0 CYD
FILL QUANTITIES	0 CYD
IMPORT	0 CYD

SHEET INDEX

TITLE SHEET	C-01
SITE PLAN	C-02
DETAIL SHEET	C-03

1
CCD

PRIVATE ENGINEER'S NOTICE TO CONTRACTOR

ALL CONTRACTORS AND SUBCONTRACTORS PERFORMING WORK SHOWN ON OR RELATED TO THESE PLANS SHALL CONDUCT THEIR OPERATIONS SO THAT ALL EMPLOYEES ARE PROVIDED A SAFE PLACE TO WORK AND THE PUBLIC IS PROTECTED. ALL CONTRACTORS AND SUBCONTRACTORS SHALL COMPLY WITH THE "OCCUPATIONAL SAFETY AND HEALTH REGULATIONS" OF THE U.S. DEPARTMENT OF LABOR AND THE STATE OF CALIFORNIA DEPARTMENT OF INDUSTRIAL RELATIONS "CONSTRUCTION SAFETY ORDERS." THE CIVIL ENGINEER SHALL NOT BE RESPONSIBLE IN ANY WAY FOR THE CONTRACTORS AND SUBCONTRACTORS COMPLIANCE WITH SAID REGULATIONS AND ORDERS. CONTRACTOR FURTHER AGREES THAT HE SHALL ASSUME SOLE AND COMPLETE RESPONSIBILITY FOR JOB-SITE CONDITIONS DURING THE COURSE OF CONSTRUCTION OF THIS PROJECT, INCLUDING SAFETY OF ALL PERSONS AND PROPERTY, THAT THIS REQUIREMENT SHALL APPLY CONTINUOUSLY AND NOT BE LIMITED TO NORMAL WORKING HOURS, AND THAT THE CONTRACTOR SHALL DEFEND, INDEMNIFY AND HOLD THE OWNER AND THE CIVIL ENGINEER HARMLESS FROM ANY AND ALL LIABILITY, REAL OR ALLEGED, IN CONNECTION WITH THE PERFORMANCE OF WORK ON THIS PROJECT, EXCEPTING FOR LIABILITY ARISING FROM THE SOLE NEGLIGENCE OF THE OWNER OR ENGINEER.

THE EXISTENCE AND APPROXIMATE LOCATIONS OF ANY UNDERGROUND UTILITIES OR STRUCTURES SHOWN ON THESE PLANS WERE OBTAINED BY A SEARCH OF THE AVAILABLE RECORDS. THE CIVIL ENGINEER ASSUMES NO LIABILITY AS TO THE EXACT LOCATION OF SAID LINES NOR FOR UTILITY OR IRRIGATION LINES WHOSE LOCATIONS ARE NOT SHOWN. THE CONTRACTOR SHALL BE RESPONSIBLE FOR NOTIFYING ALL UTILITY AND IRRIGATION COMPANIES PRIOR TO WORK OR EXCAVATION TO DETERMINE THE EXACT LOCATIONS OF ALL LINES AFFECTING THIS WORK, WHETHER OR NOT SHOWN HEREON, AND FOR ANY DAMAGE OR PROTECTION TO THESE LINES. CONTRACTOR IS TO FIELD VERIFY THE LOCATION AND ELEVATION OF ALL UTILITY CONNECTIONS AND CROSSINGS PRIOR TO CONSTRUCTION SO THAT ANY NECESSARY ADJUSTMENT CAN BE MADE IN ALIGNMENT AND/OR GRADE OF THE PROPOSED IMPROVEMENT.

CONTRACTOR IS RESPONSIBLE FOR SECURING COPIES OF THE STANDARD SPECIFICATIONS AND DESIGN GUIDELINES FROM THE AGENCIES OR MANUFACTURES REFERENCED IN THESE PLANS FOR CORRECT INSTALLATION OF THE PROPOSED INFRASTRUCTURE.

WORK TO BE DONE

THE IMPROVEMENTS CONSIST OF THE FOLLOWING WORK TO BE DONE. ACCORDING TO THESE PLANS PROJECT SPECIFICATIONS. AND THE SPECIFICATIONS AND STANDARD DRAWINGS OF THE CITY OF SAN DIEGO.

STANDARD SPECIFICATIONS:

DOCUMENT NO.	DESCRIPTION
PWPI010119-01	STANDARD SPECIFICATIONS FOR PUBLIC WORKS CONSTRUCTION (GREENBOOK), 2018 EDITION
PWPI010119-02	CITY OF SAN DIEGO STANDARD SPECIFICATIONS FOR PUBLIC WORKS CONSTRUCTION (WHITEBOOK), 2018 EDITION
PWPI010119-04	CITYWIDE COMPUTER AIDED DESIGN AND DRAFTING (CADD) STANDARDS, 2018 EDITION
PWPI060121-10	CALIFORNIA MANUAL OF UNIFORM TRAFFIC CONTROL DEVICES REVISION 6(CA MUTCD REV6), 2014 EDITION
PWPI030119-05	CALIFORNIA DEPARTMENT OF TRANSPORTATION U.S CUSTOMARY STANDARD SPECIFICATIONS, 2018 EDITION

STANDARD DRAWINGS:

DOCUMENT NO.	DESCRIPTION
PWPI010119-03	CITY OF SAN DIEGO STANDARD DRAWINGS FOR PUBLIC WORKS CONSTRUCTION, 2018 EDITION
PWPI030119-06	CALIFORNIA DEPARTMENT OF TRANSPORTATION U.S CUSTOMARY STANDARD PLANS, 2018 EDITION
	CITY OF CHULA VISTA DESIGN AND CONSTRUCTION STANDARD DRAWINGS 2017 EDITION

LEGEND

EXISTING	SYMBOL
EX. RIGHT OF WAY/PROPERTY LINE	
EX. LOT LINE	
EX. CURB AND GUTTER	
EX. WATER MAIN	W
EX. SEWER MAIN	S
EX. STORM DRAIN	SD
EX. STORM DRAIN CLEANOUT/INLET	SD
EASEMENT	
EX. TRANSIT STOP	
EX. STREET SURVEY MONUMENT	
EX. LEAD AND DISK	
EX. 2" IRON PIPE	
EX. SURVEY MONUMENTS	
EX. STREET LIGHT	
EX. UTILITY CLEAN OUT	CO CO
EX. CATCH BASIN	CB CB
EX. BACKFLOW PREVENTER	BP
EX. UTILITY VALVES	GV AV SV
EX. FIRE HYDRANT	
EX. UTILITY METERS	GM WM
EX. UTILITY VAULT	EV CV TV
EX. TRANSFORMER	TX
EX. UTILITY RISER	CR TR
EX. UTILITY PULL BOX	PB TPB E
EX. SIGN	
EX. BOLLARD	
EX. HANDICAP SYMBOL	
PROPOSED	
ASPHALT	
CONCRETE	
GRIND & OVERLAY	
WATER SERVICE	W
SEWER SERVICE	S

STAMPS

REGISTERED ENGINEER THOMAS ZANETTI No. C 72631 CIVIL STATE OF CALIFORNIA

CONSULTANT BRANDING

RICK
5620 FRIARS ROAD
SAN DIEGO, CA 92110
619-291-0707
rickengineering.com
SAN DIEGO · ORANGE · RIVERSIDE · SACRAMENTO
SAN LUIS OBISPO · SANTA CLARITA · PHOENIX
TUCSON · LAS VEGAS · DENVER

PROJECT No. : 1-16-21
9/4/2026
J-20586

DRAWN BY:RJCK CHECKED BY:RCA
DELTA # _____ DATE _____ ☐ ADD ☐ AFO ☐ CCD ☐ REV
DELTA # _____ DATE _____ ☐ ADD ☐ AFO ☐ CCD ☐ REV
DELTA # _____ DATE _____ ☐ ADD ☐ AFO ☐ CCD ☐ REV
DELTA # _____ DATE _____ ☐ ADD ☐ AFO ☐ CCD ☐ REV

Date: 9/4/2026 File to Open: \\cor-rickeng.com\projects\C20500\20586_NaranncaES_PortableS&RR\Civil\PlanSets\20586-C-TITLE-01.dwg

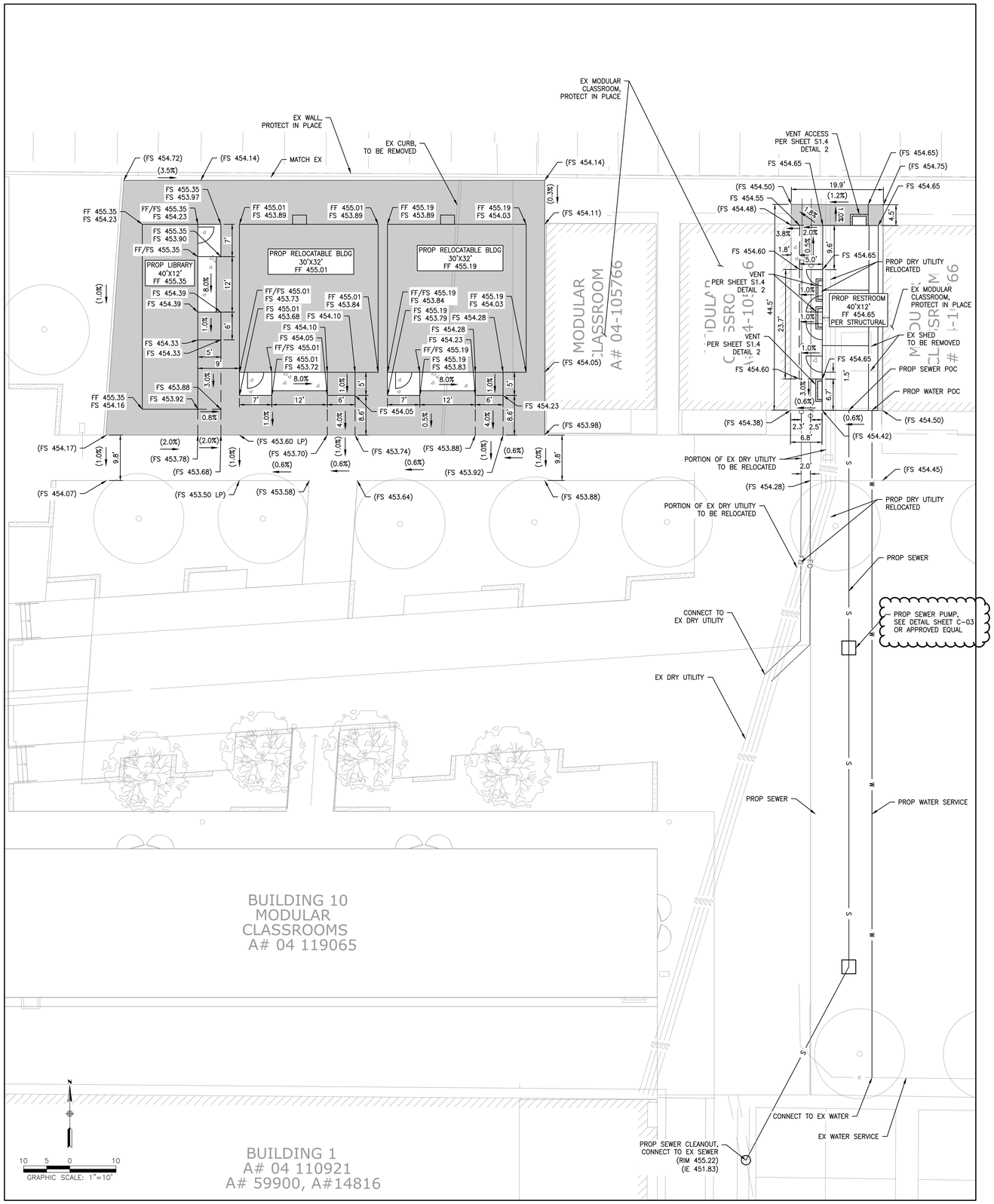

LEGEND:

—W—	PROP WTR
—S—	PROP SWR
	PROP CONCRETE
	PROP ASPHALT
	PROP GRIND AND OVERLAY

NOTES:

1. UTILITY LOCATION AND INVERTS TO BE VERIFIED IN FIELD

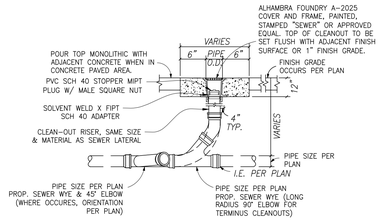

SEWER CLEANOUT

NTS

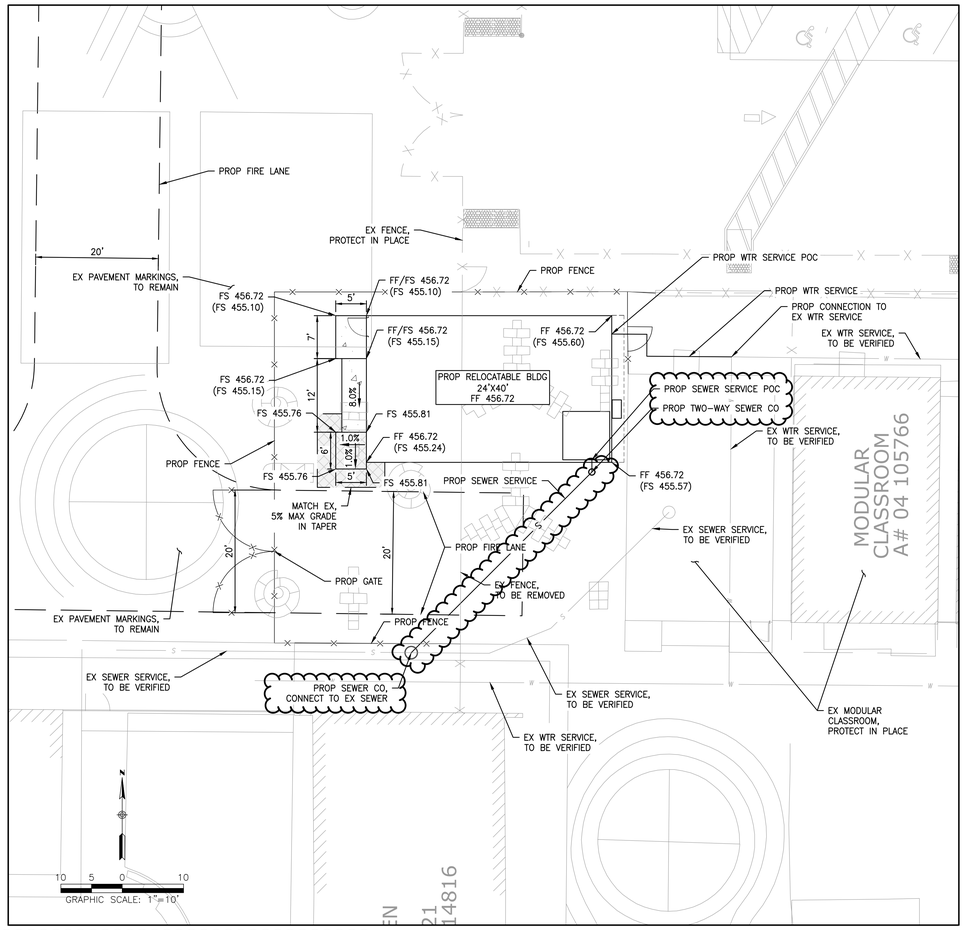

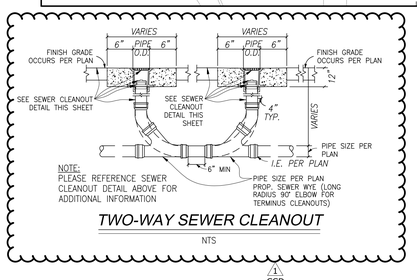

TWO-WAY SEWER CLEANOUT

NTS

1
CCD

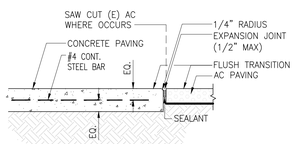

CONC. EDGE @ PAVING

NTS

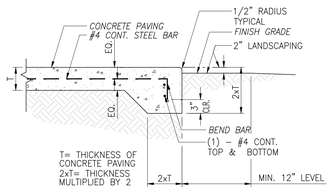

CONC. EDGE @ PLANTING

NTS

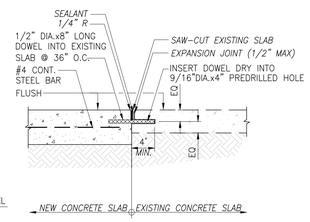

EXISTING CONC. JOIN

NTS

STAMPS

CONSULTANT BRANDING

RICK
5620 FRIARS ROAD
SAN DIEGO, CA 92110
619-291-0707
rickengineering.com
SAN DIEGO ORANGE RIVERSIDE SACRAMENTO SAN LUIS OBISPO SANTA CLARITA PHOENIX TUCSON LAS VEGAS DENVER

PROJECT No. : 1-16-21
9/9/2026
J-20586

DRAWN BY:RICK CHECKED BY:RCA
DELTA # ____ DATE ____ ☐ADD ☐AFO ☐CCD ☐REV
DELTA # ____ DATE ____ ☐ADD ☐AFO ☐CCD ☐REV
DELTA # ____ DATE ____ ☐ADD ☐AFO ☐CCD ☐REV
DELTA # ____ DATE ____ ☐ADD ☐AFO ☐CCD ☐REV

RUHNAUCLARKE.COM

3775 TENTH STREET, RIVERSIDE CALIFORNIA 92501 (951) 684 4664 / 5751 PALMER WAY, SUITE C, CARLSBAD CALIFORNIA 92010 (760) 438 5899 / 801 16TH STREET, SACRAMENTO, CA 95814 (916) 379-8111

NARANCA ELEMENTARY SCHOOL
RELOCATABLE CLASSROOM BUILDINGS
NARANCA ELEMENTARY SCHOOL
1030 NARANCA AVE, EL CAJON, CA 92021
CAJON VALLEY UNION SCHOOL DISTRICT

SITE PLAN

C-02

J-20538

Date: 9/9/2026 Time: 9:00 AM Plotted by: jonathan.gomez \\cp.rickeng.com\projects\C20500\20586_NaranceES_PortableBRR\Civil\PlanSets\20586-C-GRD-02.dwg

STAMPS

CONSULTANT BRANDING

REGISTERED ENGINEER THOMAS ZANETTI No. C 72631 CIVIL STATE OF CALIFORNIA

RICK
5620 FRIARS ROAD
SAN DIEGO, CA 92110
619-291-0707
rickengineering.com
SAN DIEGO · ORANGE · RIVERSIDE · SACRAMENTO · SAN LUIS OBISPO · SANTA CLARITA · PHOENIX · TUCSON · LAS VEGAS · DENVER

Sierra Peak Pump Systems

SP84D

The model SP84D is a complete packaged grinder pump system. Building on proven low pressure sewer technology, the system features two progressive-cavity grinder pumps with slicer-style impellers to achieve enhanced performance and improved operational capacity. Lead/lag pump will alternate every cycle and during high flow events, both pumps will engage to provide increased capacity. Applications for model SP84D include high-end residential, multi-family, and commercial installations.

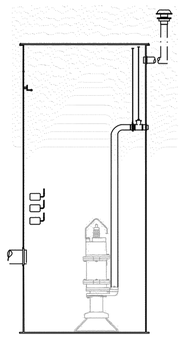

Standard Package Includes:

Progressive Cavity Grinder Pumps

- Discharge Hoses with Quick Disconnect Face
- Stainless Steel Lifting Hooks
- Lifting Ropes
- Electrical Quick Disconnects

Fiberglass Duplex Basin

- Fiberglass Lid and Hardware
- 1-1/4" Quick Disconnect Discharge Receiver
- Gate Valves
- Cord Grip/Bulkhead Fittings
- Level Control Mounting Bracket

Supply Cables with Electrical Quick Disconnect

4" SCH40 Inlet Grommet

Mechanical Floats for Level Control

NEMA 4X Alarm / Control Panel

2" Mushroom Vent Kit with Activated Carbon Filter

Available Options:

Inlet Grommets for 4" or 6" / SCH40 or SDR35

Remote Monitoring System (Receive alarms via text/email)

Lateral Kit with Ball and Check Valve and Compression Fittings

Custom Basin Dimensions

Generator Receptacle with Auto Transfer Switch in Panel

2 HP Centrifugal Pump

1

Sierra Peak Pump Systems

Operational Information

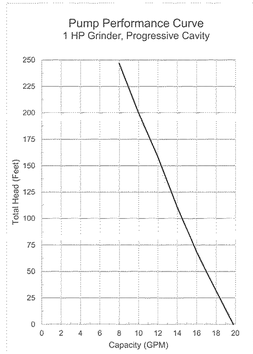

HP/Power Supply	1 HP / 1 Φ, 60 Hz
Full Load Amps	8 amps (240V)
Poles/Rated Speed	1800 RPM
Insulation Class	F Class
Start	Internal Start Capacitors
Cooling	Oil-Filled
Mechanical Seal	Silicon Carbide

Discharge Connection	1-1/4" NPT
Basin Material	Fiberglass
Basin Lid	Fiberglass
Basin Dimensions	84" H x 36" D
Basin Capacity	370 gallons
Invert Depth Range	Up to 48" below grade

Pump Features

Double Barrier Moisture Protection at Cord Entry

Built-In Start Switch

High-Tensile Iron Pump Construction

Check Valve with Pressure Relief (Not Pictured)

Abrasive Resistant Shaft Seal

Stainless Steel Rotor

Proprietary Stator with Extended Lifetime

Stainless Steel Hardened Slicer Assembly (Heat Treated and Precision Ground)

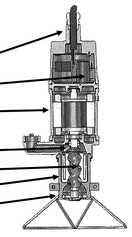

2

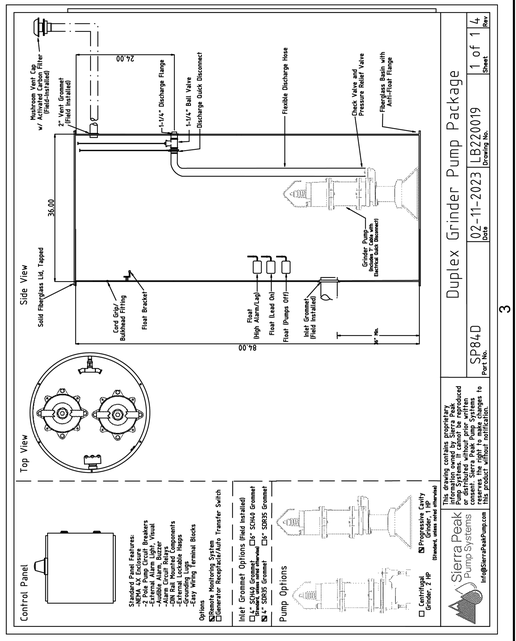

Signa MECHANICAL "BUILDING SOLUTIONS FOR TODAY'S ENVIRONMENT"

Lateral Kit

The lateral kit includes the necessary components to install the required lateral valve on the discharge line between the grinder pump station and the discharge connection (to gravity or shared force main). The kit is designed for use with either HDPE SDR11 or SCH40 PVC pipe. The lateral valve assembly consists of a combination stainless steel ball valve curb stop and stainless steel flapper-type check valve, for back flow prevention and the ability to isolate each grinder pump station. Some manufacturers may require the installation of the lateral kit as an integral component of their grinder pump system.

Standard Kit Includes:

- 1-1/4" Stainless Steel Combination Ball Valve Curb Stop and Check Valve Assembly, rated to 235 psi
- 1-1/4" HDPE Compression Fittings, rated up to 150 psi (Qty 2) (factory-installed for easy installation)
- 1-1/4" Stainless Steel Gripper Rings, for use only with SCH40 PVC (Qty 2)
- Arch-Style ABS Curb Box, extendable from 18"-30"
- Cast Iron Curb Box Lid, stamped "Sewer", traffic rated in accordance with AASHTO H20 M306-10
- Stainless Steel, Painted Curb Box Rod, keyed to valve with included Cotter Pin

Available Options:

Curb Boxes available in variable lengths:

- 30"-42"
- 36"-54"
- 42"-66"
- 48"-78"
- 60"-102"

Valve assembly available in 1-1/4", 1-1/2", or 2"

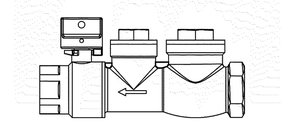

4

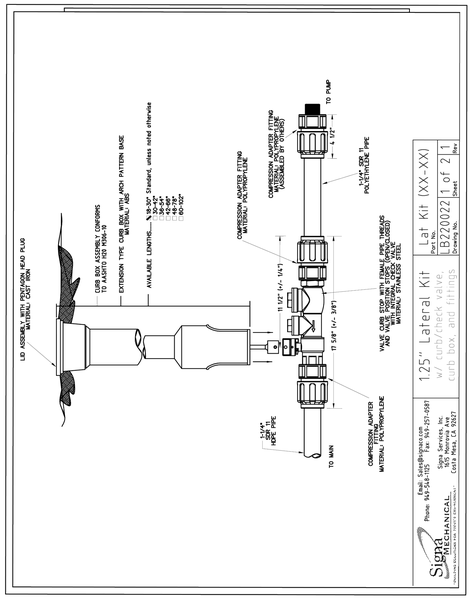

5

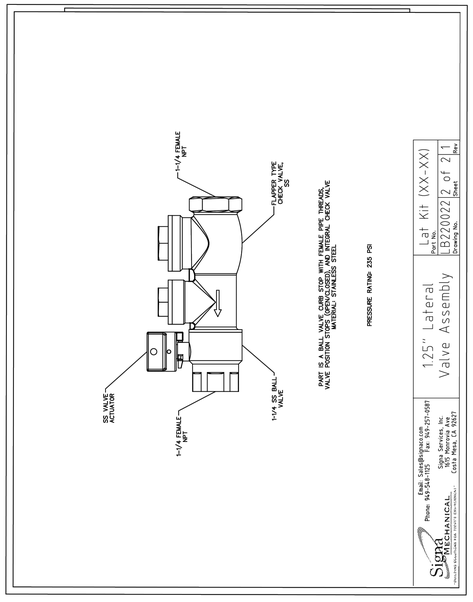

6

Sierra Peak Pump Systems

Duplex Panel

Sierra Peak Pump Systems panels are manufactured in-house and designed specifically for use with the SPPS duplex pump stations. Please consult factory to confirm compatibility before using with non-SPPS equipment. Panels are rated for both indoor and outdoor installation.

Standard Panel Features

- Audible alarm with silence switch
- Visual external alarm light
- Corrosion resistant NEMA 4X enclosure
- Manual push-to-run button
- Di-pole pump circuit breakers
- Alarm circuit relays
- DIN rail mounted components
- Internal run, lead/lag, and alarm indicator lights
- External lockable hasps
- Grounding lugs
- Easy wiring terminal blocks
- UL508A capable

Available Options:

- Remote Monitoring System
- Generator Receptacle with Auto Transfer Switch
- Main Service Disconnect Breaker
- GFCI Receptacle
- Time Delay Relays
- Hour Meters
- Stainless Steel or Poly Enclosures

*Additional customizations available - consult factory

SAM

SAM (Remote Monitoring System)

Standard panels are SAM-capable and most new SPPS system packages include one year of remote monitoring communication. Users are able to receive notifications for power loss and alarm conditions, view pump data logs online, and manage profile settings through the SAM website.

- Designate unlimited number of contacts
- Choose between email or text notifications
- Activated at startup (for new systems)
- Activated upon request (for existing systems)

Voltage	240V / 1 Φ
Full Load Amps	20 amps (w/Pumps)
Interior Dimension	12" (w) x 14" (h) x 6" (d)
Exterior Dimension	13.44" x 14.625" x 7.44"
Enclosure Type	NEMA 4X
Enclosure Material	Molded FRP

7

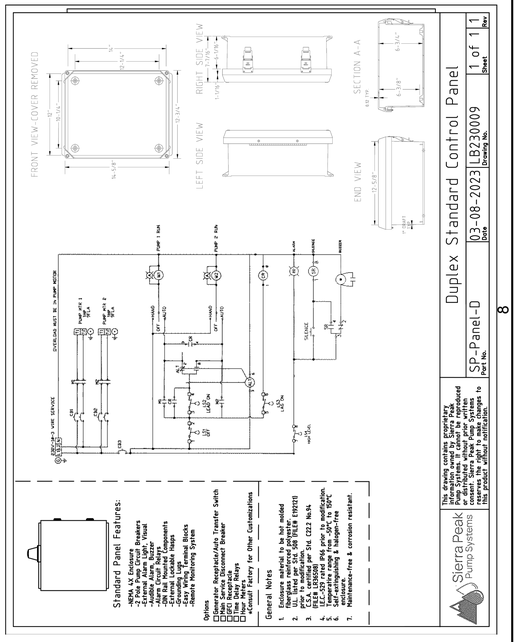

8

Trace: RUNAUCLARK Drawn by: jonmoore Date: 9/4/2026 Time: 10:00:00 AM
\\ca-rickeng.com\projects\C20500\20586_NaranciaES_Portable&BR\Civil\PlanSet\J-20586--C-03--03.dwg

PROJECT No. : 1-16-21
9/4/2026
J-20586

DRAWN BY:RICK CHECKED BY:RCA

DELTA # ____	DATE ____	☐ ADD	☐ AFO	☐ CCD	☐ REV
DELTA # ____	DATE ____	☐ ADD	☐ AFO	☐ CCD	☐ REV
DELTA # ____	DATE ____	☐ ADD	☐ AFO	☐ CCD	☐ REV
DELTA # ____	DATE ____	☐ ADD	☐ AFO	☐ CCD	☐ REV

RUHNAUCLARK.COM

3775 TENTH STREET, RIVERSIDE CALIFORNIA 92501 (951) 684 4664 / 5751 PALMER WAY, SUITE C, CARLSBAD CALIFORNIA 92010 (760) 438 5899 / 801 16TH STREET, SACRAMENTO, CA 95814 (916) 379-8111

NARANCA ELEMENTARY SCHOOL
RELOCATABLE CLASSROOM BUILDINGS

NARANCA ELEMENTARY SCHOOL
1030 NARANCA AVE, EL CAJON, CA 92021
CAJON VALLEY UNION SCHOOL DISTRICT

DETAIL SHEET

C-03

J-20538

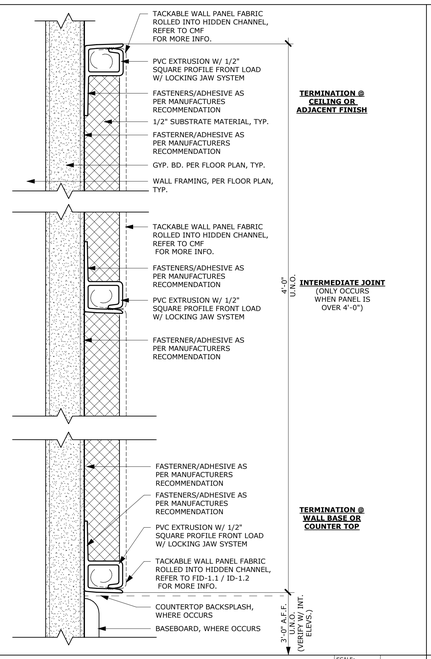

TACKABLE WALL PANEL

SCALE: 12" = 1'-0" | 11

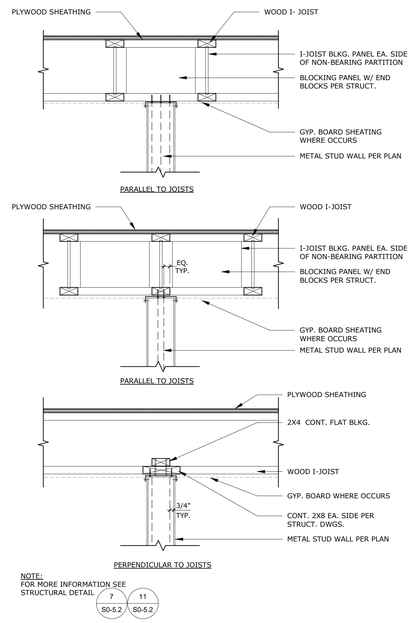

STUD WALL TO STRUCTURE

SCALE: 1" = 1'-0" | 8

NOTE:
SIGNAGE SHALL BE PROVIDED BY CONTRACTOR OR DISTRICT FOR CERTIFICATION. REFER TO PC (A# 04-124199) MODULAR BUILDING FLOOR PLANS ON SHEETS, A1.0, AND A1.2.

NEW A.L.S. CALCULATOINS

BUILDING	ROOM NAME	ROOM #	# OF OCC	# OF RECEIVERS REQUIRED = (# OF SEATS)(4%)	# OF HEARING-AID COMATIBLE RECIEVERS = (# OF RECEIEVERES)(25%)	TOTAL # OF RECEIVERS PROVIDED
BLDG `30'	CLASSROOM	30	10	(10 OCC)X(0.04%) = 0.4, 2 PROVIDED	(1 RECEIVERS)(0.25) = .25 0.5, 2 PROVIDED	2 H.A.C. REC.
				TOTAL # OF RECEIVERS PROVIDED 2	2 MINIMUN HEARING AID COMPATIBLE RECEIEVER	

NOTES:
1. PER CBC SECTION 11B-219.3, THE MIN. # OF RECEIVERS TO BE PROVIDED SHALL BE EQUAL TO 4% OF TOTAL # OF OCCUPANTS, BUT IN NO CASE LESS THAN TWO. 25% MIN. OF RECEIVERS PROVIDED, BUT NO FEWER THAN TWO, SHALL BE HEARING-AID COMPATIBLE

NEW A.L.S. CALCS 12 X 40

SCALE: 1/4" = 1'-0" | 3

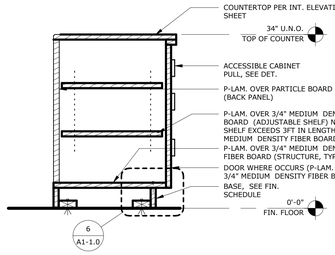

BASE CABINET

SCALE: 1" = 1'-0" | 4

NOTE:
1. FOR MORE INFORMATION ON FLOOR PLAN, INTERIOR & EXTERIOR ELEVATIONS, SEE PC SHEET **A1.0, A4.0** AND **A5.0** RESPECTIVELY AS PART OF THE PC DRAWINGS.
2. RAMP PER DETAIL **16/A1.0**
3. WOOD FOUNDATION PER PC DRAWINGS

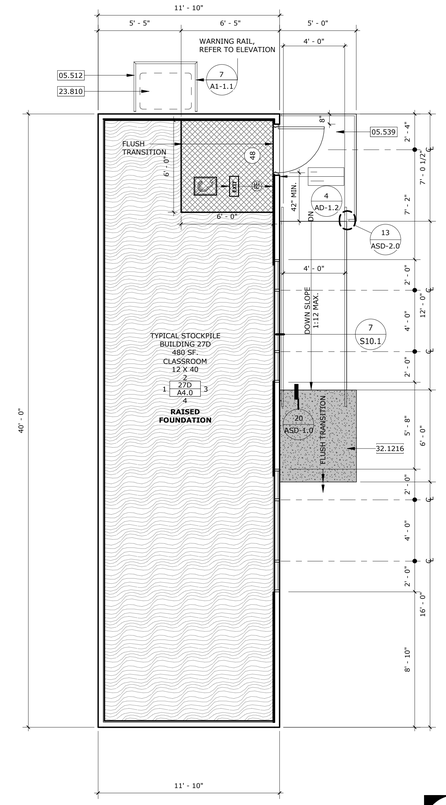

NOTE:
1. FOR MORE INFO., SEE PC DRAWINGS SHEET A1.0 WITH A# 02-124199
2. ALL DOORS OR SPACES THAT HAVE AN OCCUPANT LOAD OF 5 OR MORE SHALL BE EQUIPPED WITH HARDWARE THAT IS LOCKABLE FROM THE INSIDE PER CBC SECTION 1010.2.2

12 X 40 FLOOR PLAN - BLDG 27D

SCALE: 1/4" = 1'-0" | 1

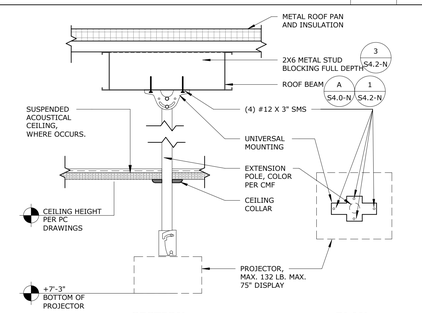

CEILING PROJECTOR MOUNT

SCALE: 1" = 1'-0" | 9

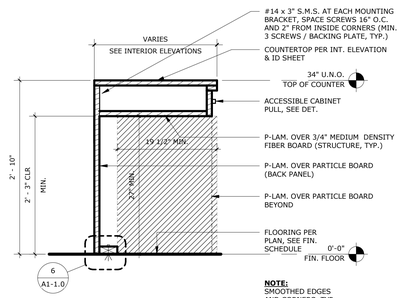

NOTE:
SMOOTHED EDGES AND CORNERS, TYP.

ACCESSIBLE BASE CABINET

SCALE: 1" = 1'-0" | 5

NOTE:
1. FOR MORE INFORMATION ON FLOOR PLAN, INTERIOR & EXTERIOR ELEVATIONS, SEE PC SHEET **A1.2, A4.1** AND **A5.0A** RESPECTIVELY AS PART OF THE PC DRAWINGS.
2. CONCRETE FOUNDATION PER PC DRAWINGS

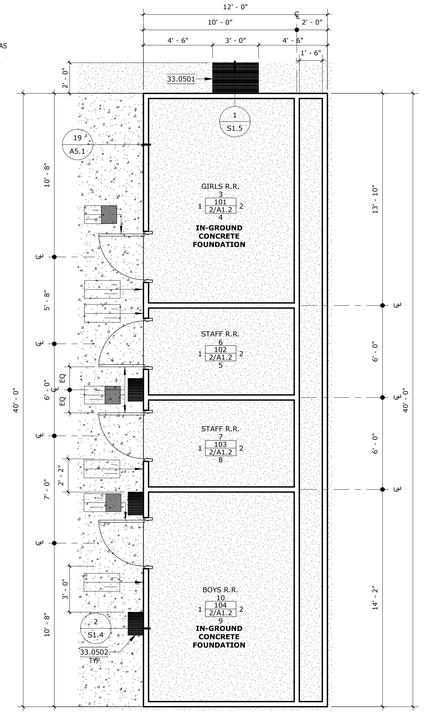

RESTROOM FLOOR PLAN-BLDG RR

SCALE: 1/4" = 1'-0" | 2

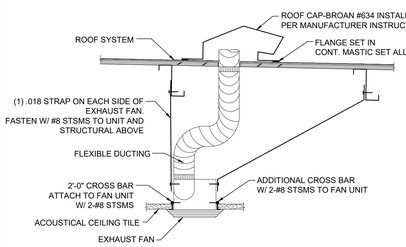

EXHAUST FAN INSTALLATION

SCALE: 3" = 1'-0" | 13

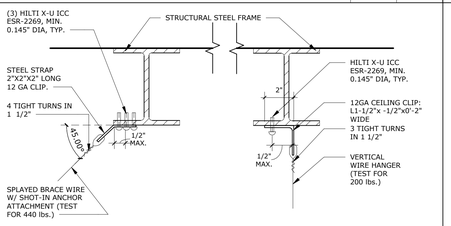

NOTES :
1. BEAM FLANGE THICKNESS SHALL NOT BE LESS THAN 3/16".
2. ARCHITECT, IOR AND CONTRACTOR SHALL VERIFY THAT NO PAF IS INSTALLED IN THE PROTECTED ZONE OF ANY STEEL MEMBER. SEE AISC 341.
3. REFER TO DETAIL FOR ADDITIONAL INFORMATION.

WIRE CONN. @ STRUCT'L STEEL

SCALE: 3" = 1'-0" | 10

2304.10.5.1 FASTNERS AND CONNECTORS FOR PRESERVATIVE TREATED WOOD. FASTNERS INCLUDING NUTS AND WASHERS, IN CONTACT WITH PRESERVATIVE TREATED WOOD SHALL BE OF HOT-DIPPED ZINK-COATED GALVANIZED STEEL, STAINLESS STEEL, SILICON BRONZE OR COPPER. STABLES, TIMBER RIVETS, WOOD SCREWS AND LAG SCREWS SHALL BE PERMITTED TO BE OF MECANICALLY DEPOSETED ZINC-COATED STEEL WITH COATING WEIGHTS IN ACCORDANCE WITH ASTM B695, CLASS 55 MIN. CONNECTORS THAT ARE USED IN EXTERIOR APPLICATIONS AND IN CONTACT WITH PREERVATIVE TREATED WOOD SHALL HAVE COATING TYPES AND WEIGHTS IN ACCORDANCE WITH THE TREATED WOODOR CONNECTORS MANUFACTURER'S RECOMMENDATIONS. IN THE ABSENCE OF MANUFACTURER'S RECOMMENDATIONS NOT LESS THAN ASTM A653, TYPE G185ZINK- COATED GALVANIZED STEEL, OR EQUIVELANT SHALL BE USED.
EXCEPTION: PLAIN CARBON STEEL FASTENERS, INCLUDING NUTS AND WASHERS, IN SBX/DOT AND ZINC BORATE PRESERVATIVE TREATED WOOD IN AN INTERIOR, DRY ENVIROMENT SHALL BE PERMITTED.

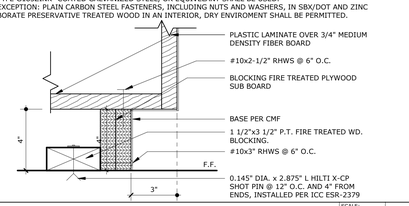

BASE CABINET ANCHORAGE

SCALE: 3" = 1'-0" | 6

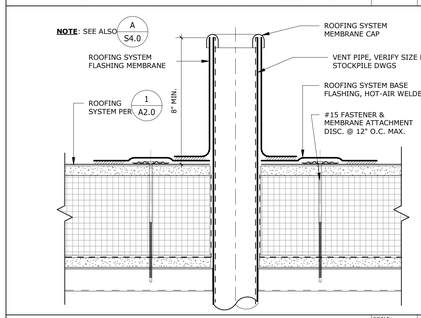

ROOF VENT

SCALE: 3" = 1'-0" | 14

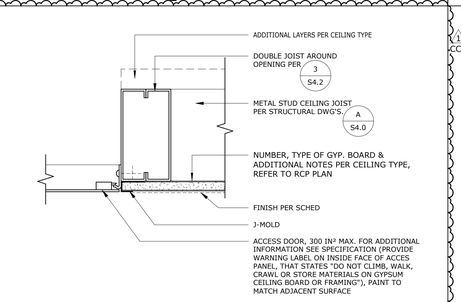

TYP. ACCESS CEILING HATCH

SCALE: 3" = 1'-0" | 12

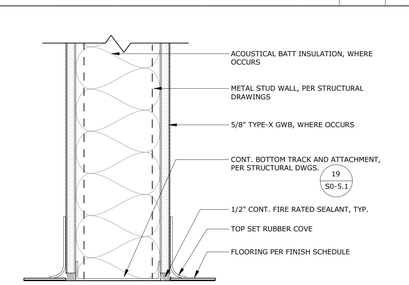

TYP. INT. WALL BASE

SCALE: 3" = 1'-0" | 7

AGENCY APPROVAL
File No: ######A#/04-125522

STAMPS

RUHNAU CLARKE ARCHITECTS

CONSULTANT BRANDING

GENERAL NOTES

1. VERIFY ALL DIMENSIONS PRIOR TO CONSTRUCTION.
2. ALL DIMENSIONS ARE TO FACE OF STUD, CENTERLINE OF COLUMN OR EDGE OF SLAB, U.N.O.
3. SIGNAGE AND ELEMENTS IDENTIFIED AS "BY OTHERS" OR "BY OWNER" TO BE PROVIDED PER A# 02-124199
4. DEMO EXISTING TACK SURFACE PANELS AND ACT IN ITS ENTIRETY TO EXPOSED STUDS AND STRUCTURE PER RESTROOM PLAN. PREPARE FOR NEW INSTALLATION, PREP AREA TO RECEIVE NEW WORK, PATCH AND REPAIR TEXTURE/PAINT TO MATCH EXISTING

KEYNOTES

05.512 42" HIGH GALV. STL PIPE GUARDRAIL
05.539 ACCESSIBLE METAL RAMP, SEE DETAIL 22/ASD-1.0 AND MODULAR BUILDING PLANS FOR MORE INFO
23.810 EXISTING BARD HVAC EQUIPMENT TO REMAIN
32.1216 ASPHALT PAVING PER CIVIL DRAWINGS
33.0501 FOUNDATION ACCESS/VENT WELL PER 1/S1.5-LOCATION MAY VARY
33.0502 4'-0"x18" MAX. VENT SPACE

FINISH NOTES

1. ALL FINISHES SHALL COMPLY WITH CBC CHAPTERS 3, 8, & 10, CFC AND CCR TITLE 19 AND STATE OF CALIFORNIA TECHNICAL BULLETIN 117-2013.
2. WALL AND CEILING MATERIALS SHALL NOT EXCEED THE FLAME SPREAD CLASSIFICATIONS IN CBC TABLE 803.13.
3. ALL ADJACENT DISSIMILAR FINISH MATERIALS TO RECEIVE BEAD OF CAULK, U.N.O.
4. ALL EXPOSED STEEL, HOLLOW METAL DOORS AND FRAMES, AND LOUVERS TO BE PAINTED.
5. AT COVE BASE, PROVIDE CONTINUOUS 3/8" RADIUS
6. ALL FLOOR FINISHES SHALL BE STABLE, FIRM, & SLIP RESISTANT PER CBC SECTION 11B-302.1.
7. CARPET / CARPET TILE FLOORING SHALL BE SECURELY ATTACHED WITH FIRM BACKING AND PILE HEIGHT OF 1/2" MAX. PER CBC SECTION 11B-302.2. CARPET EDGES SHALL COMPLY WITH CBC SECTION 11B-303.
8. ALL FLOOR FINISHES SHALL EXTEND BELOW ACCESSIBLE WORK SURFACES, SINKS, ETC. FOR THE REQUIRED TOE/KNEE CLEARANCE.
9. REFER TO CORRESPONDING SPECIFICATIONS FOR BURNING CHARACTERISTICS AND TESTING REQ.
10. FOR FINISHED SCHEDULE, SEE **S/A1-1.1**

FINISH ABBREVIATIONS

ACP	ACOUSTICAL CEILING PANEL (SUSPENDED)	RB	RUBBER BASE
ACT	ACOUSTICAL CEILING TILE	RES	RESINOUS/EPOXY FLOORING
AWP	ACOUSTIC WALL PANEL	RF	RUBBER FLOORING
		RS	ROLLER SHADE SYSTEM
CONC	CONCRETE		
CPL	CEMENT PLASTER	S	SEAL
CPT	CARPET	SEAL	SEALED
		SSM	SOLID SURFACE MATERIAL
EPOXY	EPOXY FLOOR	SV	SHEET VINYL
EPT	EPOXY TERRAZZO		
EXP	EXPOSED	T	TILE
		TWP	TACKABLE WALL PANEL
FF	FACTORY FINISH		
		U.O.S.	UNDERSIDE OF STRUCTURE
GPL	GYPSUM PLASTER		
GWB	GYPSUM WALLBOARD	VCT	VINYL COMPOSITION TILE
GWWB	WATER RESISTANT GWB	VF	VINYL FABRIC
LVT	LUXURY VINYL TILE	WD	WOOD
OP	OPERABLE PARTITION		
PES	PAINT - EGGSHELL		
PL	PLASTIC LAMINATE		
PF	PAINT, FLAT		
PSG	PAINT, SEMI-GLOSS		

FLOOR FINISH LEGEND

PANEL
PT-1
FRP-1

CARPETING
CPT-1
CPT-2

XX OCCUPANCY
ASSISTIVE LISTENING SIGNAGE 15 AD-1.2
EXIT RAMP DOWN SIGN 7 AD-1.2
FE FIRE EXTINGUISHER 10 AD-1.2
ROOM NAME AND NUMBER 4 AD-1.2
ACCESSIBLE RESTROOM SIGNAGE 22 AD-1.2

NOTE:
REFER TO COLORS, MATERIALS AND FINISHES LEGEND FOR ADDITIONAL INFORMATION

NARANCA ES RELOCATABLE CLASSROOM BUILDINGS:

PROJECT No. :1-16-21
9/11/2026 2:55:19 PM

DRAWN BY:
DELTA # 1 DATE Date 1
DELTA # ____ DATE ____
DELTA # ____ DATE ____
DELTA # ____ DATE ____

CHECKED BY:
ADD AFO CCD REV
ADD AFO CCD REV
ADD AFO CCD REV
ADD AFO CCD REV

RUHNAUCLARKE.COM
3775 TENTH STREET, RIVERSIDE CALIFORNIA 92501 (951) 684 4664 / 5751 PALMER WAY, SUITE C, CARLSBAD CALIFORNIA 92010 (760) 438 5899

NARANCA ES RELOCATABLE CLASSROOM BUILDINGS
1030 NARANCA AVE, EL CAJON, CA 92021
CAJON VALLEY UNION SCHOOL DISTRICT

12" X 40" RELO FLOOR PLAN

A1-1.0

1-16-21

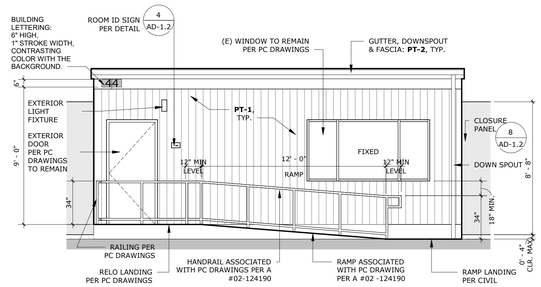

RELO EAST ELEVATION | SCALE: 1/4" = 1'-0" | 6

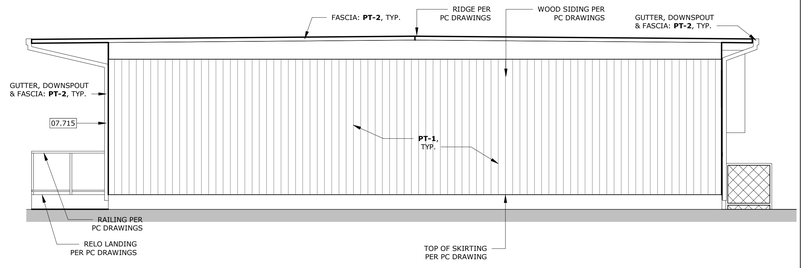

RELO NORTH ELEVATION | SCALE: 1/4" = 1'-0" | 2

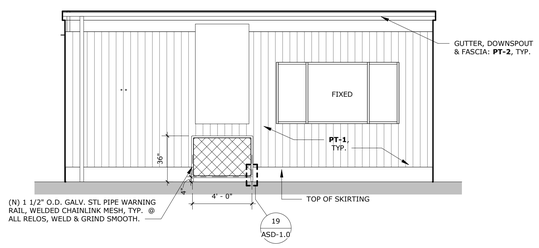

RELO WEST ELEVATION | SCALE: 1/4" = 1'-0" | 7

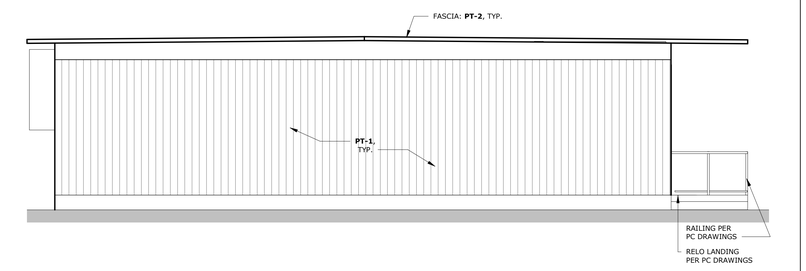

RELO SOUTH ELEVATION | SCALE: 1/4" = 1'-0" | 3

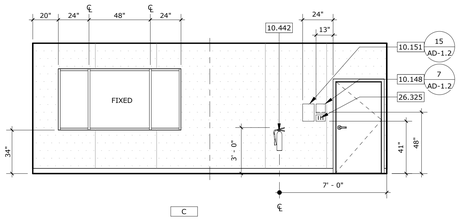

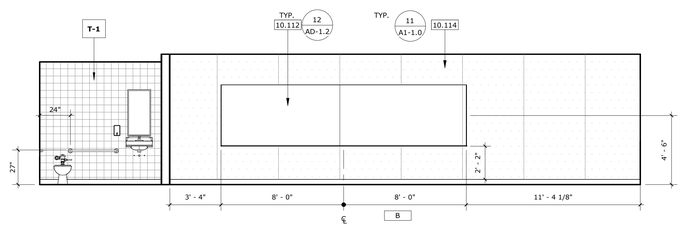

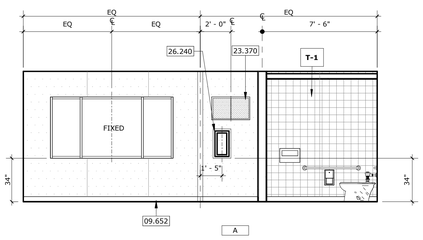

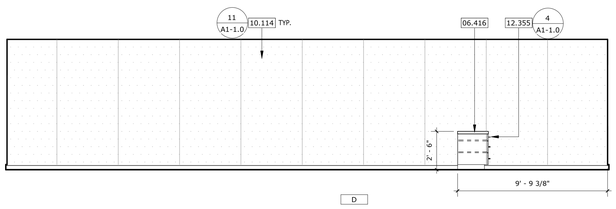

20 X 40 RELO INTERIOR ELEVATIONS | SCALE: 1/4" = 1'-0" | 4

ROOM NO.	ROOM NAME	FLOOR MATERIAL	FLOOR COLOR	BASE MATERIAL	BASE COLOR	WALLS ELEVATION 1 MATERIAL	ELEVATION 1 FINISH	ELEVATION 1 COLOR	ELEVATION 2 MATERIAL	ELEVATION 2 FINISH	ELEVATION 2 COLOR	ELEVATION 3 MATERIAL	ELEVATION 3 FINISH	ELEVATION 3 COLOR	ELEVATION 4 MATERIAL	ELEVATION 4 FINISH	ELEVATION 4 COLOR	CEILING MATERIAL	CEILING FINISH	CEILING COLOR	REMARKS	ROOM NO.
27B/27C	CLASSROOM 30 X 32	CPT	CPT-1/ CPT-2	RB	RB-1	TWP	FF	TWP-1	TWP	FF	TWP-1	TWP	FF	TWP-1	TWP	FF	TWP-1	(E) ACT	FF	EXIST		27B/27C
27D	CLASSROOM 12 X 40	CPT	CPT-1/ CPT-2	RB	RB-1	TWP	FF	TWP-1	TWP	FF	TWP-1	TWP	FF	TWP-1	TWP	FF	TWP-1	(E) ACT	FF	EXIST		27D
44	CLASSROOM 24 X 40	CPT	CPT-1/ CPT-2	RB	RB-1	TWP	FF	TWP-1	TWP	FF	TWP-1	TWP	FF	TWP-1	TWP	FF	TWP-1	(E) ACT	FF	EXIST		44
44A	ALL GENDER RESTROOM	VCT	VCT-1	RB	RB-1	FRP	FF	FRP-1	FRP	FF	FRP-1	FRP	FF	FRP-1	FRP	FF	FRP-1	GYP	FF	PT		44A
101	STAFF R.R.	TILE																(E) ACT	FF	EXIST		101
102	STAFF R.R.	TILE																(E) ACT	FF	EXIST		102
103	STAFF R.R.	TILE																(E) ACT	FF	EXIST		103
104	BOYS R.R.	TILE																(E) ACT	FF	EXIST		104

1 CCD

COLORS, MATERIALS AND FINISHES LEGEND

06 83 16 - FIBERGLASS REINFORCED PANELING
FRP-1 GLASTEEL, GLASLINER FRP 'BRIGHT WHITE' PEBBLED — TYPICAL RESTROOM WALL PANEL

09 30 00 - TILING
VCT-1 ARMSTRONG, 51927 STANDARD EXCELON IMPERIAL TEXTURE, COLOR: FIELD GRAY, SINGLE VCT SHEET WELD W/ 4" SELF COVE — TYPICAL RESTROOM FLOOR

09 65 00 - RESILIENT FLOORING (RUBBER BASE)
RB-1 ROPPE, 700 SERIES 'BLACK' 4"H RUBBER COVE BASE — RUBBER BASE

09 68 16 - CARPET FLOORING
CPT-1 TARKETT, APPLAUSE III, COLOR: 28517 'MARINE' 6' W/ POWERBOND CUSHION RS
CPT-2 TARKETT, ABRASIVE ACTION II, COLOR: 19103 'WINTER GREY' 6' W/ POWERBOND CUSHION RS — TYPICAL FLOORING WALK-OFF CARPET

10 11 00 - RESILIENT TACKABLE WALL COVERING
TWP-1 CHATFIELD CLARKE, COLOR: MISTY GRAY — TYPICAL TACKWALL PANEL

09 91 13 - EXTERIOR PAINTING
PT-1 DUNN EDWARDS, EVERSHIELD, FINISH: 30 - EGGSHELL, COLOR: TBD — TYPICAL EXTERIOR
PT-2 DUNN EDWARDS, ARISTOSHIELD, FINISH: 50 - SEMI-GLOSS, COLOR: TBD — TYPICAL ACCENT ON DOORS, DOOR FRAMES, GUTTERS & FASCIA

ROOM SCHEDULE, MATERIALS AND FINISHES | SCALE: 1 1/2" = 1'-0" | 5

NOTE:
FOR MORE INFORMATION ON FLOOR PLAN, INTERIOR & EXTERIOR ELEVATIONS, SEE PC SHEET **A1.0-M, A4.0-M** AND **A5.0-M** RESPECTIVELY AS PART OF THE PC DRAWINGS.

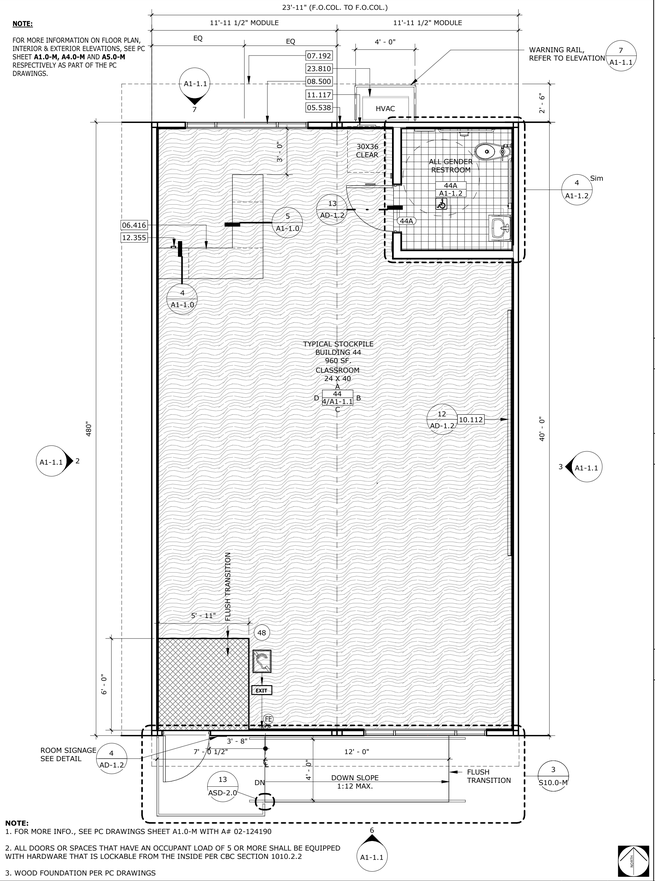

NOTE:
1. FOR MORE INFO., SEE PC DRAWINGS SHEET A1.0-M WITH A# 02-124190
2. ALL DOORS OR SPACES THAT HAVE AN OCCUPANT LOAD OF 5 OR MORE SHALL BE EQUIPPED WITH HARDWARE THAT IS LOCKABLE FROM THE INSIDE PER CBC SECTION 1010.2.2
3. WOOD FOUNDATION PER PC DRAWINGS

PORTABLE FLOOR PLAN - BLDG 44 | SCALE: 1/4" = 1'-0" | 1

NOTE:
SIGNAGE SHALL BE PROVIDED BY CONTRACTOR OR DISTRICT FOR CERTIFICATION. REFER TO PC (A# 04-124190) MODULAR BUILDING FLOOR PLAN ON SHEET A1.0-M.

NEW A.L.S. CALCULATOINS

BUILDING	ROOM NAME	ROOM #	# OF OCC	# OF RECEIVERS REQUIRED = (# OF SEATS)(4%)	# OF HEARING-AID COMATIBLE RECIEVERS = (# OF RECEIEVERES)(25%)	TOTAL # OF RECEIVERS PROVIDED
BLDG '27'	CLASSROOM	27	45	(1ST OCC)X(0.04%) = 0.68, 1 PROVIDED	(1 RECEIVERS)(0.25) = 2.25 0.5, 2 PROVIDED	2 H.A.C. REC.
				TOTAL # OF RECEIVERS PROVIDED - 2	2 MINIMUN HEARING AID COMPATIBLE RECEIEVER	

NOTES:
1. PER CBC SECTION 11B-219.3, THE MIN. # OF RECEIVERS TO BE PROVIDED SHALL BE EQUAL TO 4% OF TOTAL # OF OCCUPANTS, BUT IN NO CASE LESS THAN TWO. 25% MIN. OF RECEIVERS PROVIDED, BUT NO FEWER THAN TWO, SHALL BE HEARING-AID COMPATIBLE

NEW A.L.S. CALCULATOINS

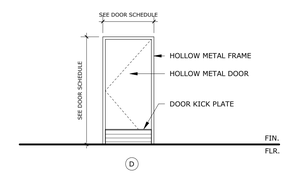

QTY		DESCRIPTION	CATALOG NUMBER	FINISH	MFR
3	EA	HINGE	5BB1 4.5 X 4.5 NRP	630	IVE
1	EA	CORRIDOR LOCK W/ OUTSIDE INDICATOR	L9456T 03N 09-544 OS-OCC	626	SCH
1	EA	FSIC CORE	23-030	626	SCH
1	EA	SURFACE CLOSER	4040XP EDA	689	LCN
1	EA	KICK PLAT	8400 10" X 2" LDW B-CS	630	IVE
1	EA	FLOOR STOP	FS18S	BLK	IVE
1	SET	GASKETING	328AA-S (AT JAMB LEGS)	AA	ZER
1	SET	GASKETING	429AA-S AT HEAD	AA	ZER
1	EA	THRESHOLD	THRESHOLD AS DETAILED		
1	EA	DOOR SWEEP	8192AA	AA	ZER

BLDG 44 RESTROOM 44R DOOR SCHEDULE | SCALE: 1/4" = 1'-0" | 9

AGENCY APPROVAL
File No: ######A\#04-125522

STAMPS

RUHNAU CLARKE ARCHITECTS

CONSULTANT BRANDING

KEYNOTES

GENERAL NOTES

1. VERIFY ALL DIMENSIONS PRIOR TO CONSTRUCTION.
2. ALL DIMENSIONS ARE TO FACE OF STUD, CENTERLINE OF COLUMN OR EDGE OF SLAB, U.N.O.
3. SIGNAGE AND ELEMENTS IDENTIFIED AS "BY OTHERS" OR "BY OWNER" TO BE PROVIDED PER A# 02-124199
4. DEMO EXISTING TACK SURFACE PANELS AND ACT IN ITS ENTIRETY TO EXPOSED STUDS AND STRUCTURE PER RESTROOM PLAN. PROVIDE NEW ACT TO MATCH EXISTING INSTALLATION, PREP AREA TO RECEIVE NEW WORK, PATCH AND REPAIR ELEVATION TO MATCH EXISTING

05.538 EXISTING CLOSURE AT MODULAR JOINT.
06.416 PLASTIC LAMINATE COUNTERTOP, PROVIDE GROMMETS AND RINGS @ 60" O.C. FOR POWER AND DATA
07.192 MODULAR ROOF OVERHEAD PER PC. DRAWINGS PER (A# 04-124190)
07.715 DOWNSPOUT
08.500 EXISTING WINDOW AND FRAME TO REMAIN
09.652 WALL BASE PER FINISH SCHEDULE
10.112 CLASSROOM MARKERBOARD PER DETAIL 12/AD-1.2
10.114 TACKABLE WALL PANEL SYSTEM, PER ROOM FINISH SCHEDULE. REFER TO SPECIFICATIONS 10 11 00 FOR MORE INFO
10.148 EXIT RAMP DOWN SIGNAGE
10.151 ASSISTIVE LISTENING SYSTEM SIGNAGE
10.442 WALL MOUNTED FIRE EXTINGUISHER, SEE DETAIL 10/AD-1.2
11.117 EXISTING ELECTRICAL PANEL
12.355 EDUCATIONAL/LIBRARY CASEWORK
23.370 AIR OUTLET/INLET
23.810 EXISTING BARD HVAC EQUIPMENT TO REMAIN
26.240 SWITHBOARD/PANELBOARD
26.325 EXISTING LIGHT SWITCH

FINISH NOTES

1. ALL FINISHES SHALL COMPLY WITH CBC CHAPTERS 3, 8, & 10, CFC AND CCR TITLE 19 AND STATE OF CALIFORNIA TECHNICAL BULLETIN 117-2013.
2. WALL AND CEILING MATERIALS SHALL NOT EXCEED THE FLAME SPREAD CLASSIFICATIONS IN CBC TABLE 803.13.
3. ALL ADJACENT DISSIMILAR FINISH MATERIALS TO RECEIVE BEAD OF CAULK, U.N.O.
4. ALL EXPOSED STEEL, HOLLOW METAL DOORS AND FRAMES, AND LOUVERS TO BE PAINTED.
5. AT COVE BASE, PROVIDE CONTINUOUS 3/8" RADIUS
6. ALL FLOOR FINISHES SHALL BE STABLE, FIRM, & SLIP RESISTANT PER CBC SECTION 11B-302.1.
7. CARPET / CARPET TILE FLOORING SHALL BE SECURELY ATTACHED WITH FIRM BACKING AND PILE HEIGHT OF 1/2" MAX. PER CBC SECTION 11B-302.2. CARPET EDGES SHALL COMPLY WITH CBC SECTION 11B-303.
8. ALL FLOOR FINISHES SHALL EXTEND BELOW ACCESSIBLE WORK SURFACES, SINKS, ETC. FOR THE REQUIRED TOE/KNEE CLEARANCE.
9. REFER TO CORRESPONDING SPECIFICATIONS FOR BURNING CHARACTERISTICS AND TESTING REQ.
10. FOR FINISHED SCHEDULE, SEE **S/A1-1.1**

FINISH ABBREVIATIONS

ACP	ACOUSTICAL CEILING PANEL (SUSPENDED)	RB	RUBBER BASE
ACT	ACOUSTICAL CEILING TILE	RES	RESINOUS/EPOXY FLOORING
AWP	ACOUSTIC WALL PANEL	RF	RUBBER FLOORING
		RS	ROLLER SHADE SYSTEM
CONC	CONCRETE		
CPL	CEMENT PLASTER	S	SEAL
CPT	CARPET	SEAL	SEALED
		SSM	SOLID SURFACE MATERIAL
EPOXY	EPOXY FLOOR	SV	SHEET VINYL
EPT	EPOXY TERRAZZO		
EXP	EXPOSED	T	TILE
		TWP	TACKABLE WALL PANEL
FF	FACTORY FINISH		
		U.O.S.	UNDERSIDE OF STRUCTURE
GPL	GYPSUM PLASTER		
GWB	GYPSUM WALLBOARD	VCT	VINYL COMPOSITION TILE
GWWB	WATER RESISTANT GWB	VF	VINYL FABRIC
LVT	LUXURY VINYL TILE	WD	WOOD
OP	OPERABLE PARTITION		
PES	PAINT - EGGSHELL		
PL	PLASTIC LAMINATE		
PF	PAINT, FLAT		
PSG	PAINT, SEMI-GLOSS		

FLOOR FINISH LEGEND

PANEL
PT-1
FRP-1

CARPETING
CPT-1
CPT-2

XX OCCUPANCY
ASSISTIVE LISTENING SIGNAGE 15 AD-1.2
EXIT RAMP DOWN SIGN 7 AD-1.2
FE FIRE EXTINGUISHER 10 AD-1.2
ROOM NAME AND NUMBER 4 AD-1.2
ACCESSIBLE RESTROOM SIGNAGE 22 AD-1.2

NOTE:
REFER TO COLORS, MATERIALS AND FINISHES LEGEND FOR ADDITIONAL INFORMATION

NARANCA ES RELOCATABLE CLASSROOM BUILDINGS:

PROJECT No. :1-16-21
9/11/2026 2:55:23 PM

DRAWN BY:
DELTA # 1 DATE Date 1
DELTA # ____ DATE ____
DELTA # ____ DATE ____
DELTA # ____ DATE ____

CHECKED BY:
ADD AFO CCD REV
ADD AFO CCD REV
ADD AFO CCD REV
ADD AFO CCD REV

RUHNAUCLARKE.COM
3775 TENTH STREET, RIVERSIDE CALIFORNIA 92501 (951) 684 4664 / 5751 PALMER WAY, SUITE C, CARLSBAD CALIFORNIA 92010 (760) 438 5899

NARANCA ES RELOCATABLE CLASSROOM BUILDINGS
NARANCA ELEMENTARY SCHOL
1030 NARANCA AVE, EL CAJON, CA 92021
CAJON VALLEY UNION SCHOOL DISTRICT

24" X 40" RELO FLOOR PLAN

A1-1.1

1-16-21

AGENCY APPROVAL
File No: ######A##04-125522

STAMPS

RUHNAU CLARKE ARCHITECTS

CONSULTANT BRANDING

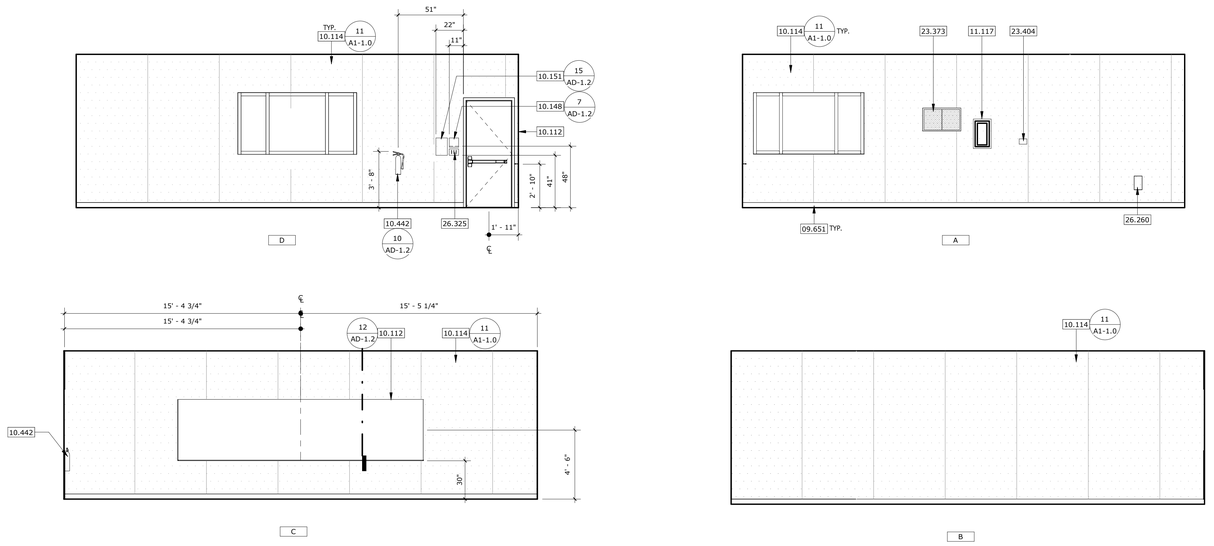

BLDG 27B & 27C INTERIOR ELEVATIONS — SCALE: 1/4" = 1'-0" — 3

NOTE:
FOR MORE INFORMATION ON FLOOR PLAN, INTERIOR & EXTERIOR ELEVATIONS, SEE PC SHEET **A1.0-N, A4.0-N** AND **A5.0-N** RESPECTIVELY AS PART OF THE PC DRAWINGS.

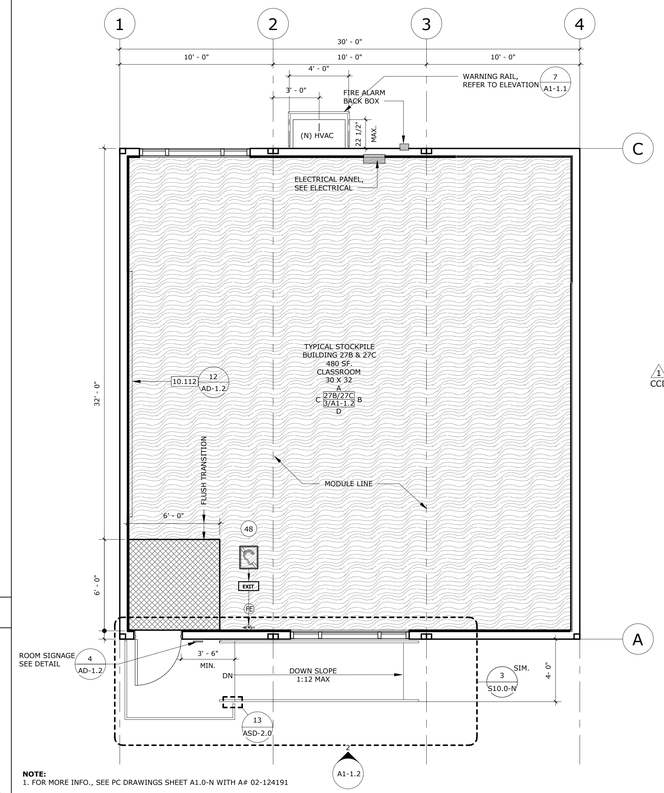

NOTE:
1. FOR MORE INFO., SEE PC DRAWINGS SHEET A1.0-N WITH A# 02-124191

2. ALL DOORS OR SPACES THAT HAVE AN OCCUPANT LOAD OF 5 OR MORE SHALL BE EQUIPPED WITH HARDWARE THAT IS LOCKABLE FROM THE INSIDE PER CBC SECTION 1010.2.2

3. WOOD FOUNDATION PER PC DRAWINGS

PORTABLE FLOOR PLAN - BLDG 27B & 27C — SCALE: 1/4" = 1'-0" — 1

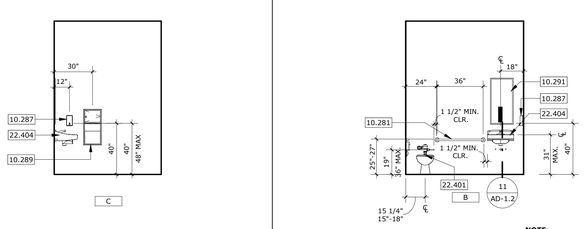

NOTE:
1. FOR MORE INFO., SEE DETAIL 25/AD-1.2 FOR AGE GROUP 9-12

RELO RESTROOM ELEVATIONS — SCALE: 1/4" = 1'-0" — 6

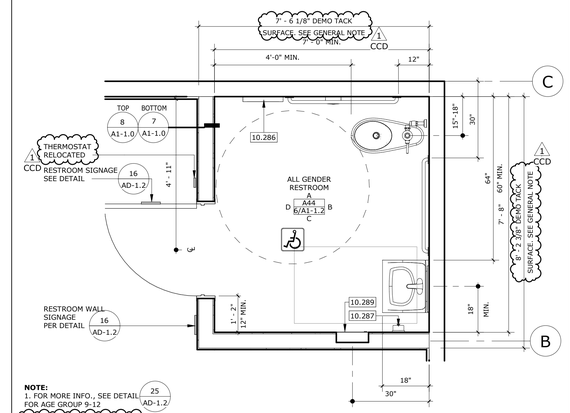

NOTE:
1. FOR MORE INFO., SEE DETAIL 25/AD-1.2 FOR AGE GROUP 9-12
2. DEMO EXISTING TACK SURFACE PANELS AND ACT IN ITS ENTIRETY TO EXPOSED STUDS AND STRUCTURE PER RESTROOM PLAN PRIOR TO NEW RESTROOM INSTALLATION, PREP AREA TO RECEIVE NEW WORK, PATCH AND REPAIR TERMINATION TO MATCH EXISTING

RELO RESTROOM FLOOR PLAN — SCALE: 1/2" = 1'-0" — 4

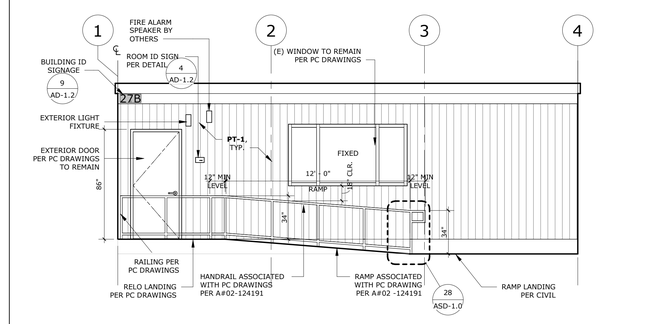

RELO FRONT ELEVATION — SCALE: 1/4" = 1'-0" — 2

GENERAL NOTES

1. VERIFY ALL DIMENSIONS PRIOR TO CONSTRUCTION.
2. ALL DIMENSIONS ARE TO FACE OF STUD, CENTERLINE OF COLUMN OR EDGE OF SLAB, U.N.O.
3. SIGNAGE AND ELEMENTS IDENTIFIED AS "BY OTHERS" OR "BY OWNER" TO BE PROVIDED PER A# 02-124189
4. DEMO EXISTING TACK SURFACE PANELS AND ACT IN ITS ENTIRETY TO EXPOSED STUDS AND STRUCTURE PER RESTROOM PLAN PRIOR TO NEW RESTROOM INSTALLATION, PREP AREA TO RECEIVE NEW WORK, PATCH AND REPAIR TERMINATION TO MATCH EXISTING (1/CCD)

KEYNOTES

08.311	ACCESS PANEL FOR MECHANICAL EQUIPMENT ACCESS
08.950	PLUMBING EXHUAST ROOF VENT
09.214	GYPSUM BOARD CEILING 12/AD-1.2
09.651	RESILIENT BASE
10.112	CLASSROOM MARKERBOARD PER DETAIL
10.114	TACKABLE WALL PANEL SYSTEM, PER ROOM FINISH SCHEDULE. REFER TO SPECIFICATIONS 10 11 00 FOR MORE INFO
10.148	EXIT RAMP DOWN SIGNAGE
10.151	ASSISTIVE LISTENING SYSTEM SIGNAGE
10.281	STAINLESS STEEL GRAB BAR, B.O.D. BOBRICK B-6806 SERIES, OR EQUAL
10.283	SURFACE MOUNTED TOILET PAPER DISPENSER, B.O.D. BOBRICK B-2888 SERIES, OR EQUAL
10.286	SURFACE MOUNTED TOILET SEAT COVER DISPENSER, B.O.D. BOBRICK B-1221 SERIES, OR EQUAL
10.287	SURFACE MOUNTED SOAP DISPENSER, B.O.D. BOBRICK B-2112 SERIES, OR EQUAL
10.289	RECESSED PAPER TOWEL DISPENSER & WASTE RECEPTACLE, B.O.D. BOBRICK B-369 SERIES, OR EQUAL
10.291	STAINLESS STEEL MIRROR, B.O.D. BOBRICK B-165 1836 SERIES, OR EQUAL
10.442	WALL MOUNTED FIRE EXTINGUISHER, SEE DETAIL
11.117	EXISTING ELECTRICAL PANEL
22.401	WATER CLOSET, B.O.D. AMERICAN STANDARD: MADERA FLOWISE 15" FLIUSHOMETER TOILET 3451.001, SLOAN ROYAL 111-1.28: BEMIS COMMERCIAL 195SSSCT, OR EQUAL
22.404	LAVATORY, B.O.D. AMERICAN STANDARD LUCERNE WALL HUNG LAVATORY: CHICAGO FAUSETS, METERING 333-E2805-336CAB, OR EQUAL, SET METERING FAUSET FOR NO LESS THAN 10-SECONDS DURATIONS
23.370	AIR OUTLET/INLET
23.373	EXISTING RETURN GRILLE PER MECHANICAL DRAWINGS
23.404	THERMOSTAT - TOP @ 46" A.F.F. - SEE ELECTRICAL SHEETS (SEE PC. DRAWINGS ON SHEET A1.0N & A1.0A PER A# 04-124204)
26.240	SWITHBOARD/PANELBOARD
26.260	POWER DISTRIBUTION UNIT
26.325	EXISTING LIGHT SWITCH
26.510	INTERIOR LIGHTING

FINISH NOTES

1. ALL FINISHES SHALL COMPLY WITH CBC CHAPTERS 3, 8, & 10, CFC AND CCR TITLE 19 AND STATE OF CALIFORNIA TECHNICAL BULLETIN 117-2013.
2. WALL AND CEILING MATERIALS SHALL NOT EXCEED THE FLAME SPREAD CLASSIFICATIONS IN CBC TABLE 803.13.
3. ALL ADJACENT DISSIMILAR FINISH MATERIALS TO RECEIVE BEAD OF CAULK, U.N.O.
4. ALL EXPOSED STEEL, HOLLOW METAL DOORS AND FRAMES, AND LOUVERS TO BE PAINTED.
5. AT COVE BASE, PROVIDE CONTINUOUS 3/8" RADIUS
6. ALL FLOOR FINISHES SHALL BE STABLE, FIRM, & SLIP RESISTANT PER CBC SECTION 11B-302.1.
7. CARPET / CARPET TILE FLOORING SHALL BE SECURELY ATTACHED WITH FIRM BACKING AND PILE HEIGHT OF 1/2" MAX. PER CBC SECTION 11B-302.2. CARPET EDGES SHALL COMPLY WITH CBC SECTION 11B-303.
8. ALL FLOOR FINISHES SHALL EXTEND BELOW ACCESSIBLE WORK SURFACES, SINKS, ETC. FOR THE REQUIRED TOE/KNEE CLEARANCE.
9. REFER TO CORRESPONDING SPECIFICATIONS FOR BURNING CHARACTERISTICS AND TESTING REQ.
10. FOR FINISHED SCHEDULE, SEE **S/A1-1.1**

FINISH ABBREVIATIONS

ACP	ACOUSTICAL CEILING PANEL (SUSPENDED)	RB	RUBBER BASE
ACT	ACOUSTICAL CEILING TILE	RES	RESINOUS/EPOXY FLOORING
AWP	ACOUSTIC WALL PANEL	RF	RUBBER FLOORING
		RS	ROLLER SHADE SYSTEM
CONC	CONCRETE		
CPL	CEMENT PLASTER	S	SEAL
CPT	CARPET	SEAL	SEALED
		SSM	SOLID SURFACE MATERIAL
EPOXY	EPOXY FLOOR	SV	SHEET VINYL
EPT	EPOXY TERRAZZO		
EXP	EXPOSED	T	TILE
		TWP	TACKABLE WALL PANEL
FF	FACTORY FINISH		
		U.O.S.	UNDERSIDE OF STRUCTURE
GPL	GYPSUM PLASTER		
GWB	GYPSUM WALLBOARD	VCT	VINYL COMPOSITION TILE
GWWB	WATER RESISTANT GWB	VF	VINYL FABRIC
LVT	LUXURY VINYL TILE	WD	WOOD
OP	OPERABLE PARTITION		
PES	PAINT - EGGSHELL		
PL	PLASTIC LAMINATE		
PF	PAINT, FLAT		
PSG	PAINT, SEMI-GLOSS		

FLOOR FINISH LEGEND

PANEL
- PT-1
- FRP-1

CARPETING
- CPT-1
- CPT-2

- XX — OCCUPANCY
- ASSISTIVE LISTENING SIGNAGE 15/AD-1.2
- EXIT — EXIT RAMP DOWN SIGN 7/AD-1.2
- FE — FIRE EXTINGUISHER 10/AD-1.2
- ROOM NAME AND NUMBER 4/AD-1.2
- ACCESSIBLE RESTROOM SIGNAGE 22/AD-1.2

NOTE:
REFER TO COLORS, MATERIALS AND FINISHES LEGEND FOR ADDITIONAL INFORMATION

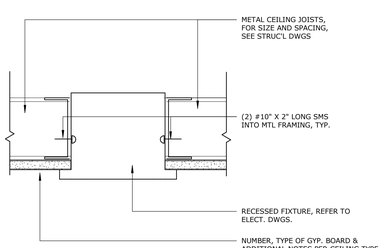

LIGHT FIX. SUPPORT — SCALE: 3" = 1'-0" — 8

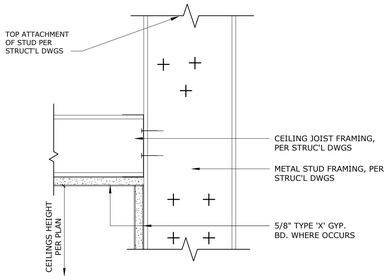

GYP CEILING LAYOUT — SCALE: 3" = 1'-0" — 7

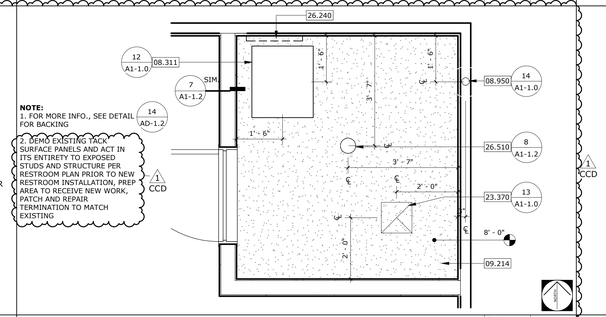

NOTE:
1. FOR MORE INFO., SEE DETAIL FOR BACKING
2. DEMO EXISTING TACK SURFACE PANELS AND ACT IN ITS ENTIRETY TO EXPOSED STUDS AND STRUCTURE PER RESTROOM PLAN PRIOR TO NEW RESTROOM INSTALLATION, PREP AREA TO RECEIVE NEW WORK, PATCH AND REPAIR TERMINATION TO MATCH EXISTING (1/CCD)

REFLECTED CEILING PLAN — SCALE: 1/2" = 1'-0" — 5

NOTE:
SIGNAGE SHALL BE PROVIDED BY CONTRACTOR OR DISTRICT FOR CERTIFICATION. REFER TO PC (A# 02-124191) MODULAR BUILDING FLOOR PLANS ON SHEET, A1.0-N.

NEW A.L.S. CALCULATOINS

BUILDING	ROOM NAME	ROOM #	# OF OCC	# OF RECEIVERS REQUIRED = (# OF SEATS)(4%)	# OF HEARING-AID COMPATIBLE RECEIVERS = (# OF RECEIEVERES)(25%)	TOTAL # OF RECEIVERS PROVIDED
BLDG '27B'	CLASSROOM	28	22	(22 OCC)X(0.04%) = 0.88, 1 PROVIDED	(1 RECEIVERS)(0.25) = .25 0.5, 2 PROVIDED	2 H.A.C. REC.
BLDG '27C'	CLASSROOM	28	22	(22 OCC)X(0.04%) = 0.88, 1 PROVIDED	(1 RECEIVERS)(0.25) = .25 0.5, 2 PROVIDED	2 H.A.C. REC.
				TOTAL # OF RECEIVERS PROVIDED 4	2 MINIMUN HEARING AID COMPATIBLE RECEIEVER	

NOTES:
1. PER CBC SECTION 11B-219.3, THE MIN. # OF RECEIVERS TO BE PROVIDED SHALL BE EQUAL TO 4% OF TOTAL # OF OCCUPANTS, BUT IN NO CASE LESS THAN TWO. 25% MIN. OF RECEIVERS PROVIDED, BUT NO FEWER THAN TWO, SHALL BE HEARING-AID COMPATIBLE

NARANCA ES RELOCATABLE CLASSROOM BUILDINGS:

PROJECT No. :1-16-21
9/11/2026 2:55:24 PM

DRAWN BY:
DELTA # ___1___ DATE ___Date 1___
DELTA # _____ DATE _____
DELTA # _____ DATE _____
DELTA # _____ DATE _____

CHECKED BY:
☐ ADD ☐ AFO ☐ CCD ☐ REV
☐ ADD ☐ AFO ☐ CCD ☐ REV
☐ ADD ☐ AFO ☐ CCD ☐ REV
☐ ADD ☐ AFO ☐ CCD ☐ REV

RUHNAUCLARKE.COM
3775 TENTH STREET, RIVERSIDE CALIFORNIA 92501 (951) 684 4664 / 5751 PALMER WAY, SUITE C, CARLSBAD CALIFORNIA 92010 (760) 438 5899

NARANCA ES RELOCATABLE CLASSROOM BUILDINGS
NARANCA ELEMENTARY SCHOL
1030 NARANCA AVE, EL CAJON, CA 92021
CAJON VALLEY UNION SCHOOL DISTRICT

30" X 32" RELO FLOOR PLAN

A1-1.2

1-16-21

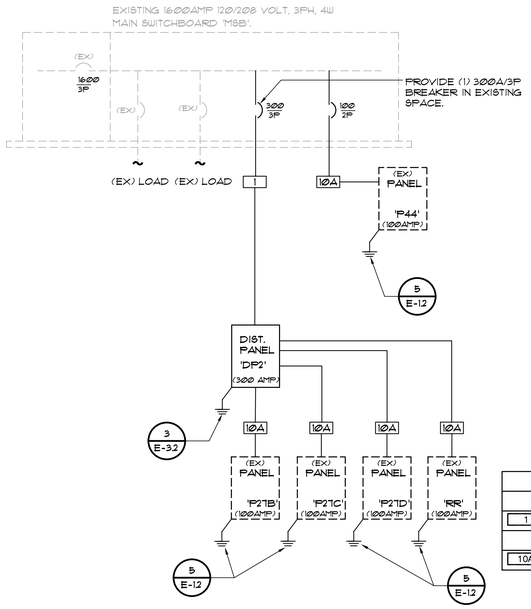

GENERAL NOTES:

1. A FAULT CURRENT AND TIME CURRENT STUDY MUST BE PROVIDED AS DESCRIBED IN THE SPECIFICATIONS PRIOR TO FINAL APPROVAL OF THE POWER EQUIPMENT.
2. UNLESS WHERE OTHERWISE NOTED, ALL WORK INDICATED ON THESE DRAWINGS SHALL BE CONSIDERED NEW WORK.
3. ALL ELECTRICAL GEAR AND EQUIPMENT SHOWN ON ONE-LINE DIAGRAM SHALL BE NEMA 3R UNLESS OTHERWISE NOTED.

600V FEEDER SCHEDULE GENERAL NOTES:

1. ALL CONDUCTOR SHALL BE PROVIDED WITH TYPE THWN-2 INSULATION. REFERENCE SPECIFICATION SECTION 26 05 19 FOR ADDITIONAL REQUIREMENTS.
2. PROVIDE 60 DEGREE COPPER/ALUMINUM RATED TERMINATION FOR ALL FEEDERS SIZED WITH #2 OR SMALLER CONDUCTORS. PROVIDE 75 DEGREE COPPER/ALUMINUM RATED TERMINATIONS FOR ALL FEEDERS SIZED WITH #1 OR LARGER CONDUCTORS.
3. CONTRACTOR SHALL BE RESPONSIBLE FOR ORDERING LUG CONFIGURATION AN ALL EQUIPMENT, BREAKER OF DISCONNECTS TO MATCH FEEDER CONFIGURATIONS INDICATED.
4. WHERE MULTIPLE CONDUIT QUANTITIES ARE INDICATED, CONDUCTOR QUANTITIES AND SIZES SHOWN IN SCHEDULE SHALL BE PROVIDED IN EACH CONDUIT.

	600Volt Feeder Schedule
1	3"C. 4 #350, 1 #3 GND.
10A	1-1/2"C. 3 # 1, 1 # 6 GND.

ELECTRICAL ONE LINE DIAGRAM

NO SCALE

3 / E-3.1

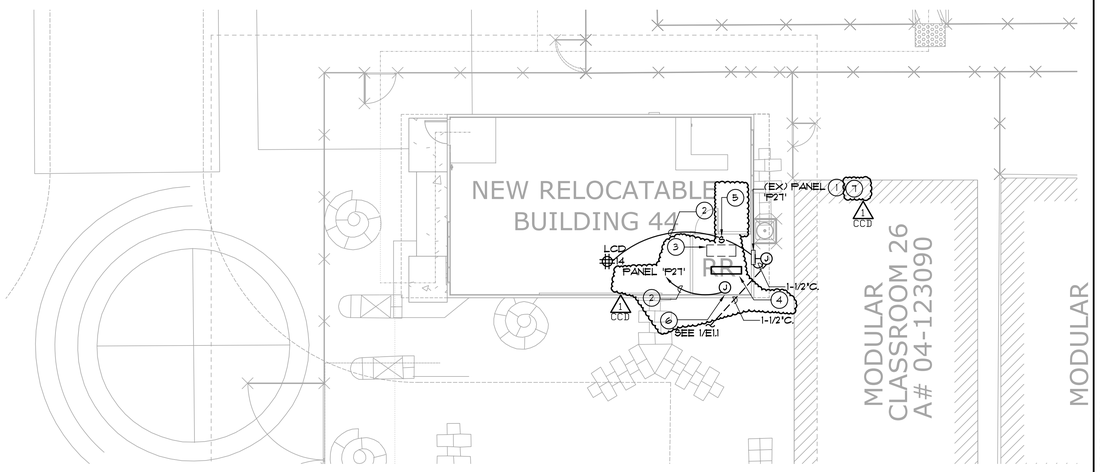

FLOOR PLAN #2 - POWER | SCALE: 1/8" = 1'-0" | 2

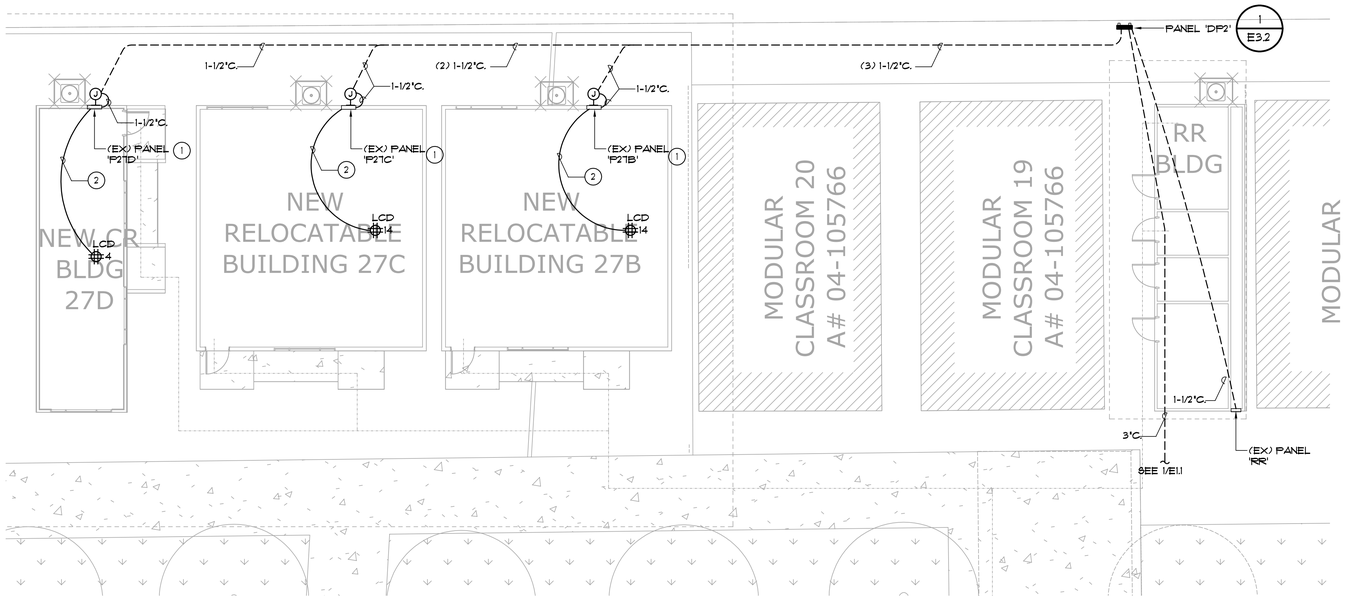

FLOOR PLAN #1 - POWER | SCALE: 1/8" = 1'-0" | 1

STAMPS

#16047 9/9/2026

AGENCY APPROVAL
File No: ########-######

JOHNSON CONSULTING ENGINEERS, INC.
Power | Lighting | Multimedia
Communications | Data Networking
12875 Brookprinter Place, Suite 300
Poway, CA 92064
P 858.679.4030 | F 858.513.0559
www.jce-inc.com

CONSULTANT BRANDING

RUHNAU CLARKE ARCHITECTS

GENERAL NOTES:

1. ALL JUNCTION BOXES SHOWN ON FLOOR PLAN SHALL BE NEMA 3R UNLESS OTHERWISE NOTED.
2. ALL ELECTRICAL GEAR AND EQUIPMENT SHOWN ON ONE-LINE DIAGRAM SHALL BE NEMA 3R UNLESS OTHERWISE NOTED.
3. SEE 3/E-3.1 ONE LINE DIAGRAM FOR WIRING REQUIREMENT.
4. REFERENCE E1.2 FOR TYPICAL SITE DETAILS.

KEY NOTES:

1. PROVIDE (1) 20A/1P BREAKER IN EXISTING SPACE #14.
2. 3/4"C. 2 #12, 1 #12 GND.
3. EXISTING 2X4 TROFFER SHALL BE REMOVED FROM EXISTING CIRCUIT. MAINTAIN EXISTING LIGHTING CIRCUIT CONTINUITY.
4. PROVIDE NEW LED LINEAR STRIP LIGHT. LITHONIA #CSS L48 4000LM MVOLT 40K 80CRI. CONNECT TO EXISTING UNSWITCHED HOT LIGHTING CIRCUIT AND ROUTE UNSWITCHED HOT LIGHTING CIRCUIT VIA WALL SENSOR SWITCH AS REQUIRED.
5. PROVIDE WALL LIGHTING/FAN CONTROL SENSOR SWITCH BY ACUITY SENSOR SWITCH #USRA-2P FAN, AUTOMATIC ON, 120V, WHITE.
6. POWER CONNECTION FOR EXHAUST FAN. EXTEND POWER CONNECTION TO EXHAUST FAN VIA LIGHTING/FAN CONTROL WALL SENSOR SWITCH FOR FAN CONTROL.
7. PROVIDE (1) 20A/1P BREAKER IN EXISTING SPACE FOR RESTROOM EXHAUST FAN.

1 CCD

RELOCATABLE CLASSROOM BUILDINGS:

PROJECT No. :
5/22/2026 9:39:41 AM

DRAWN BY:		CHECKED BY:					
DELTA # 1	DATE 09/09/2026	ADD	AFO	CCD	REV		
DELTA #	DATE	ADD	AFO	CCD	REV		
DELTA #	DATE	ADD	AFO	CCD	REV		
DELTA #	DATE	ADD	AFO	CCD	REV		

RUHNAUCLARKE.COM
3775 TENTH STREET, RIVERSIDE CALIFORNIA 92501 (951) 684 4664 / 5751 PALMER WAY, SUITE C, CARLSBAD CALIFORNIA 92008 (760) 438 5899 / 801 16TH STREET SACRAMENTO, CA 95814 (916) 379 8111

RELOCATABLE CLASSROOM BUILDINGS
1030 NARANCA AVE, EL CAJON, CA 92021
CAJON VALLEY UNION SCHOOL DISTRICT

FLOOR PLAN - POWER | E3.1

RUHNAU CLARKE ARCHITECTS

PROJECT MANUAL

NARANCA ELEMENTARY SCHOOL RELOCATABLE CLASSROOM BUILDINGS

CAJON VALLEY UNION SCHOOL DISTRICT

EL CAJON, CA

CONSTRUCTION DOCUMENTS

Divisions 00 - 33

DSA Application #04 - 125522 File #37-9

1.16.21

June 2026

SECTION 00 01 01
PROJECT TITLE PAGE

NARANCA ES RELOCATABLE CLASSROOM BUILDINGS

CAJON VALLEY UNION SCHOOL DISTRICT

750 E. MAIN STREET, EL CAJON, CA 92020

619.588.3000

WWW.CAJONVALLEY.NET

PROJECT LOCATION

NARANCA ELEMENTARY SCHOOL

1030 NARANCA AVENUE

EL CAJON, CALIFORNIA 92021

PREPARED BY:

ARCHITECT

RUHNAU CLARKE ARCHITECTS

3775 Tenth Street, Riverside CA 92501 - 951.684.4664

5751 Palmer Way, Suite C, Carlsbad, CA 92010 - 760.438.5899

801 16th Street, Sacramento, CA 95814 - 916.379.8111

www.ruhnauclarke.com

Architect's Project Number: 1-16-21

NOTICE: This Project Manual, is an unpublished instrument of service of the authors. It is prepared for use only on this Project and in conjunction with the authors' interpretations, observations, decisions and administration, as described in the Conditions of the Contract. Desired results without these services cannot be assured. Use in whole or in part, without the authors' services and expressed written consent may violate Act 17 U.S.C. par. 301 (1991).

END OF PROJECT TITLE PAGE

SECTION 00 01 02
PROJECT INFORMATION

PART 1 GENERAL

1.01 PROJECT IDENTIFICATION

A. Project Name: Naranca ES Relocatable Classroom Buildings, located at:

1. Architect's Project Number: 1-16-21.

   Naranca Elementary School.

   1030 Naranca Avenue.

   El Cajon, California92021.

B. The Owner, hereinafter referred to as District: Cajon Valley Union School District

   Cajon Valley Union School District

   750 E. Main Street, El Cajon, CA 92020

   www.cajonvalley.net

   619.588.3000

1.02 NOTICE TO PROSPECTIVE BIDDERS

A. These documents constitute an Invitation to Bid to and request for qualifications from General Contractors for the construction of the project described below.

1.03 PROJECT DESCRIPTION

A. Summary Project Description: Relocatable Classrooms.

B. Contract Scope: Grading and underground utilities, Construction, and renovation.

C. Contract Terms: Lump sum (fixed price, stipulated sum).

1.04 PROJECT CONSULTANTS

A. The Architect, hereinafter referred to as Architect: **Ruhnau Clarke Architects**

   3775 Tenth Street, Riverside CA 92501 - 5751 Palmer Way, Suite C, Carlsbad, CA 92010

   www.ruhnauclarke.com

   951.684.4664 - 760.438.5899

1.05 PROCUREMENT DOCUMENTS

A. Availability of Documents: Complete sets of procurement documents may be obtained:

1. From District at the Project Manager's address listed above.

PART 2 PRODUCTS (NOT USED)

PART 3 EXECUTION (NOT USED)

END OF SECTION

IDENTIFICATION STAMP
DIV. OF THE STATE ARCHITECT
APP: 04-125522 INC:
REVIEWED FOR
SS ☑ FLS ☑ ACS ☑
DATE: 08/19/2026

SECTION 00 01 07
SEALS PAGE

ARCHITECT OF RECORD (AOR)

RUHNAU CLARKE ARCHITECTS

3775 Tenth Street, Riverside CA 92501 - 951.684.4664
5751 Palmer Way, Suite C, Carlsbad, CA 92010 - 760.438.5899
801 16th Street, Sacramento, CA 95814 - 916.379.8111
Roger Clarke, Architect of Record C-21340

ELECTRICAL ENGINEER OF RECORD (EEOR)

JOHNSON CONSULTING ENGINEERS, INC.

12875 Brookprinter Place, #300, Poway CA 92064
Monica Goese-Hansen E-14781

CIVIL ENGINEER OF RECORD (CEOR)

RICK ENGINEERING

1770 Iowa Street. Suite 100, Riverside CA 92507
Dennis G Armstrong RCE-48758

END OF SEALS PAGE

SECTION 00 01 10
TABLE OF CONTENTS

PROCUREMENT AND CONTRACTING REQUIREMENTS

DIVISION 00 -- PROCUREMENT AND CONTRACTING REQUIREMENTS

00 01 02 - Project Information

00 01 07 - Seals Page

00 01 10 - Table of Contents

00 40 25 - Request for Information (PreBid)

00 43 25 - Substitution Request Form - During Procurement

00 63 25 - Substitution Request Form - During Construction

SPECIFICATIONS

DIVISION 01 -- GENERAL REQUIREMENTS

01 10 00 - Summary

01 20 00 - Price and Payment Procedures

01 25 00 - Substitution Procedures

01 30 00 - Administrative Requirements

01 30 00.01 - Request for Interpretation (Information)

01 30 00A - Submittal Transmittal

01 35 50 - Requests for Electronic Files

01 35 53 - Security Procedures

01 40 00 - Quality Requirements

01 41 00 - Regulatory Requirements

01 45 33 - Code-Required Special Inspections and Procedures

01 50 00 - Temporary Facilities and Controls

01 60 00 - Product Requirements

01 61 16 - Volatile Organic Compound (VOC) Content Restrictions

01 61 16.01 - Accessory Material VOC Content Certification Form

01 70 00 - Execution and Closeout Requirements

01 71 23 - Field Engineering

01 74 19 - Construction Waste Management and Disposal

01 78 00 - Closeout Submittals

01 78 00.01 - Warranty Form Letter

01 78 39 - Project Record Documents

DIVISION 02 -- EXISTING CONDITIONS

02 41 00 - Demolition

DIVISION 03 -- CONCRETE

03 30 00 - Cast-in-Place Concrete

DIVISION 05 -- METALS

05 50 00 - Metal Fabrications

05 52 13 - Pipe and Tube Railings

DIVISION 06 -- WOOD, PLASTICS, AND COMPOSITES

06 10 53 - Miscellaneous Rough Carpentry

DIVISION 07 -- THERMAL AND MOISTURE PROTECTION

07 92 00 - Joint Sealants

DIVISION 09 -- FINISHES

09 65 00 - Resilient Flooring

09 68 16 - Sheet Carpeting

09 91 13 - Exterior Painting

DIVISION 10 -- SPECIALTIES

10 11 00 - Visual Display Units

10 14 19 - Dimensional Letter Signage

10 14 23 - Panel Signage

10 14 43 - Photoluminescent Signage

DIVISION 26 -- ELECTRICAL

26 01 00 - Electrical General Provisions

26 05 19 - Power Conductors

26 05 26 - Grounding

26 05 33 - Conduit and Fittings

26 05 34 - Outlet and Junction Boxes

26 27 26 - Switches and Receptacles

26 51 14 - LED Lighting Fixtures and Lamps

26 90 90 - Electrical Closeout

DIVISION 27 -- COMMUNICATIONS

27 01 00 - Communications General Provisions

27 10 00 - Voice-Data Infrastructure

27 20 00 - Integrated Audio-Visual System

27 51 16 - Intercom-Clock System

DIVISION 28 -- ELECTRONIC SAFETY AND SECURITY

28 01 00 - Electronic Safety And Security General Provisions

28 13 00 - Security System

28 30 01 - Fire Alarm Voice Evac System

DIVISION 31 -- EARTHWORK

31 10 00 - Site Clearing

31 22 00 - Grading

31 23 16 - Excavation

31 23 16.13 - Trenching

31 23 23 - Fill

DIVISION 32 -- EXTERIOR IMPROVEMENTS

32 12 16 - Asphalt Paving

32 13 13 - Site Concrete

32 31 13 - Chain Link Fences and Gates

DIVISION 33 -- UTILITIES

33 01 10.58 - Disinfection of Water Utility Piping Systems

33 14 16 - Site Water Utility Distribution Piping

33 31 13 - Site Sanitary Sewerage Gravity Piping

END OF SECTION

SECTION 00 40 25
REQUEST FOR INFORMATION (PREBID)

RFI NUMBER: _____ **DATE:** _____

PROJECT NAME: NARANCA ES RELOCATABLE CLASSROOM BUILDINGS PROJECT NO.: 1-16-21

TO: RUHNAU CLARKE ARCHITECTS

3775 Tenth Street, Riverside CA 92501 - 5751 Palmer Way, Suite C, Carlsbad, CA 92010

Attention: _____

Contractor: _____

Address: _____

Request By: _____ Date: _____

BRIEF SUMMARY OF RFI:

Drawing No. _____ Detail No. _____

Specification Section No. __ __ __ Title _____

Article / Paragraph _____ Page _____

DETAILS OF THIS RFI:

Attachments:

RESPONSE WILL BE INCLUDED IN AN ADDENDUM

END OF RFI

SECTION 00 43 25
SUBSTITUTION REQUEST FORM - DURING PROCUREMENT

SUBSTITUTION REQUEST NO. _____

DATE: _____

PROJECT NAME: NARANCA ES RELOCATABLE CLASSROOM BUILDINGS

PROJECT NUMBER: 1-16-21

TO: RUHNAU CLARKE ARCHITECTS

3775 Tenth Street, Riverside CA 92501 - 5751 Palmer Way, Suite C, Carlsbad, CA 92010

From: _____

We hereby submit for your consideration the following product comparisons of the specified product and the proposed substitution. The undersigned fully understands that failure to answer any item below may be cause for rejection of request for substitution.

Request for substitution shall only be made during bidding (not later than 7 days prior to bid opening for inclusion by Addendum) except under conditions beyond control of Contractor.

SPECIFIED PRODUCT: _____

Specification Section No. __ __ __ Title _____

Article / Paragraph _____ Page _____

Drawing No. _____ Detail No. _____

PROPOSED SUBSTITUTION: _____

Manufacturer: _____ Tel: _____

A. Is the point-by-point comparative data attached? **REQUIRED BY A/E** - No__ Yes__

B. Reason request for substitution is being submitted:

DIFFERENCES BETWEEN PROPOSED SUBSTITUTION AND SPECIFIED PRODUCT

A. Does proposed substitution affect in any way the Structural Safety, Access Compliance, or Fire & Life Safety portions of the project? No__ Yes__

Explain:

B. Does proposed substitution affect dimensions, gages, weights, etc. on Drawing? No__ Yes__

Explain:

C. Does proposed substitution require changes in Drawings or design and installation changes? No___ Yes___ *(If yes, cost of Architect and Engineer document changes are the responsibility of the Contractor.*)

Explain:

D. Does proposed substitution affect product cost, delivery time, or construction schedule? No___Yes___ Explain _____

E. Does proposed substitution comply with specified ICC Number, UL Rating, ASTM Numbers? No___ Yes___ Explain _____

F. Does proposed substitution affect other trades and systems such as wiring, piping, ductwork, structure, etc.? No ____ Yes ____ (*Explain which and how*)

G. Does proposed substitution product guarantee differ from that of the specified product? No___ Yes___ Explain

Attach a listing of 3 similar projects (one in service for at least 3 years) using the proposed substitution.

Substantiating Data: Attach product data/brochures and Vendor qualifications for both specified and substitute product. Provide samples for both specified and substitute products, if applicable.

Certification: Undersigned has examined Construction Documents, is familiar with specified product, understands indicated application of product, and understands design intent of the Architect caused by the requested substitution.

Submitted by: _____ _____ _____

(Type Name) (Signature) (Date)

Signature must be made by person having legal authority to bind his firm to the above terms.

END OF SECTION

SECTION 00 63 25
SUBSTITUTION REQUEST FORM - DURING CONSTRUCTION

SUBSTITUTION REQUEST NO. _____

DATE: _____

PROJECT NAME: NARANCA ES RELOCATABLE CLASSROOM BUILDINGS

PROJECT NUMBER: 1-16-21

TO: RUHNAU CLARKE ARCHITECTS

3775 Tenth Street, Riverside CA 92501 - 5751 Palmer Way, Suite C, Carlsbad, CA 92010

From: _____

We hereby submit for your consideration the following product comparisons of the specified product and the proposed substitution. The undersigned fully understands that failure to answer any item below may be cause for rejection of request for substitution.

This request for substitution form shall only be used after the end of the bidding period under conditions beyond control of Contractor.

SPECIFIED PRODUCT: _____

Specification Section No. __ __ __ Title _____

Article / Paragraph _____ Page _____

Drawing No. _____ Detail No. _____

PROPOSED SUBSTITUTION: _____

Manufacturer: _____ Tel: _____

A. Reason request for substitution is being submitted:

DIFFERENCES BETWEEN PROPOSED SUBSTITUTION AND SPECIFIED PRODUCT

A. Does proposed substitution affect in any way the Structural Safety, Access Compliance, or Fire & Life Safety portions of the project? No__ Yes__

Explain

B. Does proposed substitution affect dimensions, gages, weights, etc. on Drawing? No__ Yes__

Explain

C. Does proposed substitution require changes in Drawings or design and installation changes? No___ Yes___ (*If yes, cost of Architect and Engineer document changes are the responsibility of the Contractor.*)

Explain:

D. Does proposed substitution affect product cost, delivery time, or construction schedule?
No___Yes___ Explain _____

E. Does proposed substitution comply with specified ICC Number, UL Rating, ASTM Numbers?
No___ Yes___ Explain _____

F. Does proposed substitution affect other trades and systems such as wiring, piping, ductwork, structure, etc.? No ____ Yes ____ (*Explain which and how*)

1. If yes, has impact on their work been included in price of proposed substitution?
No__ Yes__.

G. Does proposed substitution product guarantee differ from that of the specified product?
No___ Yes___ Explain

If the substitution request is accepted, it will result in:

No cost impact ____ Improve Schedule ____ Credit of $_____

Attach a listing of 3 projects (one in service for at least 3 years) using the proposed substitution.

Substantiating Data: Attach product data/brochures and Vendor qualifications for both specified and substitute product. Provide samples for both specified and substitute products, if applicable.

Certification: Undersigned has examined Construction Documents, is familiar with specified product, understands indicated application of product, and understands design intent of the Architect caused by the requested substitution.

Submitted by: _____ _____ _____

(Type Name) (Signature) (Date)

Signature must be made by person having legal authority to bind his firm to the above terms.

Architect's Comments:

____	Accepted	____	Accepted as Noted	____	Not Accepted	____	Received too Late

Reviewed by:

Architect: _____ Date: _____

District: _____ Date: _____

Division of the State Architect: _____ Date: _____

SECTION 01 10 00
SUMMARY

PART 1 GENERAL

1.01 PROJECT

A. Project Name: Naranca ES Relocatable Classroom Buildings

B. District's Name: Cajon Valley Union School District.

C. Architect's Name: Ruhnau Clarke Architects.

D. The Project consists of the construction of Relocatable Classrooms.

1.02 CONTRACT DESCRIPTION

A. Contract Type: A single prime contract based on a Stipulated Price as described in District Contractor Agreement.

1.03 CONTRACT DOCUMENTS

A. Contract Requirements:

1. General Conditions of the Contract with the District are separate from Division 01 - General Requirements in the Project Manual.
   a. Such "General Conditions" documents are how the Contractor works with the District, not Specifications.
2. Division 01 - General Requirements describes the relationship of how the Architect works with the Contractor through the District and governing agencies (Division of the State Architect).
3. Specifications are found in the various Divisions of the Project Manual.

B. Contract Drawings: The Drawings provided with and identified in the Project Manual are the Drawings referenced in the Agreement.

1. The location, extent and configuration of the required construction and improvements are shown and noted on Drawings.
   a. The Drawings are referenced in the Agreement.
   b. An index of Drawings is included in the set of Drawings.
2. Drawings are arranged into series according to design discipline. Such organization and all references to trades, subcontractor, specialty contractor or supplier shall not control the Contractor in dividing the Work among subcontractors or in establishing the extent of the Work to be performed by any trade.
3. Where the terms "as shown", "as indicated", "as noted", "as detailed", "as scheduled", or terms of like meaning, are used in the Drawings or Specifications, it shall be understood that reference is being made to the Drawings referenced in the Agreement.
4. Where reference to the word "plans" is made anywhere in Drawings, Specifications and related Contract Documents, it shall be understood to mean the Drawings referenced in the Agreement.

C. Contract Specifications: The Specifications provided in the Project Manual are the Specifications referenced in the Agreement.
   1. Specifications are organized by Divisions and Sections in accordance with the recommended practices of the Construction Specifications Institute.
      a. Such organization shall not control the Contractor in dividing the Work among subcontractors or in establishing the extent of Work to be performed by any trade.
   2. Specifications are included in the Project Manual, which may also include other Bidding and Contract Documents.
      a. Contents of the Project Manual are listed in Document 00 01 10 - Table of Contents, in the Project Manual.

1.04 WORK BY DISTRICT

A. Concurrent Work Under Separate Contracts:
   1. Work Under Separate Contracts: District may award separate contracts for products and installation for improvements and other work as may be indicated on Drawings as NIC (Not in Contract).
   2. Relationship to Work Under the Contract:
      a. Work under the Contract include all provisions necessary to make such concurrent work under separate contracts complete in every respect and fully functional, including field finishing.
      b. Provide necessary backing, supports, piping, conduit, conductors and other such provisions from point of service to point of connection, as shown on Drawings and specified herein.
   3. Related Contract Documents:
      a. District will make available, in a timely manner, drawings and specifications of work under separate contracts for coordination and further description of that work.
      b. Such drawings and other data required for the coordination of the work of separate contracts with the Work of this Contract may be included with the Contract Documents.
      c. If so, they are provided for convenience only and are not to be considered Contract Documents produced by Architect or Architect's consultants.
   4. Permits, Notices and Fees:
      a. Permits, Notices and Fees: Notices required by and approvals required of authorities having jurisdiction for work under separate contracts and related fees will be solely the responsibility of District.
B. Items noted NIC (Not in Contract) will be supplied and installed by District after Date of Substantial Completion.
   1. Movable cabinets.
   2. Furnishings.
   3. Small equipment.
   4. Artwork.
C. OFCI District will supply the following for installation by Contractor:

1. District may furnish, for installation by Contractor, products which are identified on the Drawings and in the Specifications as OFCI (Owner-Furnished/Contractor-Installed).

D. Relationship to Work Under the Contract:

1. Work under the Contract includes all provisions necessary to fully incorporate such products into the Work, including, as necessary.
   a. Fasteners.
   b. Backing,.
   c. Supports.
   d. Piping.
   e. Conduit.
   f. Conductors.
   g. Other such provisions from point of service to point of connection, for a complete installation.
   h. Field finishing, as shown on Drawings and specified herein.
2. See Section 01 30 00 - Administrative Requirements for additional requirements.

1.05 OWNER OCCUPANCY

A. District intends to continue to occupy adjacent portions of the existing site and/or building during the entire construction period.

B. District intends to occupy the Project by the date stated in the Agreement as the contract completion date.

C. Cooperate with District to minimize conflict and to facilitate District's operations.

D. Schedule the Work to accommodate District occupancy.

1.06 CONTRACTOR USE OF SITE AND PREMISES

A. Construction Operations: Limited to areas noted on Drawings.

B. Arrange use of site and premises to allow:

1. District occupancy.
2. Work by Others.
3. Work by District.

C. Provide access to and from site as required by law and by District:

1. Emergency Building Exits During Construction: Keep all exits required by code open during construction period; provide temporary exit signs if exit routes are temporarily altered.
2. Site Access:
   a. Limit access to site to indicated routes and access points as indicated.
   b. If routes and access points are not indicated, access shall be as approved by District.
   c. Do not restrict access to adjacent properties and do not restrict access for those performing work under separate contracts for the District.
3. Do not obstruct roadways, sidewalks, or other public ways without permit.

4. Construction Limit:
    a. Limit construction activities to areas indicated on Drawings as Project Area or, if not indicated, to areas within the parcel as described in the legal description on the Drawings.
    b. Refer also to Section 01 50 00 - Temporary Construction Facilities and Controls for additional requirements.

D. Existing building spaces may not be used for storage.

E. Time Restrictions:
1. Limit conduct of especially noisy, malodorous, and dusty exterior work to the hours of those required by local statute or the Agreement.

F. Utility Outages and Shutdown:
1. Limit disruption of utility services to hours the building is unoccupied.
2. Do not disrupt or shut down life safety systems, including but not limited to fire sprinklers and fire alarm system, without 7 days notice to District and authorities having jurisdiction.
3. Prevent accidental disruption of utility services to other facilities.

END OF SECTION

SECTION 01 20 00
PRICE AND PAYMENT PROCEDURES

PART 1 GENERAL

1.01 SECTION INCLUDES

A. Procedures for preparation and submittal of applications for progress payments.

B. Documentation of changes in Contract Sum and Contract Time.

C. Change procedures.

D. Correlation of Contractor submittals based on changes.

E. Procedures for preparation and submittal of application for final payment.

1.02 RELATED REQUIREMENTS

A. Section 01 78 00 - Closeout Submittals: Project record documents.

1.03 SCHEDULE OF VALUES

A. Use Schedule of Values Form: Form provided by District.

B. Electronic media printout including equivalent information will be considered in lieu of standard form specified; submit draft to Architect for approval.

C. Submit Schedule of Values in duplicate within 15 days after date established in Notice to Proceed.

1. Submit schedule in a spreadsheet calculated format, such as Excel, based upon the attached Schedule of Values augmented by the Table of Contents of this Project Manual.

D. Format: Utilize the Table of Contents of this Project Manual. Identify each line item with number and title of the major specification section. Identify site mobilization, bonds and insurance, and record drawings .

E. Where work is separated into phases requiring separately phased payments, provide separate schedule for each phase.

F. Where work involves multiple sites and/or "A" number, provide separate schedules for each site and/or "A" number.

G. Where scope of work involves multiples buildings/structures, provide separate schedule for each building.

H. Include in each line item, the amount of Allowances specified in this section.

I. Include separately from each line item, a direct proportional amount of Contractor's overhead and profit.

J. Revise schedule to list approved Change Orders, with each Application For Payment.

1. List each authorized Change Order as an extension on the continuation sheet, listing the Change Order number and dollar value as for an original portion of Work.

1.04 APPLICATIONS FOR PROGRESS PAYMENTS

A. Payment Period: Submit at intervals stipulated in the Agreement.

1. Substantiating information will normally be required only for those portions of Work whose completion state cannot be readily determined by observation of the completed Work.

B. Use Form Form as provided by District.

C. Electronic media printout including equivalent information will be considered in lieu of standard form specified; submit sample to Architect for approval.

D. Forms filled out by hand will not be accepted.

E. For each item, provide a column for listing each of the following:

1. Item Number.
2. Description of work.
3. Scheduled Values.
4. Previous Applications.
5. Work in Place and Stored Materials under this Application.
6. Authorized Change Orders.
7. Total Completed and Stored to Date of Application.
8. Balance to Finish.
9. Retainage.

F. Execute certification by signature of authorized officer.

G. Use data from approved Schedule of Values. Provide dollar value in each column for each line item for portion of work performed and for stored products.

H. List each authorized Change Order as a separate line item, listing Change Order number and dollar amount as for an original item of work.

1. No Change Orders shall be included with Application for Payment until approved in writing by District and Architect. Also approved by DSA when appropriate.

I. Submit one electronic and no hard-copies of each Application for Payment.

J. Include the following with the application:

1. Transmittal letter as specified for submittals in Section 01 30 00.
2. Construction progress schedule, revised and current as specified in Section 01 30 00.
3. Current construction photographs specified in Section 01 30 00.
4. Partial release of liens from major subcontractors and vendors.
   a. Provide with each Application for Payment lien releases from all subcontractors, workers and materials suppliers employed for the Project covering their portion of Work to date for which payment application is made. Lien release forms will be provided by District and shall be completed in accordance with directions provided.
5. Project record documents as specified in Section 01 78 00, for review by District which will be returned to the Contractor.
6. Affidavits attesting to off-site stored products.

K. When Architect requires substantiating information, submit data justifying dollar amounts in question. Provide one copy of data with cover letter for each copy of submittal. Show application number and date, and line item by number and description.

1.05 ADDENDA

A. Addenda are changes issued prior to the signing of the Contract for Construction. These Addenda shall be signed by the Architect and approved by the Division of the State Architect per CAC Sec 4-338(b).

B. These documents may or may not have approved by the Division of the State Architect prior to the close of Bid.

1. If not approved by DSA prior to close of the bidding period, the contract price shall include the Addenda.
2. No work shall proceed regarding any Addendum until approved by DSA.
3. Revisions to Addenda, when approved by DSA, shall be incorporated by an additional addendum or Change Order as indicated below and as provided for in the Contract for Construction and General Conditions.

1.06 MODIFICATION PROCEDURES

A. Construction Changes, General:

1. The following describe administrative procedures to be followed in compliance with provisions of the Conditions of the Contract for Architect's Supplemental Instructions, Construction Change Directives, Construction Change Documents, and Contract Change Orders.
2. The Architect will prepare and issue: Architect's Supplemental Instructions, a Construction Change Directive or a Request for Proposal to be presented to the Contractor for action.

B. Submit name of the individual authorized to receive change documents and who will be responsible for informing others in Contractor's employ or subcontractors of changes to Contract Documents.

C. Contract Change Order Forms: Form as directed by District.

D. For minor changes not involving an adjustment to the Contract Sum or Contract Time, Architect will issue instructions directly to Contractor.

1. Architect's Supplemental Instructions:
   a. Minor changes in the Work, not involving an adjustment in either the Contract Sum or Contract Time, as authorized by the Conditions of the Contract, will be presented by the Architect using the Architect's Bulletin form.
   b. Should the Architect's Supplemental Instructions result in disputed costs and time adjustments, such dispute shall be resolved in accordance with the provisions of the Conditions of the Contract.

E. DSA Construction Change Document approval for substitutions and changes to structural, accessibility, or fire-life-safety portions of approved Drawings and Specifications is required from DSA prior to fabrication and installation. DSA IR A-6; CAC Section 4-215, 4-233(c), & 4-338(c).

1. The approved Construction Change Document shall be signed by:
   a. Architect of Record.
   b. When applicable:

1) Structural Engineer of Record.
2) Mechanical Engineer of Record.
3) Electrical Engineer of Record.
4) Civil Engineer of Record.
5) Delegated Professional Engineer.

c. Division of the State Architect for final approval.

F. For other required changes, not involving structural, accessibility, or fire-life-safety portions of approved Drawings and Specifications, Architect will issue a document signed by District instructing Contractor to proceed with the change, for subsequent inclusion in a Change Order.

1. The document will describe the required changes and will designate method of determining any change in Contract Sum or Contract Time.
2. Promptly execute the change.
3. Construction Change Directive approval is required from DSA prior to installation.
4. Construction Change Directives: In accordance with provisions of the Conditions of the Contract, the District may direct the Contractor to proceed with a change in the Work prior to formal preparation, review and agreement of a Contract Change Order, in order to not delay construction.

a. The Architect will prepare and issue a change document containing a Construction Change Directive which, when signed by the District and the Architect, shall instruct the Contractor to proceed with a change in the Work, for subsequent inclusion in a Contract Change Order.

b. Should the Construction Change Directive result in disputed costs and time adjustments, such dispute shall be resolved in accordance with the provisions of the Conditions of the Contract.

c. Construction Change Directives shall follow procedures specified below for Contract Change Orders except that Contractor shall immediately proceed with the change upon receipt of the signed Change Directive.

G. For changes for which advance pricing is desired, Architect will issue a document that includes a detailed description of a proposed change with supplementary or revised drawings and specifications, a change in Contract Time for executing the change with a stipulation of any overtime work required and the period of time during which the requested price will be considered valid. Contractor shall prepare and submit a fixed price quotation within 14 days.

1. Such Request for Proposal may include an estimate of additions or deductions in Contract Time and Contract Sum for executing the change and may include stipulations regarding overtime work and the period of time the requested response from the Contractor shall be considered valid.

H. Contractor may propose a change by submitting a request for change to Architect, describing the proposed change and its full effect on the work, with a statement describing the reason for the change, and the effect on the Contract Sum and Contract Time with full documentation and a statement describing the effect on work by separate or other contractors. Document any requested substitutions in accordance with Section 01 60 00 .

1. After review of the request and with the District's approval, the Architect will prepare a change document containing a Request for Proposal, as described above.
2. Issuance of such a request by the Architect shall not indicate authorization of the Contractor to proceed with the proposed change.
3. Changes will be approved only by an approved Construction Change Directive and Contract Change Order.

I. Computation of Change in Contract Amount: As specified in the Agreement and Conditions of the Contract.

1. For change requested by Architect for work falling under a fixed price contract, the amount will be based on Contractor's price quotation.
2. For change requested by Contractor, the amount will be based on the Contractor's request for a Change Order as approved by Architect.
3. For pre-determined unit prices and quantities, the amount will be based on the fixed unit prices.
4. For change ordered by Architect without a quotation from Contractor, the amount will be determined by Architect based on the Contractor's substantiation of costs as specified for Time and Material work.

J. Substantiation of Costs: Provide full information required for evaluation.

1. On request, provide the following data:
   a. Quantities of products, labor, and equipment.
   b. Taxes, insurance, and bonds.
   c. Overhead and profit.
   d. Justification for any change in Contract Time.
   e. Credit for deletions from Contract, similarly documented.
2. Support each claim for additional costs with additional information:
   a. Origin and date of claim.
   b. Dates and times work was performed, and by whom.
   c. Time records and wage rates paid.
   d. Invoices and receipts for products, equipment, and subcontracts, similarly documented.
3. For Time and Material work, submit itemized account and supporting data after completion of change, within time limits indicated in the Conditions of the Contract.
   a. Cost and Time Resolution: If amounts for changes in Contract Sum and Contract Time cannot be agreed upon by District and Contractor, amounts shall be resolved in accordance with provisions of the Conditions of the Contract for resolution of disputes and the following:
      1) Contractor shall keep accurate records of time, both labor and calendar days, and cost of materials and equipment.
      2) Contractor shall prepare and submit an itemized account and supporting data after completion of changed Work, within the time limits indicated in the Conditions of the Contract.

3) Contractor shall provide full information as required and requested, for District and Architect to evaluate and substantiate proposed costs and time for the change in the Work.

4) When District and Contractor determine mutually acceptable amounts for changes in Contract Sum and Contract Time, a Contract Change Order shall be executed for these amounts.

5) District shall have the right to audit Contractor's invoices and bid quotations to substantiate costs for Contract Change Orders.

K. Construction Changes Based on Stipulated Sum or Time: Based on the Contractor's response to a Request for Proposal or Construction Change Directive, the District and Architect will review the response.

1. The District and Contractor shall negotiate a mutually acceptable adjustment in Contract Sum and Contract Time, as appropriate, prior to performance of the changed Work.
2. A Contract Change Order for the stipulated amounts shall be prepared based on the stipulated sum and change in time.

L. Execution of Change Orders: Architect will issue Change Orders for signatures of parties as provided in the Conditions of the Contract.

1. When agreement is reached on changes, if any, in the Contract Time and the Contract Sum, the Contractor shall prepare a Contract Change Order using a form as directed by the District, with supplementary documents as necessary to describe the change and the associated costs and schedule impacts.
2. Construction Change Document approval is required from DSA prior to fabrication and installation.
3. Submit Contract Change Orders to District through the Architect.
4. Contractor shall prepare and submit five original sets of documents for each Change Order. District, Architect and DSA shall sign the Change Order indicating acceptance and approval of the change.
   a. Structural Engineer shall also sign the Change Order, when applicable.
5. All Change Orders must be approved by DSA prior to fabrication and installation.
6. Upon approval of the Change Order, Contractor shall promptly execute the change in the Work.

M. After execution of Change Order, promptly revise Schedule of Values and Application for Payment forms to record each authorized Change Order as a separate line item and adjust the Contract Sum.

N. Promptly revise progress schedules to reflect any change in Contract Time, revise sub-schedules to adjust times for other items of work affected by the change, and resubmit.

1. Contractor shall submit revised schedules at the next Application for Payment following approval and acceptance of the Contract Change Order.

O. Promptly enter changes in Project Record Documents.

1.07 APPLICATION FOR FINAL PAYMENT

A. Prepare Application for Final Payment as specified for progress payments, identifying total adjusted Contract Sum, previous payments, and sum remaining due.

B. Application for Final Payment will not be considered until the following have been accomplished:

1. All closeout procedures specified in Section 01 70 00.

PART 2 PRODUCTS - NOT USED

PART 3 EXECUTION - NOT USED

END OF SECTION

SECTION 01 25 00
SUBSTITUTION PROCEDURES

PART 1 GENERAL

1.01 SECTION INCLUDES

A. Procedural requirements for proposed substitutions.

1.02 RELATED REQUIREMENTS

A. Division 00 - Procurement and Contracting Requirements: Restrictions on timing of substitution requests.

B. Section 00 43 25 - Substitution Request Form - During Procurement: Required form for substitution requests made prior to award of contract (During procurement).

C. Section 00 63 25 - Substitution Request Form - During Construction: Required form for substitution requests made after award of contract (During construction).

D. Section 01 30 00 - Administrative Requirements: Submittal procedures, coordination.

E. Section 01 60 00 - Product Requirements: Fundamental product requirements, product options, delivery, storage, and handling.

F. Section 01 61 16 - Volatile Organic Compound (VOC) Content Restrictions: Restrictions on emissions of indoor substitute products.

1.03 DEFINITIONS

A. Substitutions: Changes from Contract Documents requirements proposed by Contractor to materials, products, assemblies, and equipment.

1. Substitutions for Cause: Proposed due to changed Project circumstances beyond Contractor's control.

   a. Unavailability.

   b. Regulatory changes.

2. Substitutions for Convenience: Proposed due to possibility of offering substantial advantage to the Project.

   a. Substitution requests offering advantages solely to the Contractor will not be considered.

PART 2 PRODUCTS - NOT USED

PART 3 EXECUTION

3.01 GENERAL REQUIREMENTS

A. Requests by Contractor to deviate from specified requirements for products, materials, equipment, and methods, or to provide products other than those specified, shall be considered requests for substitutions except under the following conditions:

1. Substitutions are requested during the bidding period, and accepted prior to execution of the Contract. Acceptance shall be in the form of written Addendum to the Bidding documents or revision to the Drawings or Specifications for use as Construction Contract Documents.
2. Changes in products, materials, equipment, and methods of construction are directed by the District or Architect.
3. Contractor options for provision of products and construction methods are specifically stated in the Contract Documents.
4. Change in products, materials, equipment, and methods of construction is required for compliance with Codes, ordinances, regulations, orders and standards of authorities having jurisdiction.

B. Substitution Provisions: Refer to substitution provisions of the Conditions of the Contract, in addition to the requirements specified herein. Provisions for consideration and acceptance of substitutions shall be as follows:

1. Documentation:
   a. Substitutions will not be considered if they are indicated or implied on shop drawing, product data or sample submittals.
   b. All requests for substitution shall be made by separate written request from Contractor.
2. Cost and Time Considerations: Substitutions will not be considered unless a net reduction in Contract Sum or Contract Time results to the District's benefit, including redesign costs, life cycle costs, changes in related Work and overall performance of building systems.
3. Design Revision:
   a. Substitutions will not be considered if acceptance will require substantial revision of the Contract Documents or will substantially change the intent of the design, in the opinion of the Architect.
   b. The intent of the design shall include functional performance and aesthetic qualities.
4. Data: It shall be the responsibility of the Contractor to provide adequate data demonstrating the merits of the proposed substitution, including cost data and information regarding changes in related Work.
5. Determination by Architect:
   a. Architect will determine the acceptability of proposed substitutions and will notify Contractor, in writing within a reasonable time, of acceptance or rejection.
   b. The determination by the Architect regarding functional performance and aesthetic quality shall be final.
6. Non-Acceptance: If a proposed substitution is not accepted, provide the specified product.
   a. If, in the opinion of the Architect, the substitution request is incomplete or has insufficient data to enable a full and thorough review of the intended substitution, the substitution may be summarily refused and determined to be unacceptable.
7. Substitution Limitation: Only one request for substitution will be considered for each product.

C. A Substitution Request for products, assemblies, materials, and equipment constitutes a representation that the submitter:
   1. Has investigated proposed product and determined that it meets or exceeds the quality level of the specified product, equipment, assembly, or system.
      a. Include a signed certification that the Contractor has:
         1) Reviewed the proposed substitution and has determined that the substitution is equivalent or superior in every respect to product requirements indicated or product specified in the Contract Documents.
         2) Certify the proposed substitution is suited for and can perform the purpose or application of the specified product indicated or specified in the Contract Documents.
   2. Agrees to provide the same warranty for the substitution as for the specified product.
   3. Agrees to provide same or equivalent maintenance service and source of replacement parts, as applicable.
   4. Agrees to coordinate installation and make changes to other work that may be required for the work to be complete, with no additional cost to District.
   5. Waives claims for additional costs or time extension that may subsequently become apparent.
      a. Include a signed waiver by the Contractor for changes in the Contract Time or Contract Sum because of the following:
         1) Substitution failed to perform adequately.
         2) Substitution required changes in on other elements of the Work.
         3) Substitution caused problems in interfacing with other elements of the Work.
         4) Substitution was determined to be unacceptable by authorities having jurisdiction.
   6. Agrees to reimburse District and Architect for review or redesign services associated with re-approval by authorities.

D. A Substitution Request for specified installer constitutes a representation that the submitter:
   1. Has acted in good faith to obtain services of specified installer, but was unable to come to commercial, or other terms.

E. Document each request with complete data substantiating compliance of proposed substitution with Contract Documents. Burden of proof is on proposer.
   1. Note explicitly any non-compliant characteristics.

F. Content: Include information necessary for tracking the status of each Substitution Request, and information necessary to provide an actionable response.
   1. Forms indicated and included in the Project Manual are adequate for this purpose, and must be used.
   2. No specific form is required. Contractor's Substitution Request documentation must include the following:
      a. Project Information:

1) Official project name and number, and any additional required identifiers established in Contract Documents.
2) District's, Architect's, and Contractor's names.

b. Substitution Request Information:
1) Discrete and consecutive Substitution Request number, and descriptive subject/title.
2) Indication of whether the substitution is for cause or convenience.
3) Issue date.
4) Reference to particular Contract Document(s) specification section number, title, and article/paragraph(s).
5) Description of Substitution.
6) Reason why the specified item cannot be provided.
7) Differences between proposed substitution and specified item.
8) Description of how proposed substitution affects other parts of work.

c. Attached Comparative Data: Provide point-by-point, side-by-side comparison addressing essential attributes specified, as appropriate and relevant for the item:
1) Physical characteristics.
2) In-service performance.
3) Expected durability.
4) Visual effect.
5) Sustainable design features.
6) Warranties.
7) Other salient features and requirements.
8) Include, as appropriate or requested, the following types of documentation:
(a) Product Data:
(b) Samples.
(c) Certificates, test, reports or similar qualification data.
(d) Drawings, when required to show impact on adjacent construction elements.
9) Include a detailed description, in written or graphic form as appropriate, indicating all changes or modifications needed to other elements of the Work and to construction to be performed by the District and by others under separate Contract with District, that will be necessary if the proposed substitution is accepted.

d. Impact of Substitution:
1) Savings to District for accepting substitution.
(a) Include detailed cost data, including a proposal for the net change, if any, in the Contract Sum.
2) Change to Contract Time due to accepting substitution.

(a) Indicate the substitution's effect on the Construction Schedule. Indicate the effect of the proposed substitution on overall Contract Time and, as applicable, on completion of portions of the Work for use by District or for work under separate contract by District.

G. Limit each request to a single proposed substitution item.

1. Submit an electronic document, combining the request form with supporting data into single document.

3.02 SUBSTITUTION PROCEDURES DURING PROCUREMENT

A. Submittal Time Restrictions:

1. District will consider requests for substitutions only if submitted at least 10 days prior to the date for receipt of bids.

B. Instructions to Bidders specifies time restrictions for submitting requests for substitutions during the bidding period, and the documents required.

C. Pursuant to Section 3400 of the Public Contract Code, requests for substitution will be considered only if received up to 7 days prior to the bid date. Subsequent requests will be considered only in the case of product unavailability, through no fault of the Contractor , or for reasons of cost reducing value analysis requested by the District .

D. Submittal Form (before award of contract):

1. Submit substitution requests by completing the form in Section 00 43 25; see this section for additional information and instructions. Use only this form; other forms of submission are unacceptable.

3.03 SUBSTITUTION PROCEDURES DURING CONSTRUCTION

A. Submittal Form (after award of contract):

1. Submit substitution requests by completing the form in Section 00 63 25; see this section for additional information and instructions. Use only this form; other forms of submission are unacceptable.

B. After Contract award, requests will be considered for cause only; in the case of product unavailability, through no fault of the Contractor , or for reasons of cost reducing value analysis requested by the District.

1. Substitutions will be considered when a product, through no fault of the Contractor, becomes unavailable or unsuitable due to regulatory change.

2. Product Availability Waiver:

a. Substitutions will be considered after 35 day time limit only when a product becomes unavailable due to no fault of Contractor.

b. Failure to place orders for specified products sufficiently in advance of required date for incorporation into the Work will not be considered as a valid reason for which Contractor may request a substitution or deviation from requirements of the Drawings and Specifications.

3. Waiver: At the discretion of the District, limitations on substitutions may be waived.

C. Submit request for Substitution for Cause within 14 days of discovery of need for substitution, but not later than 14 days prior to time required for review and approval by Architect, in order to stay on approved project schedule.

D. Submit request for Substitution for Convenience immediately upon discovery of its potential advantage to the project, but not later than 14 days prior to time required for review and approval by Architect, in order to stay on approved project schedule.

1. In addition to meeting general documentation requirements, document how the requested substitution benefits the District through cost savings, time savings, greater energy conservation, or in other specific ways.
2. Document means of coordinating of substitution item with other portions of the work, including work by affected subcontractors.
3. Bear the costs engendered by proposed substitution of:
   a. District's compensation to the Architect for any required redesign, time spent processing and evaluating the request.
   b. Other construction by District.
   c. Other unanticipated project considerations.

E. Substitutions will not be considered under one or more of the following circumstances:

1. When they are indicated or implied on shop drawing or product data submittals, without having received prior approval.
2. Without a separate written request.
3. When acceptance will require revisions to Contract Documents.

3.04 CONTRACT DOCUMENT REVISIONS:

A. Should a Contractor-proposed substitution or alternative sequence or method of construction require revision of the Contract Drawings or Specifications;

1. Including revisions for the purposes of determining feasibility, scope or cost, or revisions for the purpose of obtaining review and approval by authorities having jurisdiction.
2. Revisions will be made by Architect or other consultant of District who is the responsible design professional, as approved in advance by District.

B. Services of Architect or other consultant of the District, including time spent in researching and reporting on proposed substitutions or alternative sequence and method of construction, shall be paid by Contractor when such activities are considered additional services to the design services contracts of the Architect or other responsible design professional with the District.

C. Costs of services by Architect or other responsible design professional of the District shall be paid on a time and materials basis, based on current hourly fee schedules, with reproduction, long distance telephone and shipping costs reimbursable at cost plus usual and customary mark-up for handling and billing.

D. Such fees shall be paid whether or not the proposed substitution or alternative sequence or method of construction is ultimately accepted by District and a Change Order is executed.

E. Such fees shall be paid from Contractor's portion of savings, if a net reduction in Contract Sum results. If fees exceed Contractor's portion of net reduction, Contractor shall pay all remaining fees unless otherwise agreed in advance by the District.

F. Such fees owed shall be deducted from the amount owed Contractor on the Application for Payment next made following completion of revised Contract Drawings and Specifications or completion of research and other services. District will then pay Architect or other consultant of the District.

G. Certain substitutions require approval from DSA.

1. Substitutions affecting DSA-regulated items shall be considered as construction change documents (CCD's) and shall be approved by DSA prior to construction per DSA IR A-6 and Section 338(c) Part 1, Title 24 CCR. See Section 01 20 00 - Price and Payment Procedures.

3.05 RESOLUTION

A. Architect may request additional information and documentation prior to rendering a decision. Provide this data in an expeditious manner.

B. Architect will notify Contractor in writing of decision to accept or reject request.

1. Architect's decision following review of proposed substitution will be noted on the submitted form.

3.06 ACCEPTANCE

A. Accepted substitutions change the work of the Project. They will be documented and incorporated into work of the project by Change Order, Construction Change Directive, Architectural Supplementary Instructions, or similar instruments provided for in the Conditions of the Contract.

3.07 CLOSEOUT ACTIVITIES

A. See Section 01 78 00 - Closeout Submittals, for closeout submittals.

B. Include completed Substitution Request Forms as part of the Project record. Include both approved and rejected Requests.

3.08 ATTACHMENTS

A. A facsimile of the Substitution Request Form (During Construction) required to be used on the Project is included after this section.

END OF SECTION

SECTION 01 30 00
ADMINISTRATIVE REQUIREMENTS

PART 1 GENERAL

1.01 SECTION INCLUDES

A. General administrative requirements.

B. Electronic document submittal service.

C. Preconstruction meeting.

D. Site mobilization meeting.

E. Progress meetings.

F. Construction progress schedule.

G. Contractor's daily reports.

H. Progress photographs.

I. Submittals for review, information, and project closeout.

J. Number of copies of submittals.

K. Requests for Interpretation or Information (RFI) procedures.

L. Submittal procedures.

1.02 RELATED REQUIREMENTS

A. Section 01 60 00 - Product Requirements: General product requirements.

B. Section 01 70 00 - Execution and Closeout Requirements: Additional coordination requirements.

C. Section 01 78 00 - Closeout Submittals: Project record documents; operation and maintenance data; warranties and bonds.

D. Technical Product Sections: Procedures for specific submittals specified in those Sections to be made at Contract closeout.

1.03 DEFINITIONS

A. Action Submittals: Written and graphic information that requires responsive action by District Representative and Architect or other responsible design professional.

B. Informational Submittals: Written information that does not require responsive action by District Representative and Architect or other responsible design professional.

C. Unsolicited Submittals: Action or informational submittals not required by the Contract Documents or not requested by the reviewer. Unsolicited submittals may be returned with notation "not reviewed."

D. Product Data: Standard published information ("catalog cuts") and specially prepared data for the Work of the Contract, including standard illustrations, schedules, brochures, diagrams, performance charts, instructions and other information to illustrate a portion of the Work.

E. Request for Interpretation or Information (RFI): A document submitted by the Contractor requesting clarification of a portion of the Contract Documents, hereinafter referred to as an RFI.

F. Samples: Physical examples that demonstrate the materials, finishes, features, workmanship and other characteristics of a portion of the Work. Accepted samples shall serve as quality basis for evaluating the Work.

G. Shop Drawings, Product Data and Samples: Instruments prepared and submitted by Contractor, for Contractor's benefit, to communicate to Architect the Contractor's understanding of the design intent, for review and comment by Architect on the conformance of the submitted information to the general intent of the design. Shop drawings, product data and samples are not Contract Documents.

H. Shop Drawings: Drawings, diagrams, schedules and illustrations, with related notes, specially prepared for the Work of the Contract, to illustrate a portion of the Work.

I. Other Submittals: Technical data, test reports, calculations, surveys, certifications, special warranties and guarantees, operation and maintenance data, extra stock and other submitted information and products shall not be considered as Contract Documents but shall be information from Contractor to Architect to illustrate a portion of the Work for confirmation of understanding of design intent.

1.04 REFERENCE STANDARDS

1.05 GENERAL ADMINISTRATIVE REQUIREMENTS

A. Comply with requirements of Section 01 70 00 - Execution and Closeout Requirements for coordination of execution of administrative tasks with timing of construction activities.

B. Make the following types of submittals to Architect:

1. Requests for Interpretation or Information (RFI).
2. Requests for substitution.
3. Shop drawings, product data, and samples.
4. Test and inspection reports.
5. Design data.
6. Manufacturer's instructions and field reports.
7. Applications for payment and change order requests.
8. Progress schedules.
9. Coordination drawings.
10. Correction Punch List and Final Correction Punch List for Final Inspection.
11. Closeout submittals.

PART 2 PRODUCTS - NOT USED

PART 3 EXECUTION

3.01 ELECTRONIC DOCUMENT SUBMITTAL SERVICE

A. All documents transmitted for purposes of administration of the contract are to be in electronic (PDF, MS Word, or MS Excel) format, as appropriate to the document, and transmitted via an Internet-based submittal service that receives, logs and stores documents, provides electronic stamping and signatures, and notifies addressees via email.

1. Besides submittals for review, information, and closeout, this procedure applies to Requests for Interpretation or Information (RFIs), progress documentation, contract modification documents (e.g. supplementary instructions, change proposals, change orders), applications for payment, field reports and meeting minutes, Contractor's correction punchlist, and any other document any participant wishes to make part of the project record.
2. Contractor and Architect are required to use this service.
3. It is Contractor's responsibility to submit documents in allowable format.
4. Subcontractors, suppliers, and Architect's consultants are to be permitted to use the service at no extra charge.
5. Users of the service need an email address, internet access, and PDF review software that includes ability to mark up and apply electronic stamps (such as Adobe Acrobat, www.adobe.com, or Bluebeam PDF Revu, www.bluebeam.com), unless such software capability is provided by the service provider.
6. Unless specifically requested, paper document transmittals will not be reviewed; emailed electronic documents will not be reviewed.
7. All other specified submittal and document transmission procedures apply, except that electronic document requirements do not apply to samples or color selection charts.

B. Cost: The cost of the service is to be paid by Contractor; include the cost of the service in the Contract Sum.

C. Submittal Service: The selected service is:

1. Bluebeam Software Inc.; Bluebeam Revu Studio: www.bluebeam.com.
2. Other Service acceptable to both District and Architect.
   a. Direct email with PDF copies.

D. Training: One, one-hour, web-based training session will be arranged for all participants, with representatives of Architect and Contractor participating; further training is the responsibility of the user of the service.

1. Representatives of District are scheduled and included in this training.

E. Project Closeout: Architect will determine when to terminate the service for the project and is responsible for obtaining archive copies of files for District.

3.02 PRECONSTRUCTION MEETING

A. Project Coordinator will schedule a meeting after Notice of Award.

B. Attendance Required:
   1. District.
   2. Architect.
   3. Contractor.

C. Agenda:
   1. Execution of District-Contractor Agreement.
   2. Submission of executed bonds and insurance certificates.
   3. Distribution of Contract Documents.
   4. Submission of list of subcontractors, list of products, schedule of values, and progress schedule.
   5. Submission of initial Submittal schedule.
   6. Designation of personnel representing the parties to Contract and Architect.
   7. Procedures and processing of field decisions, submittals, substitutions, applications for payments, proposal request, Change Orders, and Contract closeout procedures.
   8. Scheduling.

D. Record minutes and distribute copies within two days after meeting to participants, with two copies to Architect, District, participants, and those affected by decisions made.

3.03 SITE MOBILIZATION MEETING

A. District will schedule meeting at the Project site prior to Contractor occupancy.

B. Attendance Required:
   1. Contractor.
   2. District.
   3. Architect.
   4. Special consultants.
   5. Contractor's superintendent.
   6. Major subcontractors.
   7. Project Inspector of Record.
   8. DSA Field Representative.

C. Agenda:
   1. Designation of Key Personnel: Contractor shall designate key personnel and provide a name and address list which includes the following:
      a. Contractor: Project Manager and Superintendent.
      b. Major subcontractors: Principal/Project Manager and Superintendent.
      c. Major materials suppliers: Contact person.
   2. Use of premises by District and Contractor.
      a. Site access restrictions, if any, and requirements to avoid disruption of operations at adjoining facilities or operations.

b. Construction Facilities and Temporary Utilities: Designate storage and staging areas, construction office areas; review temporary utility provisions; present District's requirements for use of premises.

3. District's requirements.
4. Construction facilities and controls provided by District.
5. Temporary utilities provided by District.
6. Survey and building layout.
7. Security and housekeeping procedures.
8. Schedules.
   a. Distribute and discuss initial construction schedule and critical work sequencing of major elements of Work;
   b. Include coordination of District Furnished / Contractor Installed (OFCI) products;
   c. Work under separate contracts by serving utility agencies;
   d. Work under separate contracts by companies and District.
9. Application for payment procedures.
10. Procedures for testing.
11. Procedures for maintaining record documents.
12. Requirements for start-up of equipment.
13. Inspection and acceptance of equipment put into service during construction period.

D. Record minutes and distribute copies within two days after meeting to participants, with two copies to Architect, District, participants, and those affected by decisions made.

3.04 PROGRESS MEETINGS

A. Schedule and administer meetings throughout progress of the work at maximum bi-weekly intervals.

B. Meeting Time and Location: As mutually agreed by District, Architect, and Contractor, at on-site location.

C. Attendance Required:
   1. Contractor.
   2. District.
   3. Architect.
   4. Special consultants.
   5. Contractor's superintendent.
   6. Major subcontractors.
   7. Project Inspector of Record.

D. Agenda:
   1. Review minutes of previous meetings.
   2. Review of work progress.
   3. Field observations, problems, and decisions.

4. Identification of problems that impede, or will impede, planned progress.
5. Review of submittals schedule and status of submittals.
6. Review of RFIs log and status of responses.
7. Review of off-site fabrication and delivery schedules.
8. Maintenance of progress schedule.
9. Corrective measures to regain projected schedules.
10. Planned progress during succeeding work period.
11. Coordination of projected progress.
12. Maintenance of quality and work standards.
13. Effect of proposed changes on progress schedule and coordination.
14. Other business relating to work.

E. Record minutes and distribute copies within two days after meeting to participants, with copies to Architect, District, participants, and those affected by decisions made.

3.05 CONSTRUCTION PROGRESS SCHEDULE

A. Within 10 days after date of the Agreement, submit preliminary schedule defining planned operations for the first 60 days of work, with a general outline for remainder of work.

B. Contractor's Review: All schedules shall be reviewed and approved by Contractor prior to submission for Architect's and District's review.

C. Reviews by Architect and District will be to ascertain the general status of construction and shall not be interpreted to establish or approve the means, methods, techniques and sequences of construction.

D. If preliminary schedule requires revision after review, submit revised schedule within 10 days.

E. Within 20 days after review of preliminary schedule, submit draft of proposed complete schedule for review.

1. Include written certification that major contractors have reviewed and accepted proposed schedule.

F. Within 10 days after joint review, submit complete schedule.

G. Submit updated schedule with each Application for Payment.

3.06 DAILY CONSTRUCTION REPORTS

A. Include only factual information. Do not include personal remarks or opinions regarding operations and/or personnel.

B. In addition to transmitting electronically a copy to District and Architect, submit two printed copies at weekly intervals.

1. Submit in format acceptable to District.
2. Submit using required form, a sample of which is appended to this section.

C. Prepare a daily construction report recording the following information concerning events at Project site and project progress:

1. Date.

2. High and low temperatures, and general weather conditions.
3. List of subcontractors at Project site.
4. List of separate contractors at Project site.
5. Approximate count of personnel at Project site.
   a. Include a breakdown for supervisors, laborers, journeymen, equipment operators, and helpers.
6. Major equipment at Project site.
7. Material deliveries.
8. Safety, environmental, or industrial relations incidents.
9. Meetings and significant decisions.
10. Unusual events (submit a separate special report).
11. Stoppages, delays, shortages, and losses. Include comparison between scheduled work activities (in Contractor's most recently updated and published schedule) and actual activities. Explain differences, if any. Note days or periods when no work was in progress and explain the reasons why.
12. Meter readings and similar recordings.
13. Emergency procedures.
14. Directives and requests of authority having jurisdiction (AHJ).
15. Change Orders received and implemented.
16. Testing and/or inspections performed.
17. List of verbal instruction given by District and/or Architect.
18. Signature of Contractor's authorized representative.

3.07 PROGRESS PHOTOGRAPHS

A. Submit photographs with each application for payment, taken not more than 3 days prior to submission of application for payment.

B. Maintain one set of all photographs at project site for reference; same copies as submitted, identified as such.

C. Photography Type: Digital; electronic files.

D. Provide photographs of site and construction throughout progress of work produced by an experienced photographer, acceptable to Architect.

E. In addition to periodic, recurring views, take photographs of each of the following events:
   1. Completion of site clearing.
   2. Excavations in progress.
   3. Foundations in progress and upon completion.
   4. Structural framing in progress and upon completion.
   5. Enclosure of building, upon completion.
   6. Final completion, minimum of ten (10) photos.

F. Take photographs as evidence of existing project conditions as follows:

1. Interior views: each elevation, floor and ceilings prior to demolition.
2. Exterior views: each elevation, roof, each area of work and areas adjacent to construction limits and areas adjacent to construction limits.

G. Views:

1. Provide non-aerial photographs from four cardinal views at each specified time, until date of Final Inspection.
2. Consult with Architect for instructions on views required.
3. Provide factual presentation.
4. Provide correct exposure and focus, high resolution and sharpness, maximum depth of field, and minimum distortion.
5. Point of View Sketch: Provide sketch identifying point of view of each photograph.

H. Digital Photographs: 24 bit color, minimum resolution of 1600 by 1200 ("2 megapixel"), in JPG format; provide files unaltered by photo editing software.

1. Delivery Medium: Via email.
2. File Naming: Include project identification, date and time of view, and view identification.
3. Point of View Sketch: Include digital copy of point of view sketch with each electronic submittal; include point of view identification in each photo file name.
4. PDF File: Assemble all photos into printable pages in PDF format, with 2 to 3 photos per page, each photo labeled with file name; one PDF file per submittal.
5. Photo CD(s): Provide 1 copy including all photos cumulative to date and PDF file(s), with files organized in separate folders by submittal date.
6. Hard Copy: Printed hardcopy (grayscale) of PDF file and point of view sketch.

3.08 REQUESTS FOR INTERPRETATION OR INFORMATION (RFI)

A. Definition: A request seeking one of the following:

1. An interpretation, amplification, or clarification of some requirement of Contract Documents arising from inability to determine from them the exact material, process, or system to be installed; or when the elements of construction are required to occupy the same space (interference); or when an item of work is described differently at more than one place in the Contract Documents.
2. A resolution to an issue which has arisen due to field conditions and affects design intent.

B. Whenever possible, request clarifications at the next appropriate project progress meeting, with response entered into meeting minutes, rendering unnecessary the issuance of a formal RFI.

C. Preparation: Prepare an RFI immediately upon discovery of a need for interpretation of Contract Documents. Failure to submit a RFI in a timely manner is not a legitimate cause for claiming additional costs or delays in execution of the work.

1. Prepare a separate RFI for each specific item.
   a. Review, coordinate, and comment on requests originating with subcontractors and/or materials suppliers.

b. Do not forward requests which solely require internal coordination between subcontractors.

2. Prepare in a format and with content acceptable to District.

3. Combine RFI and its attachments into a single electronic file. PDF format is preferred.

D. Reason for the RFI: Prior to initiation of an RFI, carefully study all Contract Documents to confirm that information sufficient for their interpretation is definitely not included.

1. Include in each request Contractor's signature attesting to good faith effort to determine from Contract Documents information requiring interpretation.

a. Submit RFIs from subcontractors and material suppliers through, be reviewed by and be attached to an RFI prepared, signed and submitted by Contractor.

1) RFIs from subcontractors and material suppliers are to be:

(a) Reviewed by Contractor.

(b) Corrected and rewritten to clarify as required by Contractor.

(c) Placed on the proper form, then signed, and submitted by Contractor.

(d) RFIs submitted directly by subcontractors or material suppliers will be returned unanswered to the Contractor.

2) RFIs submitted directly by subcontractors or material suppliers will be returned unanswered to the Contractor.

b. Review all subcontractor- and supplier-initiated RFIs and take actions to resolve issues of coordination, sequencing and layout of the Work.

1) RFIs submitted to request clarification of issues related to means, methods, techniques and sequences of construction or for establishing trade jurisdictions and scopes of subcontracts will be returned without response.

(a) Such issues are solely the Contractor's responsibility.

2) Contractor is responsible for delays resulting from the necessity to resubmit an RFI due to insufficient or incorrect information presented in the RFI.

2. Unacceptable Uses for RFIs: Do not use RFIs to request the following::

a. Approval of submittals (use procedures specified elsewhere in this section).

b. Approval of substitutions (see Section - 01 60 00 - Product Requirements)

c. Changes that entail change in Contract Time and Contract Sum (comply with provisions of the Conditions of the Contract).

d. Different methods of performing work than those indicated in the Contract Drawings and Specifications (comply with provisions of the Conditions of the Contract).

3. Improper RFIs: Requests not prepared in compliance with requirements of this section, and/or missing key information required to render an actionable response. They will be returned without a response, with an explanatory notation.

4. Frivolous RFIs: Requests regarding information that is clearly indicated on, or reasonably inferable from, Contract Documents, with no additional input required to clarify the question. They will be returned without a response, with an explanatory notation.

a. The District reserves the right to assess the Contractor for the costs (on time-and-materials basis) incurred by the Architect, and any of its consultants, due to processing of such RFIs.

E. Content: Include identifiers necessary for tracking the status of each RFI, and information necessary to provide an actionable response.

1. Official Project name and number, and any additional required identifiers established in Contract Documents.
2. District's, Architect's, and Contractor's names.
3. Discrete and consecutive RFI number, and descriptive subject/title.
4. Issue date, and requested reply date.
5. Reference to particular Contract Document(s) requiring additional information/interpretation. Identify pertinent drawing and detail number and/or specification section number, title, and paragraph(s).
6. Annotations: Field dimensions and/or description of conditions which have engendered the request.
   a. Inability to determine from the Contract Documents the exact material, process, or system to be installed;
   b. Or when the elements of construction are required to occupy the same space (interference);
   c. Or when an item of Work is described differently at more than one place in the Contract Documents.
7. Contractor's suggested resolution: A written and/or a graphic solution, to scale, is required in cases where clarification of coordination issues is involved, for example; routing, clearances, and/or specific locations of work shown diagrammatically in Contract Documents. If applicable, state the likely impact of the suggested resolution on Contract Time or the Contract Sum.
   a. In all cases, furnish all information required for the Architect to analyze and/or understand the circumstances causing the RFI and prepare a clarification or direction as to proceed for RFIs issued to request clarification of issues related to:
      1) Means, methods, techniques and sequences of construction, for example
      2) Pipe and duct routing, clearances;
      3) Specific locations of Work shown diagrammatically;
      4) Apparent interferences and similar items.
      5) If information included with this type RFI by the Contractor is insufficient, the RFI will be returned unanswered.

F. Attachments: Include sketches, coordination drawings, descriptions, photos, submittals, and other information necessary to substantiate the reason for the request.

G. RFI Log: Prepare and maintain a tabular log of RFIs for the duration of the project.

1. Indicate current status of every RFI. Update log promptly and on a regular basis.
2. Note dates of when each request is made, and when a response is received.
3. Highlight items requiring priority or expedited response.

4. Highlight items for which a timely response has not been received to date.
5. Identify and include improper or frivolous RFIs.

H. Review Time: Architect will respond and return RFIs to Contractor within seven calendar days of receipt. For the purpose of establishing the start of the mandated response period, RFIs received after 12:00 noon will be considered as having been received on the following regular working day.

1. Response period may be shortened or lengthened for specific items, subject to mutual agreement, and recorded in a timely manner in progress meeting minutes.

I. Responses: Content of answered RFIs will not constitute in any manner a directive or authorization to perform extra work or delay the project. If in Contractor's belief it is likely to lead to a change to Contract Sum or Contract Time, promptly issue a notice to this effect, and follow up with an appropriate Change Order request to District.

1. Response may include a request for additional information, in which case the original RFI will be deemed as having been answered, and an amended one is to be issued forthwith. Identify the amended RFI with an R suffix to the original number.
2. Do not extend applicability of a response to specific item to encompass other similar conditions, unless specifically so noted in the response.
3. Upon receipt of a response, promptly review and distribute it to all affected parties, and update the RFI Log.
4. Notify Architect within seven calendar days if an additional or corrected response is required by submitting an amended version of the original RFI, identified as specified above.

3.09 SUBMITTAL SCHEDULE

A. Submit to Architect for review a schedule for submittals in tabular format.

1. Submit at the same time as the preliminary schedule.
   a. Submit initial Submittals Schedule within 14 days of date of Notice of Award of construction.
   b. After review and return by Architect, resubmit Submittals Schedule within 10 days and thereafter submit updated Submittals Schedules at each Construction Progress Meeting.
   c. Submit one copy each to Owner and Architect.
2. Coordinate with Contractor's construction schedule and schedule of values.
3. Format schedule to allow tracking of status of submittals throughout duration of construction.
   a. Prepare schedules in Gantt format using software at Contractor's option, providing clear indication of sequencing and scheduling of Work, for determination of "critical path" of construction progress.
      1) Submittals shall be connected to the related construction element by a graphically indicated critical path on the same page.
      2) Present schedules using opaque reproductions on substantial paper, with sheet size a multiple of 8-1/2 by 11 inches and large enough to clearly read characters.

4. Arrange information to include scheduled date for initial submittal, specification number and title, submittal category (for review or for information), description of item of work covered, and role and name of subcontractor.
5. Account for time required for preparation, review, manufacturing, fabrication and delivery when establishing submittal delivery and review deadline dates.
    a. For assemblies, equipment, systems comprised of multiple components and/or requiring detailed coordination with other work, allow for additional time to make corrections or revisions to initial submittals, and time for their review.
    b. Allow time for shipping and distribution to involved parties. Minimum 1 day, including those sent by electronic transmission.
6. Posting: Post one copy of most recent Submittals Schedule in Contractor's field office, readily available to District, District Representative, and Architect. Update bi-weekly with project schedule.
7. Archive: Preserve a minimum of two copies of all superseded schedules, with one copy available at field office for review by District or Architect.

3.10 SUBMITTALS FOR REVIEW

A. When the following are specified in individual sections, submit them for review:
    1. Product data.
    2. Shop drawings.
    3. Samples for selection.
    4. Samples for verification.
B. Submit to Architect for review for the limited purpose of checking for compliance with information given and the design concept expressed in Contract Documents.
C. Samples will be reviewed for aesthetic, color, or finish selection.
D. After review, provide copies and distribute in accordance with SUBMITTAL PROCEDURES article below and for record documents purposes described in Section 01 78 00 - Closeout Submittals.

3.11 SUBMITTALS FOR INFORMATION

A. When the following are specified in individual sections, submit them for information:
    1. Design data.
    2. Certificates.
    3. Test reports.
    4. Inspection reports.
    5. Manufacturer's instructions.
    6. Manufacturer's field reports.
    7. Other types indicated.
B. Submit for Architect's knowledge as contract administrator or for District.

3.12 SUBMITTALS FOR PROJECT CLOSEOUT

A. Submit Correction Punch List for Substantial Completion.Final Inspection.

B. Submit Final Correction Punch List for Final Inspection.

C. When the following are specified in individual sections, submit them at project closeout in compliance with requirements of Section 01 78 00 - Closeout Submittals:

1. Project record documents.
2. Operation and maintenance data.
   a. Include operation and maintenance data submittals in Submittals Schedule specified above.
   b. Provide space for review action stamps and, if required by governing authorities having jurisdiction, license seal of design Professional, if applicable.
3. Warranties.
4. Bonds.
5. Other types as indicated.

D. Submit for District's benefit during and after project completion.

3.13 NUMBER OF COPIES OF SUBMITTALS

A. Electronic Documents: Submit one electronic copy in PDF format with renderable text; an electronically-marked up file will be returned. Create PDFs at native size and right-side up; illegible files will be rejected.

B. Extra Copies at Project Closeout: See Section 01 78 00.

C. Samples: Submit the number specified in individual specification sections; one of which will be retained by Architect.

1. After review, produce duplicates.
2. Retained samples will not be returned to Contractor unless specifically so stated.
3. Quantity:
   a. Submit minimum of four (4) samples of each of color, texture and pattern.
   b. Submit one item only of actual assembly or product.
   c. Unless otherwise noted, full-size and complete samples will be returned and may be incorporated into field mock-ups and the Work.

3.14 SUBMITTAL PROCEDURES

A. General Requirements:

1. Use a separate transmittal for each item.
2. Submit separate packages of submittals for review and submittals for information, when included in the same specification section.
3. Transmit using approved form.
4. Sequentially identify each item. For revised submittals use original number and a sequential numerical suffix.

5. Identify: Project; Contractor; subcontractor or supplier; pertinent drawing and detail number; and specification section number and article/paragraph, as appropriate on each copy.
   a. For example:
      1) 09 21 16-1 - First submittal for Section 09 21 16 - Gypsum Board Assemblies.
      2) 09 21 16-2 - Second submittal for Section 09 21 16 - Gypsum Board Assemblies.
   b. Use same number for resubmittals as original submittal, followed by a letter indicating sequential resubmittal. For example:
      1) 09 21 16-2A - Resubmission of second submittal for Section 09 21 16 - Gypsum Board Assemblies.
      2) 09 21 16-2B - Second resubmission of second submittal for Section 09 21 16 - Gypsum Board Assemblies.
6. Apply Contractor's stamp, signed or initialed certifying that review, approval, verification of products required, field dimensions, adjacent construction work, and coordination of information is in accordance with the requirements of the work and Contract Documents.
   a. Submittals from sources other than the Contractor, or without Contractor's stamp will not be acknowledged, reviewed, or returned.
   b. Field measurements have been determined and verified.
   c. Conformance with requirements of Contract Drawings and Specifications is confirmed.
   d. Catalog numbers and similar data are correct.
   e. Work being performed by various subcontractors and trades is coordinated.
   f. Field construction criteria have been verified, including confirmation that information submitted has been coordinated with the work being performed by others for District and actual site conditions.
   g. All deviations from requirements of Drawings and Specifications have been identified and noted.
7. Deliver each submittal on date noted in submittal schedule, unless an earlier date has been agreed to by all affected parties, and is of the benefit to the project.
   a. Send submittals in electronic format via email to Architect.
   b. Upload submittals in electronic form to Electronic Document Submittal Service website.
8. Schedule submittals to expedite the Project, and coordinate submission of related items.
   a. For each submittal for review, allow 15 days excluding delivery time to and from the Contractor.
   b. For sequential reviews involving Architect's consultants, District, or another affected party, allow an additional 7 days.
   c. For sequential reviews involving approval from authorities having jurisdiction (AHJ), in addition to Architect's approval, allow an additional 30 days.

9. Identify variations from Contract Documents and product or system limitations that may be detrimental to successful performance of the completed work.
    a. Changes in the Work shall not be authorized by submittals review actions.
    b. No review action, implicit or explicit, shall be interpreted to authorized changes in the Work.
    c. Changes shall only be authorized by separate written Contract Change Order or Construction Change Directive, in accordance with the Conditions of the Contract and Section 01 20 00 - Price and Payment Procedures.
10. Provide space for Contractor and Architect review stamps.
11. When revised for resubmission, identify all changes made since previous submission.
12. Distribute reviewed submittals. Instruct parties to promptly report inability to comply with requirements.
13. Incomplete submittals will not be reviewed, unless they are partial submittals for distinct portion(s) of the work, and have received prior approval for their use.
14. Submittals not requested will be recognized, but will be returned without comment,

B. Product Data Procedures:
    1. Submit only information required by individual specification sections.
    2. Collect required information into a single submittal.
    3. Submit concurrently with related shop drawing submittal.
    4. Do not submit (Material) Safety Data Sheets for materials or products.

C. Shop Drawing Procedures:
    1. Prepare accurate, drawn-to-scale, original shop drawing documentation by interpreting Contract Documents and coordinating related work.
    2. Use of reproductions of Contract Documents in digital data form to create shop drawings is only permitted as defined in Division 01 and individual product sections.
    3. Coordination: Show all field dimensions and relationships to adjacent or critical features of Work.
    4. Generic, non-project-specific information submitted as shop drawings do not meet the requirements for shop drawings.

D. Samples Procedures:
    1. Transmit related items together as single package.
    2. Samples will be reviewed for aesthetic, color, or finish selection.
    3. Identify each item to allow review for applicability in relation to shop drawings showing installation locations.
    4. Color Selection Samples: Architect will review and select colors for Project only after all colors are received, so that colors may be properly coordinated.
    5. Copies: Submit actual samples. Photographic or printed reproductions will not be accepted.

6. Review of Field Samples: Review by Architect of field samples will be made for the following example products, as applicable, if not otherwise required and if requested by Contractor.
    a. Concrete wall finishes and detailing (edges, corners and reveals).
    b. Concrete paving colors and textures.
    c. Gypsum board textures and finishes.
    d. Field-applied paint colors and finishes.

3.15 SUBMITTAL REVIEW

A. Submittals for Review: Architect will review each submittal, and approve, or take other appropriate action.

B. Submittals for Information: Architect will acknowledge receipt and review. See below for actions to be taken.

C. Architect's actions will be reflected by marking each returned submittal using virtual stamp on electronic submittals.
    1. Notations may be made directly on submitted items and/or listed on appended Submittal Review cover sheet.

D. Architect's and consultants' actions on items submitted for review:
    1. Authorizing purchasing, fabrication, delivery, and installation:
        a. "Approved", "Reviewed", or language with same legal meaning.
        b. "Approved as Noted, Resubmission not required", or language with same legal meaning.
            1) At Contractor's option, submit corrected item, with review notations acknowledged and incorporated.
        c. "Approved as Noted, Resubmit for Record", "Reviewed as Noted, Resubmit for Record", or language with same legal meaning.
            1) Resubmit corrected item, with review notations acknowledged and incorporated. Resubmit separately, or as part of project record documents.
            2) Non-responsive resubmittals may be rejected.
    2. Not Authorizing fabrication, delivery, and installation:
        a. "Revise and Resubmit".
            1) Resubmit revised item, with review notations acknowledged and incorporated.
            2) Non-responsive resubmittals may be rejected.
        b. "Rejected".
            1) Submit item complying with requirements of Contract Documents.

E. Architect's and consultants' actions on items submitted for information:
    1. Items for which no action was taken:
        a. "Received" - to notify the Contractor that the submittal has been received for record only.
    2. Items for which action was taken:

a. "Reviewed" - no further action is required from Contractor.

END OF SECTION

SECTION 01 30 00.01
REQUEST FOR INTERPRETATION (INFORMATION)

RFI NUMBER: _____ **DATE:** _____

PROJECT NAME: NARANCA ES RELOCATABLE CLASSROOM BUILDINGS

PROJECT NO.: 1-16-21

TO: RUHNAU CLARKE ARCHITECTS

3775 Tenth Street, Riverside CA 92501 - 5751 Palmer Way, Suite C, Carlsbad, CA 92010

Attention: _____

Contractor: _____

Address: _____

BRIEF SUMMARY OF RFI:

Drawing No. _____ Detail No. _____

Specification Section No. __ __ __ Title _____

Article / Paragraph _____ Page _____

DETAILS OF THIS RFI:

SUGGESTED SOLUTION:

Response required by: _____ (min. 3 full days)

Submitted By: _____ Organization: _____

RESPONSE:

Attachments:

Response By: _____ Date: _____

Organization: _____

Copies:

	File		District		Structural
	Mechanical		Plumbing		Electrical
	Fire Sprinkler		Food Service		Theater
	Civil		Landscape		other consultants

END OF RFI

RUHNAU CLARKE ARCHITECTS

SUBMITTAL / SHOP DRAWING TRANSMITTAL

To:	Ruhnau Clarke Architects	Contractor's Submittal No.	
Attn:	**Construction Dept.**		
Contractor:		Project Name:	
Street:		RCA's Project No.	
City, State:		Subcontractor:	

CONTRACTOR TO FILL OUT THE FOLLOWING COVERING ONE COMPLETE SECTION OF THE SPECIFICATIONS ONLY:

Specification Section #:	Section Title:

☐	Initial Submittal	Scheduled Date of Submittal	
☐	1st Resubmittal	Scheduled Date of Submittal Return	
☐	___ Resubmittal	Date Sent	
☐	Submittal was a previously approved substitution.	Number of Copies	
	Approved Substitution Request Transmittal Form is enclosed.	Number of Samples	

CONTRACTOR COMPLETE EITHER (A) OR (B) FOLLOWING, CHECK ONE:	CONSTRUCTION MANAGERS CERTIFICATION
(A) WE HAVE VERIFIED THAT THE MATERIAL OR EQUIPMENT CONTAINED IN THIS SUBMITTAL MEETS ALL THE REQUIREMENTS SPECIFIED OR SHOWN (NO EXCEPTIONS). ❑	THIS IS TO CERTIFY THAT THE CONSTRUCTION MANAGER IS REASONABLY CERTAIN THAT THE MATERIAL SPECIFIED IN THIS SUBMITTAL MEETS THE REQUIREMENTS OF THE CONTRACT DOCUMENTS, AND THE SUBMITTAL IS COMPLETE PER THE CONTRACT DOCUMENTS. SIGNATURE: _____
(B) WE HAVE VERIFIED THAT THE MATERIAL OR EQUIPMENT CONTAINED IN THIS SUBMITTAL MEETS ALL THE REQUIREMENTS SPECIFIED OR SHOWN, EXCEPT FOR THE FOLLOWING DEVIATIONS (LIST DEVIATIONS ON AN ATTACHED SHEET OR INDICATE DEVIATIONS CLEARLY ON SHOP DRAWINGS OR SUBMITTALS). ❑	CONTRACTORS CERTIFICATION THIS IS TO CERTIFY THAT THE CONTRACTOR IS REASONABLY CERTAIN THAT THE MATERIAL SPECIFIED IN THIS SUBMITTAL MEETS THE REQUIREMENTS OF THE CONTRACT DOCUMENTS. SIGNATURE: _____

ARCHITECT'S USE ONLY BELOW THIS LINE.

Action:

☐ No Exception Taken ☐ Make Corrections Noted ☐ Rejected/Resubmit ☐ Revise and Resubmit

Comments:

Date Received By RRC:

Date Sent to Consultant:

Structural _____

Mechanical _____

Electrical _____

Other _____

Date Received From:

Consultant _____

No. of Copies Received _____

Final Distribution: Contractor _____ Inspector _____ District/P.M. _____ Architect ____

Final Distribution Date: _____

SECTION 01 35 50
REQUESTS FOR ELECTRONIC FILES

PART 1 - GENERAL

1.01 SECTION INCLUDES

A. Requirements to request electronic construction document files from Architect.

B. Hold Harmless Agreement form.

1.02 RELATED SECTIONS

A. Section 01 30 00 - Administrative Requirements: Shop Drawings, Product Data and Samples.

B. Section 01 70 00 - Execution and Closeout Requirements.

C. Divisions 31 through 33 - Site Work.

1.03 REQUIREMENTS

A. Electronic files have legal ramifications as information therein can be modified.

B. In order to receive this electronic information, the following Hold Harmless Agreement form must be executed in its entirety, including signature by a company officer.

C. Costs for processing and handling electronic files, however limited, will be $600.00

PART 2 - PRODUCTS - (NOT APPLICABLE TO THIS SECTION.)

PART 3 - EXECUTION

3.01 ELECTRONIC FILE TRANSFER PROCEDURE

A. Submit a check in the amount of $600.00 per delivery request along with a list of the requested sheet numbers and an acknowledged copy of this waiver to the office of the Architect, Ruhnau Clarke Architects, 3775 Tenth Street, Riverside CA 92501 - 5751 Palmer Way, Suite C, Carlsbad, CA 92010.

B. In order to expedite the transfer, upon receipt of a PDF copy of this acknowledgement, the requested CAD/Revit/BIM files will be sent in the form of a compact disc, DVD, or thumb drive to the recipient, as requested, by UPS, similar delivery service, or other method of electronic transfer after payment is received.

C. It is expressly understood that any transfer is done as a courtesy and can be revoked at any time by the Architect.

Agreement is on next page

HOLD HARMLESS AGREEMENT

ARCHITECT'S PROJECT: NARANCA ES RELOCATABLE CLASSROOM BUILDINGS

ARCHITECT'S PROJECT NUMBER: 1-16-21

We, _____, understand that we may be receiving electronic media containing design information, not necessarily intended for construction. We agree to hold Ruhnau Clarke Architects harmless for any defects in this data. We agree that it shall be our responsibility to reconcile this electronic data with the paper plans, and that only the paper plans shall be regarded as legal documents for the referenced project.

Further, the Contractor acknowledges that the Architect's reports, drawings, specifications, field data, field notes, laboratory test data, calculations, estimates and other similar documents are instruments of professional service, not products. In accepting and utilizing any drawings or other data on any form of electronic media generated and provided by the Design Professionals, the Parties listed above covenant and agree that all such drawings and data are instruments of service of the Design Professionals, who shall be deemed the author of the drawings and data, and shall retain all common law, statutory law and other rights, including copyrights.

The Parties agree that in accepting and utilizing any drawings and other data, that the Design Professionals waive all responsibility for any subsequent use of these data, the accuracy of dimensions, and the interpretation of information contained herein.

The Parties further agree not to use these drawings and data, in whole or in part, for any purpose or project other than the project which is the subject of this Agreement. The Parties further agree to waive all claims against the Design Professionals resulting in any way from any unauthorized changes of the drawings and data or any other use other than for the project which is the subject of this Agreement.

The Contractor shall indemnify, defend and hold harmless the Design Professionals and its subconsultants and their officers, agents, employees from any claims, damages, losses, liabilities or expenses (including attorneys' fees) arising out of use of such documents without Consultant's prior written authorization.

Under no circumstances shall transfer of the drawings and other data be deemed a sale by the Design Professionals, and the Design Professionals make no warranties, either express or implied of the merchantability and fitness of the data for any particular purpose.

Sheet numbers or discipline requested: _____

_____

Acknowledged by: Company Name _____

_____ _____ _____

Signature of Company Officer Print or Type Name Date

Street Address _____

City, State, Zip Code _____

E-mail Address _____

END OF SECTION

SECTION 01 35 53
SECURITY PROCEDURES

PART 1 GENERAL

1.01 SECTION INCLUDES

A. Security measures including formal security program, entry control, personnel identification, and miscellaneous restrictions.

1.02 RELATED REQUIREMENTS

A. Section 01 10 00 - Summary: use of premises and occupancy.

B. Section 01 50 00 - Temporary Facilities and Controls: Temporary lighting.

1.03 SECURITY PROGRAM

A. Protect Work , existing premises and District's operations from theft, vandalism, and unauthorized entry.

B. Initiate program in coordination with District's existing security system at project mobilization.

C. Maintain program throughout construction period until District acceptance precludes the need for Contractor security.

1.04 ENTRY CONTROL

A. Restrict entrance of persons and vehicles into Project site and existing facilities.

B. Allow entrance only to authorized persons with proper identification.

C. Maintain log of workers and visitors, make available to District on request.

D. District will control entrance of persons and vehicles related to District's operations.

E. Contractor shall control entrance of persons and vehicles related to District's operations.

F. Coordinate access of District's personnel to site in coordination with District's security forces.

1.05 PERSONNEL IDENTIFICATION

A. Shall be worn by Contractor’s superintendent and all sub contractors

B. Provide identification badge to each person authorized to enter premises.

C. Badge To Include: Personal photograph, name, assigned number , expiration date and employer.

D. Maintain a list of accredited persons, submit copy to District on request.

E. Special badges shall be issued to construction personnel when term of construction exceeds six months.

F. Require return of badges at expiration of their employment on the Work.

1.06 RESTRICTIONS

A. Do not allow cameras on site or photographs taken except by written approval of District.

PART 2 PRODUCTS - NOT USED

PART 3 EXECUTION - NOT USED

END OF SECTION

SECTION 01 40 00
QUALITY REQUIREMENTS

PART 1 GENERAL

1.01 SECTION INCLUDES

A. Contractor Quality assurance submittals.

B. Quality assurance.

C. References and standards.

D. Inspection agencies and services.

E. Contractor's construction-related professional design services.

F. Contractor's design-related professional design services.

G. Control of installation.

H. Mock-ups.

I. Tolerances.

J. Manufacturers' field services.

K. Defect Assessment.

1.02 RELATED REQUIREMENTS

A. Section 01 30 00 - Administrative Requirements: Submittal procedures.

B. Section 01 41 00 - Regulatory Requirements: Compliance with applicable codes, ordinances and standards.

C. Section 01 45 33 - Code-Required Special Inspections and Procedures: Testing laboratory services and inspections required by Division of the State Architect (DSA), during the course of construction.

D. Section 01 60 00 - Product Requirements: Requirements for material and product quality.

1. Product options, substitutions, transportation and handling requirements, storage and protection requirements, and system completeness requirements.

1.03 REFERENCE STANDARDS

A. ASTM C1021 - Standard Practice for Laboratories Engaged in Testing of Building Sealants.

B. ASTM C1077 - Standard Practice for Agencies Testing Concrete and Concrete Aggregates for Use in Construction and Criteria for Testing Agency Evaluation.

C. ASTM C1093 - Standard Practice for Accreditation of Testing Agencies for Masonry.

D. ASTM D3740 - Standard Practice for Minimum Requirements for Agencies Engaged in Testing and/or Inspection of Soil and Rock as Used in Engineering Design and Construction.

E. ASTM E329 - Standard Specification for Agencies Engaged in Construction Inspection, Testing, or Special Inspection.

F. ASTM E543 - Standard Specification for Agencies Performing Nondestructive Testing.

G. ASTM E699 - Standard Specification for Agencies Involved in Testing, Quality Assurance, and Evaluating of Manufactured Building Components.

H. IAS AC89 - Accreditation Criteria for Testing Laboratories.

1.04 DEFINITIONS

A. Contractor's Quality Control Plan: Contractor's management plan for executing the Contract for Construction.

1.05 CONTRACTOR'S CONSTRUCTION-RELATED PROFESSIONAL DESIGN SERVICES

A. Coordination: Contractor's professional design services are subject to requirements of project's Conditions for Construction Contract.

B. Provide such engineering design services as may be necessary to plan and safely conduct certain construction operations, pertaining to, but not limited to the following:

1. Temporary sheeting, shoring, or supports.
2. Temporary scaffolding.
3. Temporary bracing.
4. Temporary falsework for support of spanning or arched structures.
5. Temporary stairs or steps required for construction access only.
6. Temporary hoist(s) and rigging.
7. Investigation of soil conditions to support construction equipment.

1.06 CONTRACTOR'S DESIGN-RELATED PROFESSIONAL DESIGN SERVICES

A. Coordination: Contractor's professional design services are subject to requirements of project's Conditions for Construction Contract.

B. Base design on performance and/or design criteria indicated in individual specification sections.

C. Scope of Contractor's Professional Design Services: Provide for the following items of work:

1. Structural Design of Formwork: As described in Section 03 10 00 - Concrete Forming and Accessories.
2. Concrete Mix Design: As described in Section 03 30 00 - Cast-in-Place Concrete. No specific designer qualifications are required.

1.07 SUBMITTALS

A. See Section 01 30 00 - Administrative Requirements, for submittal procedures.

B. Designer's Qualification Statement: Submit for Architect's knowledge as contract administrator, or for District's information.

1. Include information for each individual professional responsible for producing, or supervising production of, design-related professional services provided by Contractor.
   a. Full name.
   b. Professional licensure information.
   c. Statement addressing extent and depth of experience specifically relevant to design of items assigned to Contractor.

C. Quality Control Submittals Schedule

1. Schedule Format: Include quality control submittals on Submittals Schedule specified in accordance with General Conditions
2. Schedule Content: List all tests, inspections and reports specified to be submitted, indicating submittal number, submittal type (field test, field inspection, fabrication inspection, etcetera), scheduled date of quality control activity and date report should be made.

D. Design Data: Submit for Architect's knowledge as contract administrator for the limited purpose of assessing compliance with information given and the design concept expressed in the Contract Documents, or for District's information.

1. Include calculations that have been used to demonstrate compliance to performance and regulatory criteria provided, and to determine design solutions.
2. Include required product data and shop drawings.
3. Include a statement or certification attesting that design data complies with criteria indicated, such as building codes, loads, functional, and similar engineering requirements.
4. Include signature and seal of design professional responsible for allocated design services on calculations and drawings.

E. Test Reports: After each test/inspection, promptly submit two copies of report to Architect, Project Inspector, and to Contractor.

1. Include:
   a. Date issued.
   b. Project title and number.
   c. Name of inspector.
   d. Date and time of sampling or inspection.
   e. Identification of product and specifications section.
   f. Location in the Project.
   g. Type of test/inspection.
   h. Date of test/inspection.
   i. Results of test/inspection.
   j. Compliance with Contract Documents.
   k. When requested by Architect, provide interpretation of results.
2. Test report submittals are for Architect's knowledge as contract administrator for the limited purpose of assessing compliance with information given and the design concept expressed in the Contract Documents, or for District's information.

F. Certificates: When specified in individual specification sections, submit certification by the manufacturer and Contractor or installation/application subcontractor to Architect, in quantities specified for Product Data.

1. Indicate material or product complies with or exceeds specified requirements. Submit supporting reference data, affidavits, and certifications as appropriate.

2. Certificates may be recent or previous test results on material or product, but must be acceptable to Architect.

G. Manufacturer's Instructions: When specified in individual specification sections, submit printed instructions for delivery, storage, assembly, installation, start-up, adjusting, and finishing, for the District's information. Indicate special procedures, perimeter conditions requiring special attention, and special environmental criteria required for application or installation.

H. Manufacturer's Field Reports: Submit reports for Architect's benefit as contract administrator or for District.

1. Submit report in duplicate within 30 days of observation to Architect for information.
2. Submit for information for the limited purpose of assessing compliance with information given and the design concept expressed in the Contract Documents.

I. Erection Drawings: Submit drawings for Architect's benefit as contract administrator or for District.

1. Submit for information for the limited purpose of assessing compliance with information given and the design concept expressed in the Contract Documents.
2. Data indicating inappropriate or unacceptable Work may be subject to action by Architect or District.

1.08 QUALITY ASSURANCE

A. Testing Agency Qualifications:

1. Prior to start of work, submit agency name, address, and telephone number, and names of full time registered Engineer and responsible officer.
2. Submit copy of report of laboratory facilities inspection made by NIST Construction Materials Reference Laboratory during most recent inspection, with memorandum of remedies of any deficiencies reported by the inspection.
3. Qualification Statement: Provide documentation showing testing laboratory is approved by Division of the State Architect.
4. Qualification Statement: Provide documentation showing testing laboratory is accredited under IAS AC89.

B. Designer Qualifications: Where professional engineering design services and design data submittals are specifically required of Contractor by Contract Documents, provide services of a Professional Engineer experienced in design of this type of work and licensed in California.

C. Contractor's Quality Control (CQC) Plan:

1. Prior to start of work, submit a comprehensive plan describing how contract deliverables will be produced. Tailor CQC plan to specific requirements of the project. Include the following information:
   a. Management Structure: Identify personnel responsible for quality. Include a chart showing lines of authority.
      1) Include qualifications (in resume form), duties, responsibilities of each person assigned to CQC function.
   b. Management Approach: Define, describe, and include in the plan specific methodologies used in executing the work.

1) Management and control of documents and records relating to quality.
2) Communications.
3) Coordination procedures.
4) Resource management.
5) Process control.
6) Inspection and testing procedures and scheduling.
7) Control of noncomplying work.
8) Tracking deficiencies from identification, through acceptable corrective action, and verification.
9) Control of testing and measuring equipment.
10) Project materials certification.
11) Managerial continuity and flexibility.

c. District will not make a separate payment for providing and maintaining a Quality Control Plan. Include associated costs in Bid price.

d. Acceptance of the plan is required prior to start of construction activities not including mobilization work. District's acceptance of the plan will be conditional and predicated on continuing satisfactory adherence to the plan. District reserves the right to require Contractor to make changes to the plan and operations, including removal of personnel, as necessary, to obtain specified quality of work results.

D. Quality-Control Personnel Qualifications. Engage a person with requisite training and experience to implement and manage quality assurance (QA) and quality control (QC) for the project.

1.09 REFERENCES AND STANDARDS

A. For products and workmanship specified by reference to a document or documents not included in the Project Manual, also referred to as reference standards, comply with requirements of the standard, except when more rigid requirements are specified or are required by applicable codes.

B. Comply with reference standard of date of issue current on date of Contract Documents, except where a specific date is established by applicable code.

C. Obtain copies of standards where required by product specification sections.

D. Maintain copy at project site during submittals, planning, and progress of the specific work, until Substantial Completion.

E. Should specified reference standards conflict with Contract Documents, request clarification from Architect before proceeding.

F. Neither the contractual relationships, duties, or responsibilities of the parties in Contract nor those of Architect shall be altered from Contract Documents by mention or inference otherwise in any reference document.

1.10 REGULATORY REQUIREMENTS FOR TESTING AND INSPECTION

A. Inspections, testing and approvals as required by authorities having jurisdiction. Refer to Section 01 41 00 - Regulatory Requirements and Section 01 45 33 - Code-Required Special Inspections and Procedures.

B. Standards and Code Compliance and Manufacturer's Instructions and Recommendations: Unless more stringent requirements are indicated or specified, comply with manufacturer's instructions and recommendations, reference standards and building code research report requirements in preparing, fabricating, erecting, installing, applying, connecting and finishing Work.

C. Deviations from Standards and Code Compliance and Manufacturer's Instructions and Recommendations: Document and explain all deviations from reference standards and building code research report requirements and manufacturer's product installation instructions and recommendations, including acknowledgement by the manufacturer that such deviations are acceptable and appropriate for the Project.

1.11 TESTING AND INSPECTION AGENCIES AND SERVICES

A. District will employ and pay for services of an independent testing agency approved by DSA to perform specified testing.

B. As indicated in individual specification sections, District or Contractor shall employ and pay for services of an independent testing agency to perform specified testing.

C. Employment of agency in no way relieves Contractor of obligation to perform Work in accordance with requirements of Contract Documents.

D. Contractor Employed Agency:

1. Testing agency: Comply with requirements of ASTM E329, ASTM E543, ASTM E699, ASTM C1021, ASTM C1077, ASTM C1093, ASTM D3740, and DSA.
2. Laboratory Qualifications: Accredited by IAS according to IAS AC89.
3. Laboratory: Authorized to operate in California.
4. Laboratory Staff: Maintain a full time registered Engineer on staff to review services.
5. Testing Equipment: Calibrated at reasonable intervals either by NIST or using an NIST established Measurement Assurance Program, under a laboratory measurement quality assurance program.

PART 2 PRODUCTS - NOT USED

PART 3 EXECUTION

3.01 CONTRACTOR'S QUALITY ASSURANCE

A. Quality Requirements: Work shall be accomplished in accordance with quality requirements of the Drawings and Specifications, including, by reference, all Codes, laws, rules, regulations and standards. When no quality basis is prescribed, the quality shall be in accordance with the best accepted practices of the construction industry for the locale of the Project, for projects of this type.

B. Quality Control Personnel: Contractor shall employ and assign knowledgeable and skilled personnel as necessary to perform quality control functions to ensure that the Work is provided as required.

3.02 CONTROL OF INSTALLATION

A. Quality of Products: Unless otherwise indicated or specified, all products shall be new, free of defects and fit for the intended use.

B. Monitor quality control over suppliers, manufacturers, products, services, site conditions, and workmanship, to produce work of specified quality.

C. Comply with manufacturers' instructions, including each step in sequence.

D. Should manufacturers' instructions conflict with Contract Documents, request clarification from Architect before proceeding.

E. Comply with specified standards as minimum quality for the work except where more stringent tolerances, codes, or specified requirements indicate higher standards or more precise workmanship.

F. Have work performed by persons qualified to produce required and specified quality.

G. Verify that field measurements are as indicated on shop drawings or as instructed by the manufacturer.

H. Secure products in place with positive anchorage devices designed and sized to withstand stresses, vibration, physical distortion, and disfigurement.

I. Quality of Installation: All Work shall be produced plumb, level, square and true, or true to indicated angle, and with proper alignment and relationship between the various elements.

J. Protection of Existing and Completed Work: Take all measures necessary to preserve and protect existing and completed Work free from damage, deterioration, soiling and staining, until Acceptance by the District.

K. Verification of Quality: Work shall be subject to verification of quality by District, or Architect in accordance with provisions of the General Conditions of the Contract.

1. Contractor shall cooperate by making Work available for inspection by District, Architect or their designated representatives.
2. Such verification may include mill, plant, shop, or field inspection as required.
3. Provide access to all parts of the Work, including plants where materials or equipment are manufactured or fabricated.
4. Provide all information and assistance as required, including that by and from subcontractors, installers, fabricators, materials suppliers and manufacturers, for verification of quality by District, or Architect.
5. Contract modifications, if any, resulting from such verification activities shall be governed by applicable provisions in the General Conditions.

3.03 TOLERANCES

A. Monitor fabrication and installation tolerance control of products to produce acceptable Work. Do not permit tolerances to accumulate.

B. Comply with manufacturers' tolerances. Should manufacturers' tolerances conflict with Contract Documents, request clarification from Architect before proceeding.

C. Adjust products to appropriate dimensions; position before securing products in place.

3.04 TESTING AND INSPECTION

A. See individual specification sections for testing required.

B. Testing Agency Duties:

1. Test samples of mixes submitted by Contractor.
2. Provide qualified personnel at site. Cooperate with Architect and Contractor in performance of services.
3. Perform specified sampling and testing of products in accordance with specified standards.
4. Ascertain compliance of materials and mixes with requirements of Contract Documents.
5. Promptly notify Architect and Contractor of observed irregularities or non-compliance of Work or products.
6. Perform additional tests and inspections required by Architect.
7. Submit reports of all tests/inspections specified.

C. Limits on Testing/Inspection Agency Authority:

1. Agency may not release, revoke, alter, or enlarge on requirements of Contract Documents.
2. Agency may not approve or accept any portion of the Work.
3. Agency may not assume any duties of Contractor.
4. Agency has no authority to stop the Work.

D. Contractor Responsibilities:

1. Deliver to agency at designated location, adequate samples of materials proposed to be used that require testing, along with proposed mix designs.
2. Cooperate with laboratory personnel, and provide access to the Work and to manufacturers' facilities.
3. Provide incidental labor and facilities:
   a. To provide access to Work to be tested/inspected.
   b. To facilitate tests/inspections.
   c. To provide for storage and curing of test samples.
4. Notify Architect and laboratory 24 hours prior to expected time for operations requiring testing/inspection services.
5. Employ services of an independent qualified testing laboratory and pay for additional samples, tests, and inspections required by Contractor beyond specified requirements.
6. Arrange with District's agency and pay for additional samples, tests, and inspections required by Contractor beyond specified requirements.
7. Inspections and Tests by Authorities Having Jurisdiction:
   a. Contractor shall cause all tests and inspections to be made for Work under this Contract, as required by Building Departments, Department of Public Works, Fire Department, Health Department and similar agencies having jurisdiction.

b. Excepted as specifically noted, scheduling, conducting and paying for such inspections shall be solely the Contractor's responsibility.

8. Inspections and Tests by Serving Utilities:

a. Contractor shall cause all tests and inspections required by serving utilities to be made for Work under this Contract.

b. Scheduling, conducting and paying for such inspections shall be solely the Contractor's responsibility.

E. Re-testing required because of non-compliance with specified requirements shall be performed by the same agency on instructions by Architect.

F. Costs of re-testing required because of non-compliance with specified requirements are to be reimbursed to the District by the Contractor through a deductive change order, CAC 4-335(b).

3.05 MANUFACTURERS' FIELD SERVICES

A. When specified in individual specification sections, require material or product suppliers or manufacturers to provide qualified staff personnel to observe site conditions, conditions of surfaces and installation, quality of workmanship, start-up of equipment, test, adjust, and balance equipment as applicable, and to initiate instructions when necessary.

B. Submit qualifications of observer to Architect 30 days in advance of required observations.

1. Observer subject to approval of Architect.

2. Observer subject to approval of District.

C. Report observations and site decisions or instructions given to applicators or installers that are supplemental or contrary to manufacturers' written instructions.

3.06 FIELD QUALITY CONTROL SUBMITTALS

A. Administration: Make all submittals to the Architect, unless otherwise directed.

B. Submittal Identification: Identify each submittal by Specification Section number followed by a number indicating sequential submittal for that Section. Coordinate submittal numbers with submittals specified in Section 01 30 00 - Administrative Requirements.

1. Resubmittals shall use same number as original submittal, followed by a letter indicating sequential resubmittal.

03 30 00 - 1	First submittal for Section 03 30 00 - Cast in Place Concrete.
03 30 00 - 2	Second submittal for Section 03 30 00 - Cast in Place Concrete.
03 30 00 - 2A	Resubmittal of second submittal for Section 03 30 00 - Cast in Place Concrete.
03 30 00 - 2B	Second resubmittal of second submittal for Section 03 30 00 - Cast in Place Concrete.

C. Project Identification: Title each submittal with Project name, submittal date and Architect's Project number.

D. Copies: Provide PDF copies electronically transmitted or submit 6 copies, minimum, of reports of quality control reports on dry-process xerographic copies only.

E. Contractor's Review:
   1. Submittals shall be made in accordance with requirements specified herein and in individual Sections.
   2. Indicate clearly on each submittal the specified or referenced values for each quality control activity and the values obtained.
   3. Note clearly and sign each submittal certifying that reported quality control activity "Conforms" or "Does Not Conform".

F. Changes and Deviations:
   1. Identify all deviations from requirements of Drawings and Specifications.
   2. Changes in the Work shall not be authorized by submittals review actions.
   3. No review action, implicit or explicit, shall be interpreted to authorized changes in the Work.
   4. Changes shall only be authorized by separate written Change Order or Construction Change Directive, in accordance with the General Conditions and 01 20 00 - Price and Payment Procedures.

G. Record Submittals: When record submittals are specified, submit three copies or sets only. Record submittals will not be reviewed but will be retained for historical and maintenance purposes.

H. Unsolicited Submittals: Unsolicited submittals will be returned unreviewed.

3.07 ARCHITECT'S REVIEW

A. General:
   1. Submitted Report review by Architect and Architect's consultants shall be only for general conformance with the design concept and requirements based on the information presented.
   2. Neither Architect nor Architect's consultants shall verify submitted quality control data.

B. Contract Requirements:
   1. Review by Architect and Architect's consultants shall not relieve the Contractor from compliance with requirements of the Drawings and Specifications.
   2. Changes shall only be authorized by separate written Change Order or Construction Change Directive, in accordance with the General Conditions and 01 20 00 - Price and Payment Procedures.

C. Observations by Architect and Architect's Consultants: Periodic and occasional observations of Work in progress will be made by Architect and Architect's consultants as deemed necessary to review progress of Work and general conformance with design intent.

3.08 DEFECT ASSESSMENT

A. Replace Work or portions of the Work not conforming to specified requirements, at no change in Contract Sum or Contract Time.

B. If, in the opinion of Architect, it is not practical to remove and replace the work, Architect will direct an appropriate remedy or adjust payment.

C. Architect's Acceptance and Rejection of Work: Architect reserves the right to reject all Work not in conformance to the requirements of the Drawings and Specifications.

D. Acceptance of Non-Conforming Work: Acceptance of non-conforming Work, without specific written acknowledgement and approval of the District, shall not relieve the Contractor of the obligation to correct such Work.

   1. Acceptance of structurally related non-conforming work shall be submitted to DSA for review and approval.

E. Contract Adjustment for Non-conforming Work:

   1. Should Architect or District determine that it is not feasible or in District's interest to require non-conforming Work to be repaired or replaced, an equitable reduction in Contract Sum shall be made by agreement between District and Contractor.
   2. If equitable amount cannot be agreed upon, a Construction Change Directive will be issued and the amount in dispute resolved in accordance with applicable provisions of the General Conditions.

F. Non-Responsibility for Non-Conforming Work: Architect and Architect's consultants disclaim any and all responsibility for Work produced not in conformance with the Drawings and Specifications.

END OF SECTION

SECTION 01 41 00
REGULATORY REQUIREMENTS

PART 1 GENERAL

1.01 AUTHORITY AND PRECEDENCE OF CODES, ORDINANCES AND STANDARDS

A. Authority: All codes, ordinances and standards referenced in the Drawings and Specifications shall have the full force and effect as though printed in their entirety in the Specifications.

B. Precedence:

1. Where specified requirements differ from the requirements of applicable codes, ordinances and standards, the more stringent requirements take precedence.
2. Where the Drawings or Specifications require or describe products or execution of better quality, higher standard or greater size than required by applicable codes, ordinances and standards, the Drawings and Specifications take precedence so long as such increase is legal.
3. Where no requirements are identified in the Drawings or Specifications, comply with all requirements of applicable codes, ordinances and standards of authorities having jurisdiction.

C. Applicable Codes, Laws and Ordinances: Refer also to Section 01 10 00 - Summary, regarding permits and licenses.

1. Performance of the Work is be governed by all applicable laws, ordinances, rules and regulations of Federal, State and local governmental agencies and jurisdictions having authority over the Project, including accessibility requirements.
2. Performance of the Work shall be accomplished in conformance with all rules and regulations of public utilities, utility districts and other agencies serving the development.
3. Where such laws, ordinances, rules and regulations require more care or greater time to accomplish Work, or require better quality, higher standards or greater size of products, Work shall be accomplished in conformance to such requirements with no change to the Contract Time and Contract Sum, except where changes in laws, ordinances, rules and regulations occur subsequent to the execution date of the Agreement.

D. Applicable Building Codes: References on the Drawings or in the Specifications to "code" or "building code" not otherwise identified shall mean the codes specified below, together with all additions, amendments, changes, and interpretations adopted by code authorities of the jurisdiction having authority over the Project.

E. Performance of the Work shall meet or exceed the minimum regulatory requirements applicable to this project are summarized in this section, as adopted by Division of the State Architect:

1. Part 1, Title 24 CCR - 2025 California Administrative Code.
2. Part 2, Title 24 CCR - 2025 California Building Code (CBC); Volumes 1 and 2.
   a. Effective dates of referenced standards are according to Chapter 35.
3. Part 3, Title 24 CCR - 2025 California Electrical Code.

4. Part 4, Title 24 CCR - 2025 California Mechanical Code (CMC).
5. Part 5, Title 24 CCR - 2025 California Plumbing Code (CPC).
6. Part 6, Title 24 CCR - 2025 California Energy Code.
7. Part 9, Title 24 CCR - 2025 California Fire Code (CFC).
8. Part 10, Title 24 CCR - 2025 California Existing Buildings Code.
9. Part 11, Title 24 CCR - 2025 California Green Building Standards Code (CalGreen).
    a. California Green Building Standards Code, Title 24, Part 11 (CALGreen) Section 5.409 Life Cycle Assessment.
        1) GWP Analysis report and Worksheet WS-4.
        2) Table 5.409.3 Product GWP Limits
10. Part 12, Title 24 CCR - 2025 California Referenced Standards Code.
11. Title 19 CCR, Public Safety

F. Maintain on site during construction, a copy of California Codes and Regulations; Title 24, California Building Code, Parts 1 through 5.

1.02 SUMMARY OF REFERENCE STANDARDS

A. Regulatory requirements applicable to this project are the following:
    1. For a list of applicable standards, including California amendments to the NFPA Standards, refer to CBC Chapter 35 and CFC Chapter 80.

B. California Referenced Standards Code: Chapter 12-7-4 Fire Resistive Standards, for fire rated doors.

C. National Fire Protection Association (NFPA): (Partial List of Applicable Standards)
    1. Reference CBC for applicable NFPA Standards - 2025 CBC (SFM) Chapter 35.
    2. NFPA 72 - National Fire Alarm and Signaling Code (CA Amended); 2025, as amended in 2025 CBC Ch.35 Referenced Standards.
    3. NFPA 241 - Standard for Safeguarding Construction, Alteration, and Demolition Operations; 2022.

D. 28 CFR 35 - Nondiscrimination on the Basis of Disability in State and Local Government Services; Final Rule; Department of Justice.

E. 28 CFR 36 - Nondiscrimination by Public Accommodations and in Commercial Facilities; Final Rule; Department of Justice.

F. 29 CFR 1910 - Occupational Safety and Health Standards.

G. 36 CFR 1191 - Americans with Disabilities Act (ADA) Accessibility Guidelines for Buildings and Facilities; Architectural Barriers Act (ABA) Accessibility Guidelines.

H. ADA Standards - 2010 ADA Standards for Accessible Design.

1.03 RELATED REQUIREMENTS

A. Section 01 40 00 - Quality Requirements.

PART 2 PRODUCTS - NOT USED

PART 3 EXECUTION - NOT USED

END OF SECTION

SECTION 01 45 33
CODE-REQUIRED SPECIAL INSPECTIONS AND PROCEDURES

PART 1 GENERAL

1.01 SECTION INCLUDES

A. Division of the State Architect (DSA) Procedures for construction oversight and inspections required during the course of construction.

B. Code-required special inspections.

1. Division of the State Architect (DSA) approved testing laboratory services and inspections required during the course of construction.

C. Testing services incidental to special inspections.

D. Submittals.

E. Fabricators' field services.

1.02 DEFINITIONS

A. Code or Building Code: California Building Code and, more specifically, Chapter 17A - Structural Tests and Special Inspections, of same.

B. Authority Having Jurisdiction (AHJ): Agency or individual officially empowered to enforce the building, fire and life safety code requirements of the permitting jurisdiction in which the Project is located.

C. NIST: National Institute of Standards and Technology.

D. Special Inspections and Tests: Inspections and testing of materials, installation, fabrication, erection, or placement of components and connections mandated by Building Code to safeguard public welfare.

1. Special inspections and tests are separate from and independent of tests and inspections conducted by District or Contractor for purposes of quality assurance and contract administration.

1.03 REFERENCE STANDARDS

A. ASTM E329 - Standard Specification for Agencies Engaged in Construction Inspection, Testing, or Special Inspection.

B. DSA IR 17-12 - Special Inspection Reporting Requirements.

C. DSA PR 13-01 - Construction Oversight Process.

1.04 SUBMITTALS

A. See Section 01 30 00 - Administrative Requirements for submittal procedures.

B. Special Inspection Agency Qualifications: Prior to start of work, Special Inspection Agency is required to:

1. Submit agency name, address, and telephone number, names of full time registered Engineer and responsible officer.

2. Submit copy of report of laboratory facilities inspection made by NIST Construction Materials Reference Laboratory during most recent inspection, with memorandum of remedies of any deficiencies reported by the inspection.
3. Submit certification that Special Inspection Agency is acceptable to AHJ.

C. Testing Agency Qualifications: Prior to start of work, Testing Agency is required to:
1. Testing and inspections will be performed by an independent testing laboratory selected and employed by the District and approved by the Division of the State Architect (DSA).
   a. Qualification of a testing agency or laboratory will be under the jurisdiction of the DSA Structural Safety Section (SSS). Procedural and acceptance criteria are set forth in the California Administrative Code (CAC) Chapter 4.

D. Manufacturer's Qualification Statement: When required by AHJ, submit documentation of manufacturing capability and quality control procedures. Include documentation of AHJ approval.

E. Fabricator's Qualification Statement: When required by AHJ, submit documentation of fabrication facilities and methods and quality control procedures. Include documentation of AHJ approval.

F. Comply with DSA IR 17-12.
1. DSA Form 291: From the engineering manager of the laboratory of record.

G. Special Inspection Reports: After each special inspection, Special Inspector is required to submit at least two copies of report; Two to Architect; one each to Structural Engineer, Division of the State Architect, Project Inspector for District, District, and Contractor
1. Include:
   a. File Number and Application Number assigned to this project by the DSA.
   b. Date issued.
   c. Project title and number.
   d. Name of Special Inspector.
   e. Date and time of special inspection.
   f. Identification of product and specifications section.
   g. Location in the Project.
   h. Type of special inspection.
   i. Date of special inspection.
   j. Results of special inspection.
   k. Compliance with contract documents.
2. Final Special Inspection Report: Document special inspections and correction of discrepancies prior to the start of the work.

H. Fabricator Special Inspection Reports: After each special inspection of fabricated items at fabricator's facility, Special Inspector is required to submit report to Architect, Division of the State Architect, Project Inspector for District, District, and Contractor
1. Include:
   a. Date issued.

b. Project title and number.
c. Name of Special Inspector.
d. Date and time of special inspection.
e. Identification of fabricated item and specification section.
f. Location in the Project.
g. Results of special inspection.
h. Verification of fabrication and quality control procedures.
i. Compliance with contract documents.
j. Compliance with referenced standards.

I. Test Reports: After each test or inspection, Testing Agency is required to submit report to Architect, Division of the State Architect, Project Inspector for District, District, and Contractor
1. Test Reports: Signed by a Civil Engineer licensed in the State of California.
2. Include:
a. Date issued.
b. Project title and number.
c. Name of inspector.
d. Date and time of sampling or inspection.
e. Identification of product and specifications section.
f. Location in the Project.
g. Type of test or inspection.
h. Date of test or inspection.
i. Results of test or inspection.
j. Compliance with contract documents.
k. Include all tests made, regardless of whether such tests indicate that the material is satisfactory or unsatisfactory.
1) Report samples taken but not tested.
2) Report of special sampling operations as required.
3) Show that the material or materials were sampled and tested in accordance with the requirements of the CBC, and with the approved specifications.
4) Definitely state whether or not the material or materials tested comply with requirements.
5) Issue test reports within 14 days of finding being known, to all parties listed above.

J. Certificates: When required by AHJ, Special Inspector will submit certification by manufacturer, fabricator, and installation subcontractor to Architect, Division of the State Architect, Project Inspector for District, District, and Contractor.
1. Indicate material or product complies with or exceeds specified requirements. Submit supporting reference data, affidavits, and certifications as appropriate.

2. Certificates may be recent or previous test results on material or product, but must be acceptable to Architect and AHJ.
3. At the completion of the project, Testing Laboratory to certify in writing and on all required DSA forms, that all work specified or required to be tested and inspected conforms to drawings, specifications and applicable building codes.

K. Fabricator's Inspection Reports: When required by AHJ, submit reports to Architect and AHJ.
1. Submit report in duplicate within 30 days of observation to Architect for information.

L. Verification of Test Reports:
1. Testing Laboratory of record to submit to the Division of the State Architect (DSA) a verified report covering all tests which are required to be made by that agency during the progress of the project.
   a. Such report shall be furnished each time that work on the project is suspended, covering the tests up to that time, and at the completion of the project.
   b. Specific testing requirements as listed on the Structural Test and Inspections (T&I) Form DSA-103 for this project. These tests *may* include the following forms:
      1) DSA-201: Soils Compaction.
      2) DSA-202: Sieve Analysis.
      3) DSA-203: Tension/Bend.
      4) DSA-204: Compression.
      5) DSA-250: Special Inspection(s).
      6) DSA-291: Laboratory Verified Report.
      7) DSA-292: Special Inspection(s) Verified Report(s).
      8) DSA-293: Geotechnical Verified Report.
   c. Other Division of the State Architect (DSA) Certification Documents (Reports) as may be required.
2. DSA Form 292 - Special Inspection Verified Report shall be from all special inspectors contracting directly and individually with the school board.

1.05 SPECIAL INSPECTION AND TESTING AGENCY

A. District is to employ services of Special Inspection Agency to perform inspections and associated testing and sampling in accordance with ASTM E329 and required by building code.

B. Special Inspection Agency may delegate to independent testing agency to perform testing and sampling associated with special inspections and required by building code.

C. Employment of agency in no way relieves Contractor of obligation to perform work in accordance with requirements of contract documents.

1.06 TESTING AND INSPECTION AGENCIES

A. District is to employ services of an independent inspection and testing agency to perform observation, testing and sampling associated with special inspections including those not required by the CBC and CAC
1. Project Inspector and testing lab are employed by the District and approved by:

a. A/E of Record.

b. Structural Engineer (when applicable).

c. DSA.

B. District Project Inspector:

1. A Project Inspector (IOR) employed by the District and approved by Architect, Structural Engineer and DSA in accordance with the requirements of the California Building Code will be assigned to the work.

   a. Project Inspector duties are specifically defined in Title 24 CCR Part 1, California Administrative Code Section 4-342.

2. The District's Inspector must at all times have access for the purpose of inspection to all parts of the work and to the shops where the work is in preparation, and the Contractor is required to at all times maintain proper facilities and provide safe access for such inspection.

3. The work of construction in all stages of progress shall be subject to the personal continuous observation of the District's Inspector.

   a. The Contractor is required to furnish the Project Inspector reasonable facilities for obtaining such information as may be necessary to keep him fully informed respecting the progress and manner of the work and the character of the materials.

   b. Inspection of the work does not relieve the Contractor from any obligation to fulfill the Contract.

   c. If determined by DSA, Project Inspector is required to work a normal 40 hour week on this project only. Any overtime required will be included in a deductive change order to the Contractor and sub-contractor requiring the inspection.

C. Employment of agency in no way relieves Contractor of obligation to perform work in accordance with requirements of contract documents.

D. Payments:

1. Costs of initial testing and inspection, except as specifically modified herein, or specified otherwise in technical sections, will be paid for by the District, providing such testing and inspection indicates compliance with Contract Documents. Initial tests and inspections are defined as the first tests and inspections as herein specified.

2. Testing Laboratory: Furnish to District a cost estimate breakdown covering initial tests and inspections required by Contract Documents. Estimate shall include number of tests, man-hours required for tests, field and plant inspections, travel time, and costs.

3. In the event a test or inspection indicates failure of a material or procedure to meet requirements of Contract Documents, costs for retesting and reinspection will be paid by the District and backcharged to the Contractor.

4. Additional tests and inspections not herein specified but requested by District or Architect, will be paid for by District, unless results of such tests and inspections are found to be not in compliance with Contract Documents, in which case the District will pay all costs for initial testing as well as retesting and reinspection and backcharge the Contractor.

   a. Costs for tests or inspections which are required to correct deficiencies will be paid by the District and backcharged to the Contractor.

b. Costs for additional tests or inspections required because of change in materials being provided or change of source or supply will be paid by District and backcharged to the Contractor.

c. Cost of testing which is required solely for the convenience of Contractor in his scheduling and performance of work will be paid by the District and backcharged to the Contractor.

d. Overtime costs for testing and inspections performed outside the regular work day hours, including weekends and holidays, will be paid for by the District and backcharged to the Contractor. Such costs include overtime costs for the District's Inspector.

5. Testing Laboratory: Separate and identify on the invoices, the costs covering all testing and inspections which are to be backcharged to the Contractor as specified above.

1.07 QUALITY ASSURANCE

A. Testing Agency must possess DSA LEA Program acceptance.

B. Special Inspection Agency Qualifications:

1. Independent firm specializing in performing testing and inspections of the type specified in this section.

C. Testing Agency Qualifications:

1. Independent firm specializing in performing testing and inspections of the type specified in this section.

D. Testing and inspection services which are performed are to be in accordance with requirements of the CBC, and as specified herein. Testing and inspection services are required to verify that work meets the requirements of the Construction Documents.

E. In general, tests and inspections for structural materials are to include all items enumerated on the Structural Tests and Inspections list for this project as prepared and distributed by the Architect.

F. Copies of Documents at Project Site: Maintain at the project site a copy of each referenced document. Online copies are acceptable.

PART 2 PRODUCTS - NOT USED

PART 3 EXECUTION

3.01 SPECIAL INSPECTIONS AND TESTING

A. The Code requires special inspections and testing of certain materials, components, assemblies, and connections used in constructing the project. Special inspections and testing will be performed in accordance with the Code.

B. Tests and inspections are required in accordance with DSA 103 Form.

C. Special inspections and testing will be performed in accordance with the Code for the following materials and project components:

1. Concrete.

2. Soils.

3. Fabricated items.
4. Seismic resistance.
5. Wind resistance.

3.02 SPECIAL INSPECTION AGENCY DUTIES AND RESPONSIBILITIES

A. Special Inspection Agency shall:
1. Provide qualified personnel at site. Cooperate with Architect and Contractor in performance of services.
2. Perform specified sampling and testing of products in accordance with specified reference standards.
3. Ascertain compliance of materials and products with requirements of Contract Documents.
4. Promptly notify Architect, Structural Engineer, Division of the State Architect, Project Inspector for District, District, and Contractor of observed irregularities or non-compliance of work or products.
5. Perform additional tests and inspections required by Architect.
6. Attend preconstruction meetings and progress meetings.
7. Submit reports of all tests or inspections specified.
8. Complete required DSA Forms.

B. Limits on Special Inspection Agency Authority:
1. Agency may not release, revoke, alter, or enlarge on requirements of Contract Documents.
2. Agency may not approve or accept any portion of the work.
3. Agency may not assume any duties of Contractor.
4. Agency has no authority to stop the work.

C. Re-testing required because of non-compliance with specified requirements shall be performed by the same agency on instructions by Architect.

D. Re-testing required because of non-compliance with specified requirements shall be paid for by Contractor. CAC 4-335 (b).

3.03 TESTING AGENCY DUTIES AND RESPONSIBILITIES

A. Testing Agency Duties:
1. Provide qualified personnel at site. Cooperate with Architect and Contractor in performance of services.
2. Perform specified sampling and testing of products in accordance with specified standards.
3. Ascertain compliance of materials and mixes with requirements of Contract Documents.
4. Promptly notify Architect and Contractor of observed irregularities or non-compliance of work or products.
5. Perform additional tests and inspections required by Architect.
6. Attend preconstruction meetings and progress meetings.

7. Submit reports of all tests or inspections specified.
8. Complete required DSA Forms.

B. Limits on Testing or Inspection Agency Authority:
1. Agency may not release, revoke, alter, or enlarge on requirements of Contract Documents.
2. Agency may not approve or accept any portion of the work.
3. Agency may not assume any duties of Contractor.
4. Agency has no authority to stop the work.

C. On instructions by Architect, perform re-testing required because of non-compliance with specified requirements, using the same agency.

D. Contractor will pay for re-testing required because of non-compliance with specified requirements.

E. At the completion of the project, Testing Laboratory shall certify in writing and on all required DSA forms, that all work specified or required to be tested and inspected conforms to drawings, specifications and applicable building codes.
1. See Division of the State Architect Procedure DSA PR 13-01.

3.04 CONTRACTOR DUTIES AND RESPONSIBILITIES

A. Each Multi-Prime Contractor or Subcontractor is required to comply with DSA Construction Oversight Procedure DSA PR 13-01. California Code of Regulations (CCR), Title 24, Part 1, CCR, Chapter 4, Article 1 (Sections 4-211 through 4-220) and Group1, Articles 5 and 6 (Sections 4-331 through 4-344) which provide regulations governing the construction process for projects under the jurisdiction of the Division of the State Architect (DSA).

B. Contractor Responsibilities, General:
1. Cooperate with agency and laboratory personnel; provide access to approved documents at project site, to the work, to manufacturers' facilities, and to fabricators' facilities.
2. Provide incidental labor and facilities:
   a. To provide access to work to be tested or inspected.
   b. To obtain and handle samples at the site or at source of Products to be tested or inspected.
   c. To facilitate tests or inspections.
   d. To provide storage and curing of test samples.
3. Notify Architect and laboratory 24 hours prior to expected time for operations requiring testing or inspection services.
4. Arrange with District's agency and pay for additional samples, tests, and inspections required by Contractor beyond specified requirements.
5. Retain special inspection records.

C. Submit a written "Statement of Responsibility" to comply with CBC section 1704A.4.

1. Each Contractor responsible for the construction of a main wind- or seismic-force-resisting system, designated seismic system or a wind- or seismic-resisting component listed in the statement of special inspections are required to submit a written statement of responsibility to the Division of the State Architect and the District prior to the commencement of work on the system or component. The "Statement of Responsibility" contains the following:
    a. Acknowledgment of awareness of the special requirements contained in the statement of special inspections;
    b. Acknowledgment that control will be exercised to obtain conformance with the construction documents approved by the building official;
    c. Procedures for exercising control within the contractor's organization, the method and frequency of reporting and the distribution of the reports; and
    d. Identification and qualifications of the person(s) exercising such control and their position(s) in the organization.

D. Contractor Responsibilities, Seismic Force-Resisting System, Designated Seismic System, and Seismic Force-Resisting Component: Submit written statement of responsibility for each item listed in the Statement of Special Inspections to AHJ and District prior to starting work. Statement of responsibility shall acknowledge awareness of special construction requirements and other requirements listed.

E. Contractor Responsibilities, Wind Force-Resisting System and Wind Force-Resisting Component: Submit written statement of responsibility for each item listed in the Statement of Special Inspections to AHJ and District prior to starting work. Statement of responsibility shall acknowledge awareness of special construction requirements and other requirements listed.

3.05 FABRICATORS' FIELD SERVICES

A. When required by AHJ or specified in individual specification sections, require fabricators to provide qualified staff personnel to observe site conditions, installation conditions, quality of workmanship, and start-up of equiment and systems and to initiate instructions when necessary.

B. Submit qualifications of observer to Architect 30 days in advance of required observations.
    1. Observer subject to approval of Architect.
    2. Observer subject to approval of District.

C. Report observations and site decisions or instructions given to applicators or installers that are supplemental or contrary to manufacturers' written instructions.

END OF SECTION

SECTION 01 50 00
TEMPORARY FACILITIES AND CONTROLS

PART 1 GENERAL

1.01 SECTION INCLUDES

A. Temporary telecommunications services.

B. Temporary sanitary facilities.

C. Temporary Controls: Barriers, enclosures, and fencing.

D. Security requirements.

E. Waste removal facilities and services.

F. Project identification sign.

1.02 RELATED REQUIREMENTS

A. Section 01 35 53 - Security Procedures

1.03 REFERENCE STANDARDS

A. ADA Standards - 2010 ADA Standards for Accessible Design.

B. CBC - California Building Code.

1.04 REGULATORY REQUIREMENTS

A. Construction Support Facilities: Comply wiht CBC Section 11B-201.4 and ADA Standards

1. "11B-201.4 Construction Support Facilities

a. These requirements shall apply to temporary or permanent construction support facilities for uses and activities not directly associated with the actual processes of construction, including but not limited to offices, meeting rooms, plan rooms, other administrative or support functions.

b. When provided, toilet and bathing facilities serving construction support facilities shall comply with Section 11B-213. When toilet and bathing facilities serving construction support facilities are provided by portable units, at least one of each type shall be accessible and connected to the construction support facilities it serves by an accessible route.

c. *Exception*: During construction an accessible route shall not be required between site arrival points or the boundary of the area of construction and the entrance to the construction support facilities if the only means of access between them is a vehicular way not providing pedestrian access."

1.05 TEMPORARY UTILITIES

A. Provide and pay for all electrical power, lighting, water, heating and cooling, and ventilation required for construction purposes.

B. Use trigger-operated nozzles for water hoses, to avoid waste of water.

1.06 TELECOMMUNICATIONS SERVICES

A. Provide, maintain, and pay for telecommunications services to field office at time of project mobilization and duration of the project.

B. Telecommunications services shall include:

1. Windows-based personal computer dedicated to project telecommunications, with necessary software and laser printer.

a. Provide color copier with scanning capabilities and 8.5 x 11 and 11x17 format; including copier paper for both formats.

2. Internet Connections: Minimum of one; 5G or faster.

1.07 TEMPORARY SANITARY FACILITIES

A. Provide and maintain required facilities and enclosures. Provide at time of project mobilization.

1. Provide temporary toilet facilities if maximum number of personnel on project is greater than 10.

2. Submit proposed location of temporary toilet(s) to District Representative for approval.

a. Place on-site portable toilets away from building air intakes and entryway.

B. Maintain daily in clean and sanitary condition.

1.08 BARRIERS

A. Provide barriers to prevent unauthorized entry to construction areas, to prevent access to areas that could be hazardous to workers or the public, to allow for owner's use of site and to protect existing facilities and adjacent properties from damage from construction operations and demolition.

B. Provide barricades and covered walkways required by governing authorities for public rights-of-way and for public access to existing building.

C. Protect non-owned vehicular traffic, stored materials, site, and structures from damage.

1.09 FENCING

A. Construction: Commercial grade chain link fence. Include windscreen with galvanized steel schedule 40 post and top rail.

B. Provide 6 foot high fence around construction site; equip with vehicular and pedestrian gates with locks.

1.10 EXTERIOR ENCLOSURES

A. Provide temporary weather tight closure of exterior openings to accommodate acceptable working conditions and protection for Products, to allow for temporary heating and maintenance of required ambient temperatures identified in individual specification sections, and to prevent entry of unauthorized persons. Provide access doors with self-closing hardware and locks.

1.11 SECURITY

A. Provide security and facilities to protect Work, existing facilities, and District's operations from unauthorized entry, vandalism, or theft.

B. Coordinate with District's security program.

1. Include construction surveillance camera system per the District.

1.12 CAFETERIA AND FOOD

A. Construction personnel shall police their own areas. All cups, cans, paper, wrappers, and discarded food must be placed in trash receptacles at end of each break.

B. Contractor(s) shall submit to District Representative proposed location of any break areas and eating areas for approval.

1.13 SMOKING AND TOBACCO

A. Smoking and vaping is not permitted on property.

B. No chewing tobacco or spitting of tobacco is permitted.

1.14 VEHICULAR ACCESS AND PARKING

A. Comply with regulations relating to use of streets and sidewalks, access to emergency facilities, and access for emergency vehicles.

B. Coordinate access and haul routes with governing authorities and District.

C. Provide and maintain access to fire hydrants, free of obstructions.

D. Provide means of removing mud from vehicle wheels before entering streets.

E. Provide temporary parking areas to accommodate construction personnel. When site space is not adequate, provide additional off-site parking.

1.15 WASTE REMOVAL

A. See Section 01 74 19 - Construction Waste Management and Disposal, for additional requirements.

B. Provide waste removal facilities and services as required to maintain the site in clean and orderly condition.

C. Provide containers with lids. Remove trash from site periodically.

D. If materials to be recycled or re-used on the project must be stored on-site, provide suitable non-combustible containers; locate containers holding flammable material outside the structure unless otherwise approved by the authorities having jurisdiction.

E. Open free-fall chutes are not permitted. Terminate closed chutes into appropriate containers with lids.

1.16 PROJECT IDENTIFICATION

A. Provide project identification sign of design, construction, and location approved by District.

B. No other signs are allowed without District permission except those required by law.

1.17 REMOVAL OF UTILITIES, FACILITIES, AND CONTROLS

A. Remove temporary utilities, equipment, facilities, materials, prior to Final Application for Payment inspection.

B. Remove underground installations to a minimum depth of 2 feet. Grade site as indicated.

C. Clean and repair damage caused by installation or use of temporary work.

D. Restore existing facilities used during construction to original condition.

E. Restore new permanent facilities used during construction to specified condition.

PART 2 PRODUCTS - NOT USED

PART 3 EXECUTION - NOT USED

END OF SECTION

SECTION 01 60 00
PRODUCT REQUIREMENTS

PART 1 GENERAL

1.01 SECTION INCLUDES

A. General product requirements.
   1. System Completeness.
   2. Installation of Products.

B. Re-use of existing products.

C. Transportation, handling, storage and protection.

D. Product option requirements.

E. Substitution limitations.

F. Procedures for District-supplied products.

G. Maintenance materials, including extra materials, spare parts, tools, and software.

1.02 RELATED REQUIREMENTS

A. Section 01 10 00 - Summary: Identification of District-supplied products.

B. Section 01 25 00 - Substitution Procedures: Substitutions made during procurement and/or construction phases.

C. Section 01 40 00 - Quality Requirements: Product quality monitoring.

D. Section 01 61 16 - Volatile Organic Compound (VOC) Content Restrictions: Requirements for VOC-restricted product categories.

E. Section 01 74 19 - Construction Waste Management and Disposal: Waste disposal requirements potentially affecting product selection, packaging and substitutions.

F. Technical Specifications Sections.

1.03 REFERENCE STANDARDS

A. CAL (CDPH SM) - Standard Method for the Testing and Evaluation of Volatile Organic Chemical Emissions from Indoor Sources Using Environmental Chambers Version 1.2.

B. CEC - California Electrical Code.

1.04 SUBMITTALS

A. Proposed Products List: Submit list of major products proposed for use, with name of manufacturer, trade name, and model number of each product.
   1. Submit within 30 calendar days after date of Agreement.
   2. For products specified only by reference standards, list applicable reference standards.

B. Product Data Submittals: Submit manufacturer's standard published data. Mark each copy to identify applicable products, models, options, and other data. Supplement manufacturers' standard data to provide information specific to this Project.

C. Shop Drawing Submittals: Prepared specifically for this Project; indicate utility and electrical characteristics, utility connection requirements, and location of utility outlets for service for functional equipment and appliances.

D. Sample Submittals: Illustrate functional and aesthetic characteristics of the product, with integral parts and attachment devices. Coordinate sample submittals for interfacing work.

1. For selection from standard finishes, submit samples of the full range of the manufacturer's standard colors, textures, and patterns.

1.05 QUALITY ASSURANCE

A. CAL (CDPH SM) v1.1: California Department of Public Health (CDPH) Standard Method for the Testing and Evaluation of Volatile Organic Chemical Emissions from Indoor Sources Using Environmental Chambers, v. 1.1–2010, for the emissions testing and requirements of products and materials.

PART 2 PRODUCTS

2.01 GENERAL REQUIREMENTS

A. Drawings and Specifications:

1. If a conflict exists between the Drawings and the Specifications (Project Manual), then the Contractor is to submit a Request for Interpretation from the Architect.

a. As noted in the General Conditions, the more stringent requirements govern, including cost of materials and/or installation.

2. If a specific product is indicated on the Drawings for use, then that product is to be used without exception in the location identified.

3. If the Contractor proposes the use of another "or Equal" product other than the item indicated, whether or not listed in these specifications, Contractor must submit the product using the complete substitution process**, prior to bid**. See the the Article titled "SUBSTITUTIONS".

4. DSA (Division of the State Architect) approval is also required prior to the use or installation of any substitution, on any product or location of product (requiring a revision to the Drawings or Specifications), included in these construction documents.

a. Installation of a non-approved product may result in the Contractor removing and replacing the non-approved product at the Contractor's own expense.

B. General: Items purchased for incorporation in the Work, whether purchased for the Project or taken from previously purchased stock, and include materials, equipment, assemblies, fabrications and systems.

1. Named Products: Items identified by manufacturer's product name, including make or model designations indicated in the manufacturer's published product data.

2. Materials: Products that are shaped, cut, worked, mixed, finished, refined or otherwise fabricated, processed or installed to form a part of the Work.

3. Equipment: A product with operating parts, whether motorized or manually operated, that requires connections such as wiring or piping.

C. Specific Product Requirements: Refer to requirements of Section 01 40 00 - Quality Requirements and individual product technical Sections for specific requirements for products.

D. Minimum Requirements: Specified requirements for products are minimum requirements. Refer to general requirements for quality of the Work specified in Section 01 40 00 - Quality Requirements and elsewhere herein.

E. Standard Products:

1. Where specific products are not specified, provide standard products of types and kinds that are suitable for the intended purposes and that are usually and customarily used on similar projects under similar conditions.

2. Products shall be as selected by Contractor and subject to review and acceptance by the District and Architect.

F. Product Completeness:

1. Provide products complete with all accessories, trim, finish, safety guards and other devices and details needed for a complete installation and for the intended use and effect.

2. Comply with additional requirements specified herein in Article titled "SYSTEM COMPLETENESS".

G. Code Compliance:

1. All products, other than commodity products prescribed by Code, are to have a current ICC Evaluation Service Research Report (ICC ESR), CABO National Evaluation Report (NER), or other testing agencies as accepted by the Division of the State Architect.

2. Refer to additional requirements specified in Section 01 41 00 - Regulatory Requirements.

2.02 SYSTEM COMPLETENESS

A. The Contract Drawings and Specifications are not intended to be comprehensive directions on how to produce the Work. Rather, the Drawings and Specifications are instruments of service prepared to describe the design intent for the completed Work.

B. It is intended that all equipment, systems and assemblies be complete and fully functional even though not fully described. Provide all products and operations necessary to achieve the design intent described in the Contract Documents.

C. Refer to related general requirements specified in Section 01 41 00 - Regulatory Requirements regarding compliance with minimum requirements of applicable codes, ordinances and standards.

D. Omissions and Misdescriptions: Contractor shall report to Architect immediately when elements essential to proper execution of the Work are discovered to be missing or misdescribed in the Drawings and Specifications or if the design intent is unclear.

1. Should an essential element be discovered as missing or misdescribed prior to receipt of Bids, an Addendum will be issued so that all costs may be accounted for in the Contract Sum.

2. Should an obvious omission or misdescription of a necessary element be discovered and reported after execution of the Agreement, Contractor shall provide the element as though fully and correctly described, and a no-cost Change Order shall be executed.

3. Refer to related General Requirements specified in Section 01 30 00 - Administrative Requirements regarding construction interfacing and coordination.

2.03 EXISTING PRODUCTS

A. Do not use materials and equipment removed from existing premises unless specifically required or permitted by Contract Documents.

B. Unforeseen historic items encountered remain the property of the District; notify District promptly upon discovery; protect, remove, handle, and store as directed by District.

C. Existing materials and equipment indicated to be removed, but not to be re-used, relocated, reinstalled, delivered to the District, or otherwise indicated as to remain the property of the District, become the property of the Contractor; remove from site.

2.04 NEW PRODUCTS

A. Provide new products unless specifically required or permitted by Contract Documents.

1. Provide products that fully comply with the Contract Documents, are undamaged and unused at installation.

2. Comply with additional requirements specified herein in Article titled "PRODUCT OPTIONS".

B. See Section 01 40 00 - Quality Requirements, for additional source quality control requirements.

C. Use of products having any of the following characteristics is not permitted:

1. Made outside the United States, its territories, Canada, or Mexico.

2. Containing lead, cadmium, or asbestos.

D. Where other criteria are met, Contractor shall give preference to products that:

1. If used on interior, have lower emissions, as defined in Section 01 61 16.

2. If wet-applied, have lower VOC content, as defined in Section 01 61 16.

3. Are extracted, harvested, and/or manufactured closer to the location of the project.

4. Have longer documented life span under normal use.

5. Result in less construction waste. See Section 01 74 19

E. Provide interchangeable components by the same manufacturer for components being replaced.

1. To the fullest extent possible, provide products of the same kind from a single source. Products required to be supplied in quantity shall be the same product and interchangeable throughout the Work.

2. When options are specified for the selection of any of two or more products, provide product selected to be compatible with products previously selected.

F. Product Nameplates and Instructions:

1. Except for required Code-compliance labels and operating and safety instructions, locate nameplates on inconspicuous, accessible surfaces. Do not attach manufacturer's identifying nameplates or trademarks on surfaces exposed to view in occupied spaces or to the exterior.

2. Provide a permanent nameplate on each item of service-connected or power-operated equipment. Nameplates shall contain identifying information and essential operating data such as the following example:
   a. Name of manufacturer
   b. Name of product
   c. Model and serial number
   d. Capacity
   e. Operating and Power Characteristics
   f. Labels of Tested Compliance with Codes and Standards
3. Refer to additional requirements which may be specified in various sections, as included in this Project Manual.
4. For each item of service-connected or power-operated equipment, provide operating and safety instructions, permanently affixed and of durable construction, with legible machine lettering. Comply with all applicable requirements of authorities having jurisdiction and listing agencies.

G. Wiring Terminations: Provide terminal lugs to match branch circuit conductor quantities, sizes, and materials indicated. Size terminal lugs to CEC, include lugs for terminal box.

2.05 PRODUCT OPTIONS

A. Unless the specifications state that no substitution is permitted, whenever the Contract Documents indicate any specific article, device, equipment, product, material, fixture, patented process, form, method, or type of construction or any specific name, make, trade name, or catalog number, with or without the words "or equal," such specification shall be deemed to be used for the purpose of facilitating description of the material, process, or article desired and shall be deemed to be followed by the words "or equal."
   1. See Section 01 25 00 - Substitution Procedures.

B. Products Specified by Reference Standards or by Description Only: Use any product meeting those standards or description.
   1. Reference Standards:
      a. Where Specifications require compliance with a standard, provided product shall fully comply with the standard specified.
      b. Refer to general requirements specified in Section 01 40 00 - Quality Requirements regarding compliance with referenced standards, standard specifications, codes, practices and requirements for products.
   2. Product Description:
      a. Where Specifications describe a product, listing characteristics required, with or without use of a brand name, provide a product that has the specified attributes and otherwise complies with specified requirements.
   3. Performance Requirements:
      a. Where Specifications require compliance with performance requirements, provide product(s) that comply and are recommended by the manufacturer for the intended application.

b. Verification of manufacturer's recommendations may be by product literature or by certification of performance from manufacturer.

C. Products Specified by Naming One or More Manufacturers with a Provision for Substitutions: Submit a request for substitution for any manufacturer not named, prior to bid .

D. Products Specified by Identification of Manufacturer and Product Name or Number:

1. "Specified Manufacturer": Provide the specified product(s) of the specified manufacturer.

a. If only one manufacturer is specified, without "acceptable manufacturers" being identified, provide only the specified product(s) of the specified manufacturer.

b. If District standard is indicated make all efforts to provide that product.

c. If the phrase "or equal" or "approved equal" is stated or reference is made to the "or equal provision," products of other manufacturers may be provided if such products are equivalent to the specified product(s) of the specified manufacturer.

1) Equivalence shall be demonstrated by submission of information in compliance with requirements of Section 01 25 00 - Substitution Procedures.

2. "Acceptable Manufacturers":

a. Product(s) of the named manufacturers, if equivalent to the specified product(s) of the specified manufacturer, will be acceptable in accordance with the requirements of Section 01 25 00 - Substitution Procedures.

1) Exception: Considerations regarding changes in Contract Time and Contract Sum will be waived if no increase in Contract Time or Contract Sum results from use of such equivalent products.

3. Unnamed manufacturers: Product(s) of unnamed manufacturers will be acceptable **when disclosed during the bidding period** and only as follows:

a. Unless specifically stated that substitutions will not be accepted or considered, the phrase "or equal" shall be assumed to be included in the description of specified product(s).

b. Equivalent products of unnamed manufacturers will be accepted in accordance with the "or equal" provision specified herein, below.

c. If provided, prior to bid, products of unnamed manufacturers shall be subject to the requirements of Section 01 25 00 - Substitution Procedures.

4. Quality basis:

a. Specified product(s) of the specified manufacturer shall serve as the basis by which products by named acceptable manufacturers and products of unnamed manufacturers will be evaluated.

b. Where characteristics of the specified product are described, where performance characteristics are identified or where reference is made to industry standards, such characteristics are specified to identify the most significant attributes of the specified product(s) which will be used to evaluate products of other manufacturers.

E. Products Specified by Combination of Methods: Where products are specified by a combination of attributes, including manufacturer's name, product brand name, product catalog or identification number, industry reference standard, or description of product characteristics, provide products conforming to all specified attributes.

F. "Or Equal" Provision: Where the phrase "or equal" or the phrase "or approved equal" is included, equivalent product(s) of unnamed manufacturer(s) may be provided as specified above in subparagraph titled "Unnamed manufacturers" and Section 01 25 00 - Substitution Procedures with the following conditions:

1. The requirements of Section 01 25 00 - Substitution Procedures applies to products provided under the "or equal" provision.
   a. Exception: If the proposed product(s) are determined to be equivalent to the specified product(s) of the specified manufacturer, the requirement specified for substitutions to result in a net reduction in Contract Time or Contract Sum may be waived.
2. Use of product(s) under the "or equal" provision shall not result in any delay in completion of the Work, including completion of portions of the Work for use by District or for work under separate contract by District.
3. Use of product(s) under the "or equal" provision shall not result in any costs to the District, including design fees and permit and plan check fees.
4. Use of product(s) under the "or equal" provision shall not require substantial change in the intent of the design, in the opinion of the Architect.
   a. The intent of the design shall include functional performance and aesthetic qualities.
5. The determination of equivalence will be made by the Architect and District, and such determination shall be final.

G. Visual Matching:

1. Where Specifications require matching a sample, the decision by the Architect on whether a proposed product matches shall be final.
2. Where no product visually matches but the product complies with other requirements, comply with provisions for substitutions for selection of a matching product in another category.

H. Visual Selection of Products:

1. Where requirements include the phrase "as selected from manufacturer's standard colors, patterns and textures", or a similar phrase, selections of products will be made by indicated party or, if not indicated, by the Architect. The will select color, pattern and texture from the product line of submitted manufacturer, if all other specified provisions are met.
2. The Architect will select color, pattern and texture from the product line of submitted manufacturer, if all other specified provisions are met.

2.06 MAINTENANCE MATERIALS

A. Furnish extra materials, spare parts, tools, and software of types and in quantities specified in individual specification sections.

B. Deliver to Project site; obtain receipt prior to final payment.

PART 3 EXECUTION

3.01 SUBSTITUTION LIMITATIONS

A. See Section 01 25 00 - Substitution Procedures.

3.02 OWNER-SUPPLIED PRODUCTS

A. See Section 01 10 00 - Summary for identification of District-supplied products.

B. District's Responsibilities:

1. Arrange for and deliver District reviewed shop drawings, product data, and samples, to Contractor.
2. Arrange and pay for product delivery to site.
3. On delivery, inspect products jointly with Contractor.
4. Submit claims for transportation damage and replace damaged, defective, or deficient items.
5. Arrange for manufacturers' warranties, inspections, and service.

C. Contractor's Responsibilities:

1. Review District reviewed shop drawings, product data, and samples.
2. Receive and unload products at site; inspect for completeness or damage jointly with District.
3. Handle, store, install and finish products.
4. Repair or replace items damaged after receipt.

3.03 TRANSPORTATION AND HANDLING

A. Package products for shipment in manner to prevent damage; for equipment, package to avoid loss of factory calibration.

B. If special precautions are required, attach instructions prominently and legibly on outside of packaging.

C. Coordinate schedule of product delivery to designated prepared areas in order to minimize site storage time and potential damage to stored materials.

1. Schedule delivery to minimize long-term storage and prevent overcrowding construction spaces.
2. Coordinate with installation to ensure minimum holding time for items that are flammable, hazardous, easily damaged, or sensitive to deterioration, theft and other losses.

D. Transport and handle products in accordance with manufacturer's instructions.

E. Transport products by methods to avoid product damage.

F. Transport materials in covered trucks to prevent contamination of product and littering of surrounding areas.

G. Promptly inspect shipments to ensure that products comply with requirements, quantities are correct, and products are undamaged.

H. Provide equipment and personnel to handle products by methods to prevent soiling, disfigurement, or damage, and to minimize handling.

I. Arrange for the return of packing materials, such as wood pallets, where economically feasible.

3.04 STORAGE AND PROTECTION

A. Provide protection of stored materials and products against theft, casualty, or deterioration.

B. Designate receiving/storage areas for incoming products so that they are delivered according to installation schedule and placed convenient to work area in order to minimize waste due to excessive materials handling and misapplication. See Section 01 74 19.

1. Structural Loading Limitations: Handle and store products and materials so as not to exceed static and dynamic load-bearing capacities of project floor and roof areas.

C. Inspection Provisions: Arrange storage to provide access for inspection and measurement of quantity or counting of units.

D. Structural Considerations: Store heavy materials away from the structure in a manner that will not endanger supporting construction.

E. Store and protect products in accordance with manufacturers' instructions.

F. Store with seals and labels intact and legible.

G. Arrange storage of materials and products to allow for visual inspection for the purpose of determination of quantities, amounts, and unit counts.

H. Store sensitive products in weathertight, climate-controlled enclosures in an environment favorable to product.

I. For exterior storage of fabricated products, place on sloped supports above ground.

1. Place products on raised blocks, pallets or other supports, above ground and in a manner to not create ponding or misdirection of runoff.

J. Provide bonded off-site storage and protection when site does not permit on-site storage or protection.

1. Execute a formal supplemental agreement between District and Contractor allowing off-site storage, for each occurrence.

K. Protect products from damage or deterioration due to construction operations, weather, precipitation, humidity, temperature, sunlight and ultraviolet light, dirt, dust, and other contaminants.

1. Periodically inspect to ensure products are undamaged, and are maintained under required conditions.

2. Remove and replace products damaged by improper storage or protection with new products at no change in Contract Sum or Contract Time.

3. Weather-Resistant Storage:

a. Store moisture-sensitive products above ground, under cover in a weathertight enclosure or covered with an impervious sheet covering. Provide adequate ventilation to avoid condensation.

b. Maintain storage within temperature and humidity ranges required by manufacturer's instructions.

c. Store loose granular materials on solid surfaces in a well-drained area. Prevent mixing with foreign matter.

L. Comply with manufacturer's warranty conditions, if any.

M. Do not store products directly on the ground.

N. Cover products subject to deterioration with impervious sheet covering. Provide ventilation to prevent condensation and degradation of products.

O. Store loose granular materials on solid flat surfaces in a well-drained area. Prevent mixing with foreign matter.

P. Prevent contact with material that may cause corrosion, discoloration, or staining.

Q. Provide equipment and personnel to store products by methods to prevent soiling, disfigurement, or damage.

R. Arrange storage of products to permit access for inspection. Periodically inspect to verify products are undamaged and are maintained in acceptable condition.

3.05 INSTALLATION OF PRODUCTS

A. Comply with manufacturer's instructions and recommendations for installation of products, except where more stringent requirements are specified, are necessary due to Project conditions or are required by authorities having jurisdiction.

B. Anchor each product securely in place, accurately located and aligned with other Work.

C. Clean exposed surfaces and provide protection to ensure freedom from damage and deterioration at time of Completion review. Refer to additional requirements specified in General Conditions along with Section 01 50 00 - Temporary Facilities and Controls and Section 01 70 00 - Execution and Closeout Requirements.

3.06 PROTECTION OF COMPLETED WORK

A. Provide barriers, substantial coverings and notices to protect installed Work from traffic and subsequent construction operations.

B. Remove protective measures when no longer required and prior to Completion review of the Work.

C. Comply with additional requirements specified in Section 01 50 00 - Temporary Construction Facilities and Controls.

END OF SECTION

SECTION 01 61 16
VOLATILE ORGANIC COMPOUND (VOC) CONTENT RESTRICTIONS

PART 1 GENERAL

1.01 SECTION INCLUDES

A. Requirements for Indoor-Emissions-Restricted products.

B. Requirements for VOC-Content-Restricted products.

C. Requirement for installer certification that they did not use any non-compliant products.

1.02 RELATED REQUIREMENTS

A. Section 01 30 00 - Administrative Requirements: Submittal procedures.

B. Section 01 40 00 - Quality Requirements: Procedures for testing and certifications.

C. Section 01 60 00 - Product Requirements: Fundamental product requirements, substitutions and product options, delivery, storage, and handling.

D. Section 07 92 00 - Joint Sealants: Emissions-compliant sealants.

1.03 DEFINITIONS

A. Indoor-Emissions-Restricted Products: All products in the following product categories, whether specified or not:

1. Interior paints and coatings applied on site.
2. Interior adhesives and sealants applied on site, including flooring adhesives.
3. Flooring.
4. Composite wood.
5. Products making up wall and ceiling assemblies.
6. Thermal and acoustical insulation.
7. Other products when specifically stated in the specifications.

B. VOC-Content-Restricted Products: All products in the following product categories, whether specified or not:

1. Exterior and interior paints and coatings.
2. Exterior and interior adhesives and sealants, including flooring adhesives.
3. Wet-applied roofing and waterproofing.
4. Other products when specifically stated in the specifications.

C. Interior of Building: Anywhere inside the exterior weather barrier.

D. Adhesives: All gunnable, trowelable, liquid-applied, and aerosol adhesives, whether specified or not; including flooring adhesives, resilient base adhesives, and pipe jointing adhesives.

E. Sealants: All gunnable, trowelable, and liquid-applied joint sealants and sealant primers, whether specified or not; including firestopping sealants and duct joint sealers.

F. Inherently Non-Emitting Materials: Products composed wholly of minerals or metals, unless they include organic-based surface coatings, binders, or sealants; and specifically the following:
   1. Concrete.
   2. Clay brick.
   3. Metals that are plated, anodized, or powder-coated.
   4. Glass.
   5. Ceramics.
   6. Solid wood flooring that is unfinished and untreated.

1.04 REFERENCE STANDARDS

A. 40 CFR 59, Subpart D - National Volatile Organic Compound Emission Standards for Architectural Coatings; U.S. Environmental Protection Agency.

B. ASTM D3960 - Standard Practice for Determining Volatile Organic Compound (VOC) Content of Paints and Related Coatings.

C. CAL (CDPH SM) - Standard Method for the Testing and Evaluation of Volatile Organic Chemical Emissions from Indoor Sources Using Environmental Chambers Version 1.2.

D. CARB (ATCM) - Airborne Toxic Control Measure to Reduce Formaldehyde Emissions from Composite Wood Products.

E. CARB (SCM) - Suggested Control Measure for Architectural Coatings; California Air Resources Board.

F. CHPS (HPPD) - High Performance Products Database.

G. CRI (GL) - Green Label Testing Program - Certified Products.

H. CRI (GLP) - Green Label Plus Testing Program - Certified Products.

I. GreenSeal GS-36 - Standard for Adhesives for Commercial Use.

J. SCAQMD 1113 - Architectural Coatings.

K. SCAQMD 1168 - Adhesive and Sealant Applications.

L. SCS (CPD) - SCS Certified Products.

M. UL (GGG) - GREENGUARD Gold Certified Products.

1.05 SUBMITTALS

A. See Section 01 30 00 - Administrative Requirements, for submittal procedures.

B. Product Data: For each VOC-restricted product used in the project, submit evidence of compliance.

C. Installer Certifications Regarding Prohibited Content: Require each installer of any type of product (not just the products for which VOC restrictions are specified) to certify that either 1) no adhesives, joint sealants, paints, coatings, or composite wood or agrifiber products have been used in the installation of installer's products, or 2) that such products used comply with these requirements.
   1. Use the form following this section for installer certifications.

D. Verification of compliance with VOC limits as specified in the CalGreen Code Section 5.504 shall be provided at the request of the Building Inspector.
   1. Product certification and specifications.
   2. Chain of custody certifications.
   3. Product, labeled and invoiced as meeting the Composite Wood Products regulation.
   4. Exterior grade products marked as meeting the PS-1 or PS-2 standards of the Engineered Wood Association, the Australian AS/NZS 2269 or European 636 3S standards
   5. Other methods approved by the building official.

E.

1.06 QUALITY ASSURANCE

A. Indoor Emissions Standard and Test Method: CAL (CDPH SM), using Standard Private Office exposure scenario and the allowable concentrations specified in the method, and range of total VOC's after 14 days.
   1. Wet-Applied Products: State amount applied in mass per surface area.
   2. Paints and Coatings: Test tinted products, not just tinting bases.
   3. Evidence of Compliance: Acceptable types of evidence are the following;
      a. Current UL (GGG) certification.
      b. Current SCS (CPD) Floorscore certification.
      c. Current SCS (CPD) Indoor Advantage Gold certification.
      d. Current listing in CHPS (HPPD) as a low-emitting product.
      e. Current CRI (GLP) certification.
      f. Test report showing compliance and stating exposure scenario used.
   4. Product data submittal showing VOC content is NOT acceptable evidence.
   5. Manufacturer's certification without test report by independent agency is NOT acceptable evidence.

B. VOC Content Test Method: 40 CFR 59, Subpart D (EPA Method 24), or ASTM D3960, unless otherwise indicated.
   1. Evidence of Compliance: Acceptable types of evidence are:
      a. Report of laboratory testing performed in accordance with requirements.
      b. Published product data showing compliance with requirements.
      c. Certification by manufacturer that product complies with requirements.

C. Composite Wood Emissions Standard: CARB (ATCM) for ultra-low emitting formaldehyde (ULEF) resins.
   1. Evidence of Compliance: Acceptable types of evidence are:
      a. Current SCS "No Added Formaldehyde (NAF)" certification; www.scscertified.com.
      b. Report of laboratory testing performed in accordance with requirements.
      c. Published product data showing compliance with requirements.
      d. Certification by manufacturer that product complies with requirements.

D. Testing Agency Qualifications: Independent firm specializing in performing testing and inspections of the type specified in this section.

PART 2 PRODUCTS

2.01 REGULATORY REQUIREMENTS

A. All VOC restricted products shall be compliant with local jursidiction, South Coast Air Quality Management District, and Caifornia Green Standards Code, Rules and Regulations in effect at the time of installation. Products specified in this project shall be used as a basis of design. Updated products that are compliant with the rules in force at the time of installation shall be submitted as substitutions when they become available.

1. If a product is found to be non-compliant with the VOC rules at the scheduled time of installation, notify the Architect a minimum of 90 days prior to installation. Contractor shall submit a suggested compliant product that is equal to the performance and cost of the specified product using the substitution procedure.

2.02 MATERIALS

A. All Products: Comply with the most stringent of federal, State, and local requirements, or these specifications.

B. Indoor-Emissions-Restricted Products: Comply with Indoor Emissions Standard and Test Method, except for:

1. Composite Wood, Wood Fiber, and Wood Chip Products: Comply with Composite Wood Emissions Standard or contain no added formaldehyde resins.

   a. Comply with CalGreen Building Standards Section 5.504.4.5, Table 504.4.4.5 "Formaldehyde Limits".

2. Inherently Non-Emitting Materials.

C. VOC-Content-Restricted Products: VOC content not greater than required by the following:

1. Adhesives, Including Flooring Adhesives: SCAQMD 1168 Rule.
2. Aerosol Adhesives: GreenSeal GS-36.
3. Joint Sealants: SCAQMD 1168 Rule.
4. Paints and Coatings: Each color; most stringent of the following:

   a. 40 CFR 59, Subpart D.
   b. SCAQMD 1113 Rule.
   c. CARB (SCM).
   d. CalGreen Building Standards Section 5.504, Table 504.4.3 "VOC Content Limits for Architectural Coatings".
   e. Clear Wood Finishes, Floor Coatings, Stains, Primers and Shellacs: Do not exceed the VOC content limits established in SCAQMD 1113 rule.

5. Wet-Applied Roofing and Waterproofing: Comply with requirements for paints and coatings.
6. Carpet, Carpet Tile, and Adhesive: Provide products having VOC content not greater than that required for CRI (GLP) certification.

a. Comply with CalGreen Building Standards Section 5.504, Table 504.4.1 "Adhesive VOC Limit".

7. Carpet Cushion: Provide products having VOC content not greater than that required for CRI (GL) certification.

a. Comply with CalGreen Building Standards Section 5.504, Table 504.4.1 "Adhesive VOC Limit".

D. Other Product Categories: Comply with limitations specified elsewhere.

PART 3 EXECUTION

3.01 FIELD QUALITY CONTROL

A. District reserves the right to reject non-compliant products, whether installed or not, and require their removal and replacement with compliant products at no extra cost to District.

B. Additional costs to restore indoor air quality due to installation of non-compliant products will be borne by Contractor.

END OF SECTION

SECTION 01 61 16.01
ACCESSORY MATERIAL VOC CONTENT CERTIFICATION FORM

FORM

1.01 IDENTIFICATION:

A. Project Name: Naranca ES Relocatable Classroom Buildings

B. Project No.: 1-16-21

C. Architect: Ruhnau Clarke Architects

1.02 USE OF THIS FORM:

A. Because installers are allowed and directed to choose accessory materials suitable for the applicable installation, there is a possibility that such accessory materials might contain VOC content in excess of that permitted, especially where such materials have not been explicitly specified.

1. Each installer of work on this project is required to certify that his/their use of these particular materials complies with the contract documents and to provide documentation showing that the products used do not contain the prohibited content.

B. Contractor is required to obtain and submit this form from each installer of work on this project.

C. For each product category listed, check the correct paragraph.

D. If any of these accessory materials has been used, attach to this form product data and MSDS sheet for each such product.

1.03 VOC CONTENT RESTRICTIONS ARE SPECIFIED IN SECTION 01 61 16.

A. Volatile organic compounds (VOCs) are defined by the U.S. EPA, California Air Resources Board (CARB), South Coast Air Quality Management District (SCAQMD), along with other state and local regulations applicable to this project.

2.01 PRODUCT CERTIFICATION

A. I certify that the installation work of my firm on this project:

1. [HAS] [HAS NOT] required the use of any ADHESIVES.
2. [HAS] [HAS NOT] required the use of any JOINT SEALANTS.
3. [HAS] [HAS NOT] required the use of any PAINTS OR COATINGS.
4. [HAS] [HAS NOT] required the use of any COMPOSITE WOOD or AGRIFIBER PRODUCTS.

B. Product data and MSDS sheets are attached.

3.01 CERTIFIED BY: (INSTALLER/MANUFACTURER/SUPPLIER FIRM)

A. Firm Name: _____

B. Print Name: _____

C. Signature: _____

D. Title: _____ (officer of company)

E. Date: _____

END OF SECTION

SECTION 01 70 00
EXECUTION AND CLOSEOUT REQUIREMENTS

PART 1 GENERAL

1.01 SECTION INCLUDES

A. Examination, preparation, and general installation procedures.

B. Requirements for alterations work, including selective demolition.

C. Pre-installation meetings.

D. Cutting and patching.

E. Surveying for laying out the work.

F. Cleaning and protection.

G. Starting of systems and equipment.

H. Demonstration and instruction of District personnel.

I. Closeout procedures, including Contractor's Correction Punch List, except payment procedures.

J. General requirements for maintenance service.

1.02 RELATED REQUIREMENTS

A. Section 01 30 00 - Administrative Requirements: Submittals procedures.

B. Section 01 40 00 - Quality Requirements: Testing and inspection procedures.

C. Section 01 45 33 - Code-Required Special Inspections and Procedures: Construction oversight procedures by Division of the State Architect regarding the execution, approval, and closeout of this building project.

D. Section 01 50 00 - Temporary Facilities and Controls: Temporary exterior enclosures.

E. Section 01 50 00 - Temporary Facilities and Controls: Temporary interior partitions.

F. Section 01 74 19 - Construction Waste Management and Disposal: Additional procedures for trash/waste removal, recycling, salvage, and reuse.

G. Section 01 78 00 - Closeout Submittals: Project record documents, operation and maintenance data, warranties, and bonds.

H. Section 02 41 00 - Demolition: Demolition of whole structures and parts thereof; site utility demolition.

I. Individual Product Specification Sections:

1. Advance notification to other sections of openings required in work of those sections.
2. Limitations on cutting structural members.

1.03 REFERENCE STANDARDS

A. CBC Chapter 11B - California Building Code-Chapter 11B.

B. CBC Chapter 33 - Safeguards During Construction.

C. CFC Chapter 33 - California Fire Code - Chapter 33 - Fire Safety during Construction and Demolition.

D. CFC Chapter 35 - California Fire Code - Chapter 35 - Welding and other Hot Work.

E. DSA BU 24-05 - Fire Safety During Construction and Demolition.

F. NFPA 241 - Standard for Safeguarding Construction, Alteration, and Demolition Operations.

1.04 SUBMITTALS

A. See Section 01 30 00 - Administrative Requirements, for submittal procedures.

B. Survey work: Submit name, address, and telephone number of Surveyor before starting survey work.

1. On request, submit documentation verifying accuracy of survey work.
2. Submit a copy of site drawing signed by the Land Surveyor, that the elevations and locations of the work are in compliance with Contract Documents.
3. Submit surveys and survey logs for the project record.

C. Cutting and Patching: Submit written request in advance of cutting or alteration that affects:

1. Structural integrity of any element of Project.
2. Integrity of weather exposed or moisture resistant element.
3. Efficiency, maintenance, or safety of any operational element.
4. Visual qualities of sight exposed elements.
5. Work of District or separate Contractor.
6. Include in request:
   a. Identification of Project.
   b. Location and description of affected work.
   c. Necessity for cutting or alteration.
   d. Description of proposed work and products to be used.
   e. Effect on work of District or separate Contractor.
   f. Effect on existing construction of District and, if applicable, work for Project being provided by District under separate contract.
   g. Written permission of affected separate Contractor.
   h. Date and time work will be executed.
7. Include written evidence that those performing work under separate contract for District have been notified and acknowledge that cutting and patching work will be occurring. Include written permission for intended cutting and patching, included scheduled times.

D. Project Record Documents: Accurately record actual locations of capped and active utilities.

1.05 QUALIFICATIONS

A. For demolition work, employ a firm specializing in the type of work required.

1. Minimum of 5 years of documented experience.

B. For surveying work, employ a land surveyor registered in California and acceptable to Architect. Submit evidence of surveyor's Errors and Omissions insurance coverage in the form of an Insurance Certificate. Employ only individual(s) trained and experienced in collecting and recording accurate data relevant to ongoing construction activities,

C. For field engineering, employ a professional engineer of the discipline required for specific service on Project, licensed in California. Employ only individual(s) trained and experienced in establishing and maintaining horizontal and vertical control points necessary for laying out construction work on project of similar size, scope and/or complexity.

D. For design of temporary shoring and bracing, employ a Professional Engineer experienced in design of this type of work and licensed in California.

1.06 PROJECT CONDITIONS

A. Ventilate enclosed areas to assist cure of materials, to dissipate humidity, and to prevent accumulation of dust, fumes, vapors, or gases.

B. Erosion and Sediment Control: Plan and execute work by methods to control surface drainage from cuts and fills, from borrow and waste disposal areas. Prevent erosion and sedimentation.

1. Minimize amount of bare soil exposed at one time.
2. Provide temporary measures such as berms, dikes, and drains, to prevent water flow.
3. Construct fill and waste areas by selective placement to avoid erosive surface silts or clays.
4. Periodically inspect earthwork to detect evidence of erosion and sedimentation; promptly apply corrective measures.

C. Noise Control: Provide methods, means, and facilities to minimize noise produced by construction operations.

1. At All Times: Excessively noisy tools and operations will not be tolerated inside the building at any time of day; excessively noisy includes jackhammers, pneumatic hammers, and air-operated nail guns.
2. Outdoors: Limit conduct of especially noisy exterior work to the hours of 8 am to 5 pm.

D. Pest and Rodent Control: Provide methods, means, and facilities to prevent pests and insects from damaging the work.

E. Rodent Control: Provide methods, means, and facilities to prevent rodents from accessing or invading premises.

1.07 COORDINATION

A. See Section 01 10 00 for occupancy-related requirements.

B. Coordinate scheduling, submittals, and work of the various sections of the Project Manual to ensure efficient and orderly sequence of installation of interdependent construction elements, with provisions for accommodating items installed later.

C. Notify affected utility companies and comply with their requirements.

D. Verify that utility requirements and characteristics of new operating equipment are compatible with building utilities. Coordinate work of various sections having interdependent responsibilities for installing, connecting to, and placing in service, such equipment.

E. Coordinate space requirements, supports, and installation of mechanical and electrical work that are indicated diagrammatically on drawings. Follow routing indicated for pipes, ducts, and conduit, as closely as practicable; place runs parallel with lines of building. Utilize spaces efficiently to maximize accessibility for other installations, for maintenance, and for repairs.

F. In finished areas except as otherwise indicated, conceal pipes, ducts, and wiring within the construction. Coordinate locations of fixtures and outlets with finish elements.

G. Coordinate completion and clean-up of work of separate sections.

H. After District occupancy of premises, coordinate access to site for correction of defective work and work not in accordance with Contract Documents, to minimize disruption of District's activities.

PART 2 PRODUCTS

2.01 PATCHING MATERIALS

A. New Materials: As specified in product sections; match existing products and work for patching and extending work.

B. Type and Quality of Existing Products: Determine by inspecting and testing products where necessary, referring to existing work as a standard.

C. Product Substitution: For any proposed change in materials, submit request for substitution described in Section 01 60 00 - Product Requirements.

PART 3 EXECUTION

3.01 EXAMINATION

A. Verify that existing site conditions and substrate surfaces are acceptable for subsequent work. Start of work means acceptance of existing conditions.

B. Verify that existing substrate is capable of structural support or attachment of new work being applied or attached.

C. Examine and verify specific conditions described in individual specification sections.

D. Take field measurements before confirming product orders or beginning fabrication, to minimize waste due to over-ordering or misfabrication.

E. Verify that utility services are available, of the correct characteristics, and in the correct locations.

F. Prior to Cutting: Examine existing conditions prior to commencing work, including elements subject to damage or movement during cutting and patching. After uncovering existing work, assess conditions affecting performance of work. Beginning of cutting or patching means acceptance of existing conditions.

3.02 PREPARATION

A. Clean substrate surfaces prior to applying next material or substance.

B. Seal cracks or openings of substrate prior to applying next material or substance.

C. Apply manufacturer required or recommended substrate primer, sealer, or conditioner prior to applying any new material or substance in contact or bond.

3.03 PREINSTALLATION MEETINGS

A. When required in individual specification sections, convene a preinstallation meeting at the site prior to commencing work of the section.

1. Coordinate operations of the various trades to assure efficient and orderly installation of each part of Work.
2. Coordinate Work operations of the various trades that depend on each other for proper installation, connection, and operation of Work, including but not limited to:
   a. Schedule construction operations in sequence required where installation of one part of Work depends on installation of other components, before or after its own installation.
   b. Coordinate installation of different components to assure maximum accessibility for required maintenance, service, and repair.
   c. Provide provisions to accommodate items scheduled for later installation.

B. Require attendance of parties directly affecting, or affected by, work of the specific section.

C. Notify Architect four days in advance of meeting date.

D. Prepare agenda and preside at meeting:

1. Review conditions of examination, preparation and installation procedures.
2. Review coordination with related work.

E. Record minutes and distribute copies within two days after meeting to participants, with electronic copies to Architect, District, participants, and those affected by decisions made.

3.04 LAYING OUT THE WORK

A. Verify locations of survey control points prior to starting work.

B. Promptly notify Architect of any discrepancies discovered.

C. Protect survey control points prior to starting site work; preserve permanent reference points during construction.

D. Promptly report to Architect the loss or destruction of any reference point or relocation required because of changes in grades or other reasons.

E. Replace dislocated survey control points based on original survey control. Make no changes without prior written notice to Architect.

F. Utilize recognized engineering survey practices.

G. Establish a minimum of two permanent bench marks on site, referenced to established control points. Record locations, with horizontal and vertical data, on project record documents.

H. Establish elevations, lines and levels. Locate and lay out by instrumentation and similar appropriate means:

1. Site improvements including pavements; stakes for grading, fill and topsoil placement; utility locations, slopes, and invert elevations.
2. Grid or axis for structures.
3. Building foundation, column locations, ground floor elevations.

I. Periodically verify layouts by same means.

J. Maintain a complete and accurate log of control and survey work as it progresses.

3.05 GENERAL INSTALLATION REQUIREMENTS

A. Dimensions for Accessibility:

1. Conventions: See CBC Chapter 11B Figure 11B-104. Dimensions that are not stated as "maximum" or "minimum" are absolute.
2. Tolerances shall be per CBC Chapter 11B-104.1.1 "Construction and manufacturing tolerances. All dimensions are subject to conventional industry tolerances except where the requirement is stated as a range with specific minimum and maximum end points."

B. In addition to compliance with regulatory requirements, conduct construction operations in compliance with CBC Chapter 33, CFC Chapter 33, CFC Chapter 35, and NFPA 241, including applicable recommendations in Appendix A.

1. When welding or doing other hot work, comply with CFC Chapter 35.
2. Provide a Site Fire Safety Plan prior to the start of work, in coordination with the local fire authority. Comply with DSA BU 24-05.
   a. A Site Fire Safety Plan and form DSA 102-IC: Construction Start Notice/Inspection Card Request for submittal through the Architect to the Division of the State Architect.
   b. At a minimum, the site fire safety plan shall include the following information required in CFC Section 3303.1.1.
      1) Name and contact information of site safety director.
      2) Documentation of training of the site safety director and fire watch personnel.
      3) Procedures for reporting emergencies.
      4) Fire department vehicle access routes.
      5) Locations of fire protection equipment, including portable fire extinguishers, standpipes, fire department connections and fire hydrants.
      6) Smoking and cooking policies, designated area to be used where approved, and signage locations in accordance with CFC Section 3305.8.
      7) Location and safety considerations for temporary heating equipment.
      8) Hot work (welding, roofing, etc.) plan.
      9) Plans for control of combustible waste.
      10) Locations and methods for storage and use of flammable and combustible liquids and other hazardous materials.
      11) Provisions for site security.
      12) Changes that affect this plan.
      13) Other site specific information requested by the local fire authority (LFA).

C. Install products as specified in individual sections, in accordance with manufacturer's instructions and recommendations, and so as to avoid waste due to necessity for replacement.

D. Make vertical elements plumb and horizontal elements level, unless otherwise indicated.

E. Install equipment and fittings plumb and level, neatly aligned with adjacent vertical and horizontal lines, unless otherwise indicated.

F. Make consistent texture on surfaces, with seamless transitions, unless otherwise indicated.

G. Make neat transitions between different surfaces, maintaining texture and appearance.

3.06 ALTERATIONS

A. Drawings showing existing construction and utilities are based on casual field observation and existing record documents only.

1. Verify that construction and utility arrangements are as indicated.
2. Report discrepancies to Architect before disturbing existing installation.
3. Beginning of alterations work constitutes acceptance of existing conditions.

B. Keep areas in which alterations are being conducted separated from other areas that are still occupied.

1. Provide, erect, and maintain temporary dustproof partitions of construction specified in Section 01 50 00 .

C. Maintain weatherproof exterior building enclosure except for interruptions required for replacement or modifications; take care to prevent water and humidity damage.

D. Remove existing work as indicated and as required to accomplish new work.

1. Remove rotted wood, corroded metals, and deteriorated masonry and concrete; replace with new construction specified.

E. Services (Including but not limited to Fire Protection, Electrical, and Telecommunications): Remove, relocate, and extend existing systems to accommodate new construction.

1. Maintain existing active systems that are to remain in operation; maintain access to equipment and operational components; if necessary, modify installation to allow access or provide access panel.
2. Where existing systems or equipment are not active and Contract Documents require reactivation, put back into operational condition; repair supply, distribution, and equipment as required.
3. Where existing active systems serve occupied facilities but are to be replaced with new services, maintain existing systems in service until new systems are complete and ready for service.
4. Verify that abandoned services serve only abandoned facilities.
5. Remove abandoned pipe, ducts, conduits, and equipment , including those above accessible ceilings; remove back to source of supply where possible, otherwise cap stub and tag with identification; patch holes left by removal using materials specified for new construction.

F. Protect existing work to remain.

G. Adapt existing work to fit new work: Make as neat and smooth transition as possible.

1. When existing finished surfaces are cut so that a smooth transition with new work is not possible, terminate existing surface along a straight line at a natural line of division and make recommendation to Architect.
2. Where removal of partitions or walls results in adjacent spaces becoming one, rework floors, walls, and ceilings to a smooth plane without breaks, steps, or bulkheads.

3. Where a change of plane of 1/4 inch or more occurs in existing work, submit recommendation for providing a smooth transition for Architect review and request instructions.
4. Trim existing wood doors as necessary to clear new floor finish. Refinish trim as required.

H. Patching: Where the existing surface is not indicated to be refinished, patch to match the surface finish that existed prior to cutting. Where the surface is indicated to be refinished, patch so that the substrate is ready for the new finish.

I. Refinish existing surfaces as indicated:

J. Clean existing systems and equipment.

K. Remove demolition debris and abandoned items from alterations areas and dispose of off-site; do not burn or bury.

L. Do not begin new construction in alterations areas before demolition is complete.

M. Comply with all other applicable requirements of this section.

3.07 CUTTING AND PATCHING

A. Whenever possible, execute the work by methods that avoid cutting or patching.

B. See Alterations article above for additional requirements.

C. Perform whatever cutting and patching is necessary to:
1. Complete the work.
2. Fit products together to integrate with other work.
3. Provide openings for penetration of mechanical, electrical, and other services.
4. Match work that has been cut to adjacent work.
5. Repair areas adjacent to cuts to required condition.
6. Repair new work damaged by subsequent work.
7. Remove samples of installed work for testing when requested.
8. Remove and replace defective and non-complying work.

D. Execute work by methods that avoid damage to other work and that will provide appropriate surfaces to receive patching and finishing. In existing work, minimize damage and restore to original condition.
1. Coordinate installation or application of products for integrated Work.
2. Uncover completed Work as necessary to install or apply products out of sequence.
3. Remove and replace defective or non-conforming Work.
4. Provide openings for penetration of utility services, such as plumbing, mechanical and electrical Work.

E. After uncovering existing Work, inspect conditions affecting proper accomplishment of Work.

F. Temporary Supports: Provide supports to ensure structural integrity of the Work. Provide devices and methods to protect other portions of Project from damage.

G. Beginning of cutting or patching shall be interpreted to mean that existing conditions were found by Contractor to be acceptable.

H. Employ skilled and experienced installer to perform cutting for weather exposed and moisture resistant elements, and sight exposed surfaces.

I. Cut rigid materials using masonry saw or core drill. Pneumatic tools not allowed without prior approval.

   1. Use a diamond grit abrasive saw or similar cutter for smooth edges. Do not overcut corners.

J. Restore work with new products in accordance with requirements of Contract Documents.

K. Fit work air tight to pipes, sleeves, ducts, conduit, and other penetrations through surfaces.

L. Fit work neat and tight allowing for expansion and contraction.

M. At penetrations of fire rated walls, partitions, ceiling, or floor construction, completely seal voids with fire rated material , to full thickness of the penetrated element.

N. Patching:

   1. Finish patched surfaces to match finish that existed prior to patching. On continuous surfaces, refinish to nearest intersection or natural break. For an assembly, refinish entire unit.
   2. Match color, texture, and appearance.
   3. Repair patched surfaces that are damaged, lifted, discolored, or showing other imperfections due to patching work. If defects are due to condition of substrate, repair substrate prior to repairing finish.

O. Finishing: Refinish surfaces to match adjacent and similar finishes as used for the Project.

   1. For continuous surfaces, refinish to nearest intersection or natural break.
   2. For an assembly, refinish entire unit.

3.08 PROGRESS CLEANING

A. Maintain areas free of waste materials, debris, and rubbish. Maintain site in a clean and orderly condition.

B. Remove debris and rubbish from pipe chases, plenums, attics, crawl spaces, and other closed or remote spaces, prior to enclosing the space.

C. Broom and vacuum clean interior areas prior to start of surface finishing, and continue cleaning to eliminate dust.

D. Collect and remove waste materials, debris, and trash/rubbish from site weekly and dispose off-site; do not burn or bury.

3.09 PROTECTION OF INSTALLED WORK

A. Protect installed work from damage by construction operations.

B. Provide special protection where specified in individual specification sections.

C. Provide temporary and removable protection for installed products. Control activity in immediate work area to prevent damage.

D. Provide protective coverings at walls, projections, jambs, sills, and soffits of openings.

E. Protect finished floors, stairs, and other surfaces from traffic, dirt, wear, damage, or movement of heavy objects, by protecting with durable sheet materials.

F. Protect work from spilled liquids. If work is exposed to spilled liquids, immediately remove protective coverings, dry out work, and replace protective coverings.

G. Prohibit traffic or storage upon waterproofed or roofed surfaces. If traffic or activity is necessary, obtain recommendations for protection from waterproofing or roofing material manufacturer.

H. Prohibit traffic from landscaped areas.

I. Remove protective coverings when no longer needed; reuse or recycle coverings if possible.

3.10 SYSTEM STARTUP

A. Coordinate schedule for start-up of various equipment and systems.

B. Verify that each piece of equipment or system has been checked for proper lubrication, drive rotation, belt tension, control sequence, and for conditions that may cause damage.

C. Verify tests, meter readings, and specified electrical characteristics agree with those required by the equipment or system manufacturer.

D. Verify that wiring and support components for equipment are complete and tested.

E. Execute start-up under supervision of applicable Contractor personnel and manufacturer's representative in accordance with manufacturers' instructions.

F. When specified in individual specification Sections, require manufacturer to provide authorized representative to be present at site to inspect, check, and approve equipment or system installation prior to start-up, and to supervise placing equipment or system in operation.

G. Submit a written report that equipment or system has been properly installed and is functioning correctly.

3.11 DEMONSTRATION AND INSTRUCTION

A. Demonstrate operation and maintenance of products to District's personnel two weeks prior to date of final inspection.

B. Demonstrate start-up, operation, control, adjustment, trouble-shooting, servicing, maintenance, and shutdown of each item of equipment at scheduled time, at equipment location.

C. For equipment or systems requiring seasonal operation, perform demonstration for other season within six months.

D. Provide a qualified person who is knowledgeable about the Project to perform demonstration and instruction of Owner's personnel.

E. Utilize operation and maintenance manuals as basis for instruction. Review contents of manual with District's personnel in detail to explain all aspects of operation and maintenance.

F. Prepare and insert additional data in operations and maintenance manuals when need for additional data becomes apparent during instruction.

G. The amount of time required for instruction on each item of equipment and system is that specified in individual sections.

3.12 ADJUSTING

A. Adjust operating products and equipment to ensure smooth and unhindered operation.

3.13 FINAL CLEANING

A. Execute final cleaning prior to final project assessment.

1. Clean areas to be occupied by District prior to final completion before District occupancy.

B. Use cleaning materials that are nonhazardous.

1. Cleaning Agents and Materials: Use only those cleaning agents and materials which will not create hazards to health or property and which will not damage or degrade surfaces.

a. Use only those cleaning agents, materials and methods recommended by manufacturer of the material to be cleaned.

b. Use cleaning materials only on surfaces recommended by cleaning agent manufacturer.

c. Before use, review cleaning agents and materials with District Representative for suitability and compatibility. Use no cleaning agents and materials without approval as noted above.

2. Cleaning Procedures: All cleaning processes, agents and materials shall be subject to Architect, District and/or District Representative review and approval. Processes and degree of cleanliness shall be as directed by Architect, District and/or District Representative.

C. Clean interior and exterior glass, surfaces exposed to view; remove temporary labels, stains and foreign substances, polish transparent and glossy surfaces, vacuum carpeted and soft surfaces.

D. Remove all labels that are not permanent. Do not paint or otherwise cover fire test labels or nameplates on mechanical and electrical equipment.

E. Clean equipment and fixtures to a sanitary condition with cleaning materials appropriate to the surface and material being cleaned.

F. Clean filters of operating equipment.

G. Clean debris from roofs, gutters, downspouts, scuppers, overflow drains, area drains, and drainage systems.

H. Clean site; sweep paved areas, rake clean landscaped surfaces.

I. Remove waste, surplus materials, trash/rubbish, and construction facilities from the site; dispose of in legal manner; do not burn or bury.

3.14 PROJECT CLOSEOUT CONFERENCE

A. Schedule and conduct a project closeout conference, at a time convenient to District and Architect, but no later than 90 days prior to the scheduled date of Completion.

1. Conduct the conference to review requirements and responsibilities related to Project closeout.

2. Attendees: Authorized representatives of District, Commissioning Authority (CxA), Architect, and relevant consultants; Contractor and project superintendent; major subcontractors; suppliers; and other concerned parties shall attend the meeting. Participants at the meeting shall be familiar with Project and authorized to conclude matters relating to the Work.

3. Agenda: Discuss items of significance that could affect or delay Project closeout, including the following:
   a. Preparation of record documents.
   b. Procedures required prior to inspection for Completion and for final inspection for acceptance.
   c. Submittal of written warranties.
   d. Coordination of separate contracts.
   e. Installation of District's furniture, fixtures, and equipment.
   f. Responsibility for removing temporary facilities and controls.
4. Record minutes and distribute copies within two days after meeting to participants, with two copies to Architect, District, participants, and those affected by decisions made.

3.15 CLOSEOUT PROCEDURES

A. Make submittals that are required by governing or other authorities.
   1. Provide copies to Architect and District.

B. Accompany District and Architect on preliminary inspection to determine items to be listed for completion or correction in the Contractor's Correction Punch List for Contractor's comprehensive list of items to be completed or corrected.
   1. As authorized by the District; Architect and Architect's / District's consultants, as appropriate, will attend a meeting at the Project site to review Contract closeout procedures and to review the list of items to be completed and corrected (punch list) to make the Work ready for acceptance by the District.
   2. This meeting shall be scheduled not earlier than 14 days prior to the date anticipated for the Final Inspection review.

C. Notify Architect when work is considered ready for Architect's Substantial Completion inspection.

D. Submit written certification containing Contractor's Correction Punch List, that Contract Documents have been reviewed, work has been inspected, and that work is complete in accordance with Contract Documents and ready for Architect's Substantial Completion inspection.
   1. Final Application for Payment: In the Application for Payment that coincides with the date Final Inspection/Completion is claimed, show 100 percent completion for the portion of the Work claimed substantially complete.
   2. Warranties, Bonds and Certificates: Submit specific warranties, guarantees, workmanship bonds, maintenance agreements, final certifications and similar documents.
   3. Locks and Keys: Change temporary lock cylinders over to permanent keying and transmit keys to the District, unless otherwise directed or specified.
   4. Tests and Instructions: Complete start-up testing of systems, and instruction of the District's personnel. Remove temporary facilities from the site, along with construction tools, mock-ups, and similar elements.

E. Clearing and Cleaning: Prior to the Final Inspection review, Contractor shall conduct a thorough cleaning and clearing of the Project area, including removal of construction facilities and temporary controls.

F. Inspection and Testing: Prior to the Final Inspection review, complete inspection and testing required for the Work, including securing of approvals by authorities having jurisdiction.

1. Complete all inspections, tests, balancing, sterilization and cleaning of plumbing and HVAC systems.
2. Complete inspections and tests of electrical power and signal systems.

G. District will occupy all of the building as specified in Section 01 10 00.

H. Conduct Final inspection and create Final Correction Punch List containing Architect's and Contractor's comprehensive list of items identified to be completed or corrected and submit to Architect.

1. Correction (Punch) List: Contractor shall prepare and distribute at the preliminary Contract closeout review meeting, a typewritten, comprehensive list of items to be completed and corrected (punch list) to make the Work ready for acceptance by the District.
   a. Include all items to be completed or corrected prior to the Contractor's application for final payment.
   b. Identify items by location (room number or name) and consecutive number. For example, 307-5 would identify item 5 in Room 307, Roof-4 would identify item 4 on Roof.
   c. Prepare separate lists according to categories used for Drawings. For example, provide lists for Architectural, Structural, Plumbing, Mechanical, Electrical, Fire Protection, Civil, and Landscape.
   d. Architect, Architect's consultants and District's consultants, if in attendance, will conduct a brief walk-through of Project with the Contractor to review scope and adequacy of the punch list.
   e. Verbal comments will be made to the Contractor by the DSA, the Architect and the Architect's and District's consultants, if in attendance, during the walk-through. These comments will indicate generally the additions and corrections to be made to the punch list. Such comments shall not be considered to be comprehensive; Contractor shall use the comments as guidance in preparing the punch list for the Final Inspection review.
2. Final Inspection Meeting: On a date mutually agreed by the District, Architect, and Contractor, a meeting shall be conducted at the Project site to determine whether the Work is satisfactory and complete for filing a Notice of Completion.
   a. Contractor shall provide three working days notice to Architect for requested date of Final Inspection meeting.
   b. The District Representative, the Architect with Architect's / District's consultants, as authorized by the District, will attend the Final Inspection meeting.

c. In addition to conducting a walk-through of the facility and reviewing the punch list, the purpose of the meeting shall include submission of warranties, guarantees and bonds to the District, submission of operation and maintenance data (manuals), provision of specified extra materials to the District, and submission of other Contract closeout documents and materials as required and if not already submitted.

d. The District Representative, Architect and Architect's consultants, as appropriate, will conduct a walk-through of the facility with the Contractor and review the punch list.

e. Contractor shall correct the punch list and record additional items as may identified during the walk-through, including notations of corrective actions to be taken.

f. Retype the punch list and distribute it within three working days to those attending the meeting.

g. If additional site visits by the District Representative, the Architect and the Architect's and District's consultants are required to review completion and correction of the Work, the costs of additional visits shall be reimbursed to the District by the Contractor by deducting such costs from the Final Payment.

I. Correct items of work listed in Final Correction Punch List and comply with requirements for access to District-occupied areas.

J. Notify Architect when work is considered finally complete and ready for Architect's Final Inspection.

1. Architect's Certification of Completion:

a. When Architect determines that list of items to be completed and corrected (Punch List) is sufficiently complete for District to occupy Project for the use to which it is intended.

K. Complete items of work determined by Architect listed in executed Certificate of Substantial Completion.

3.16 FINAL PAYMENT

A. After completion of all items listed for completion and correction, after submission of all documents and products and after final cleaning, submit final Application for Payment, identifying total adjusted Contract Sum, previous payments and sum remaining due.

B. Payment will not be signed off by the Architect until the following are accomplished:

1. All Project Record Documents have been transferred and accepted by District.

2. All extra materials and maintenance stock have been transferred and received by District.

3. All warranty documents and operation and maintenance data have been received and accepted by District.

4. All liens have been released or bonded by Contractor.

5. Contractor's surety has consented to Final Payment.

6. All documentation required by DSA has been completed.

3.17 MAINTENANCE

A. Provide service and maintenance of components indicated in specification sections.

B. Maintenance Period: As indicated in specification sections or, if not indicated, not less than one year from the Date of Project Completion or the length of the specified warranty, whichever is longer.

C. Examine system components at a frequency consistent with reliable operation. Clean, adjust, and lubricate as required.

D. Include systematic examination, adjustment, and lubrication of components. Repair or replace parts whenever required. Use parts produced by the manufacturer of the original component.

E. Maintenance service shall not be assigned or transferred to any agent or subcontractor without prior written consent of the District.

END OF SECTION

SECTION 01 71 23
FIELD ENGINEERING

PART 1 GENERAL

1.01 SECTION INCLUDES

A. Field engineering services by Contractor.

1.02 DESCRIPTION OF SERVICES

A. Specific services listed in this section are in addition to, and do not supersede, general Execution and Closeout Requirements.

B. Sole responsibility for establishing all locations, dimensions and levels of items of work.

C. Sole responsibility for provision of all materials required to establish and maintain benchmarks and control points, including batter boards, grade stakes, structure, and pipeline elevation stakes, and other items.

D. Having a skilled instrument person(s) available on short notice when necessary for laying out the work.

E. Keeping a transit, theodolite, or TST (total station theodolite with electronic distance measurement device); leveling instrument; and related implements such as survey rods and other measurement devices, at the project site at all times.

F. Provision of facilities and assistance necessary for Architect to check lines and grade points placed by Contractor.

1. Performance of excavation or embankment work until after all cross-sectioning necessary for determining payment quantities for Unit Price work have been completed and accepted by Architect.

G. Preparation and maintenance of daily reports of activity on the work. Submission of reports containing key progress indicators and job conditions to Architect.

1. Number of employees at the Site.
2. Number employees at the Site for each of Contractor's subcontractors.
3. Breakdown of employees by trades.
4. Major equipment and materials installed as part of the work.
5. Major construction equipment utilized.
6. Location of areas in which construction was performed.
7. Materials and equipment received.
8. Work performed, including field quality control measures and testing.
9. Weather conditions.
10. Safety.
11. Delays encountered, amount of delay incurred, and the reasons for the delay.
12. Instructions received from Architect or District, if any.

H. Preparation and maintenance of professional-quality, accurate, well organized, legible notes of all measurements and calculations made while surveying and laying out the work.

I. Prior to backfilling operations, surveying - locating, and recording on a copy of Contract Documents - an accurate representation of buried work and Underground Facilities encountered.

J. Setting up and executing time-lapse photography of construction activities.

1.03 REFERENCE STANDARDS

A. State Plane Coordinate System for California.

1.04 ADMINISTRATIVE REQUIREMENTS

A. Preinstallation Meeting: Conduct a preinstallation meeting one week prior to the start of the work of this section; require attendance by all affected installers.

1.05 SUBMITTALS

A. See Section 01 30 00 - Administrative Requirements, for submittal procedures.

B. Submit in addition to items required in Section 01 70 00 - Execution and Closeout Requirements.

C. Informational Submittals: Submit the following:

1. Field Engineering: Submit daily reports, with content as indicated in this section.

   a. When requested by Architect, submit for Record documentation verifying accuracy of field engineering including, but not limited to, Contractor’s survey notes and field notes.

2. Final property survey.

1.06 QUALITY ASSURANCE

A. Field Engineer's Qualifications: As established in Section 01 70 00 - Execution and Closeout Requirements.

B. Use adequate number of skilled and thoroughly-trained workers to perform the work of this section in a timely and comprehensive manner.

C. Minimum accuracy for required work is as follows:

1. Grade: Horizontal Tolerance: Plus or minus 0.5 feet, Vertical Tolerance: Plus or minus 0.05 feet.

2. Culverts and ditches: Horizontal Tolerance: Plus or minus 0.5 feet, Vertical Tolerance: Plus or minus 0.05 feet.

3. Structures: Horizontal Tolerance: Plus or minus 0.5 feet (location), Vertical Tolerance: Plus or minus 0.05 feet.

PART 2 PRODUCTS - NOT USED

PART 3 EXECUTION

3.01 EXAMINATION

A. Verify layout information shown on Drawings, in relation to the property survey and existing benchmarks. Notify District's Representative and Architect of any discrepancies immediately in writing before proceeding to lay out the work. Locate and protect existing benchmarks and base line. Preserve permanent reference points during construction.

B. Existing Utilities and Equipment: The existence and location of underground and other utilities and construction indicated as existing are not guaranteed. Before beginning sitework, investigate and verify existing conditions.

3.02 FIELD ENGINEERING

A. Maintain field office files, drawings, specifications, and record documents.

B. Coordinate field engineering services with Contractor's subcontractors, installers, and suppliers as appropriate.

C. Prepare layout and coordination drawings for construction operations.

D. Check and coordinate the work for conflicts and interferences, and immediately advise Architect and District of all discrepancies of which Contractor is aware.

E. Cooperate as required with Architect and District in observing the work and performing field inspections.

F. Review and coordinate work on a regular basis with shop drawings and Contractor's other submittals.

G. In general, match existing adjacent grades and maintain existing flow lines.

H. Check the location, line and grade of every major element as the work progresses. Notify the Architect when deviations from required lines or grades exceed allowable tolerances. Include in such notifications a thorough explanation of the problem, and a proposed plan and schedule for remedying the deviation. Do not proceed with remedial work without District's concurrence of the remediation plan.

I. Check all formwork, reinforcing, inserts, structural steel, bolts, sleeves, piping, other materials and equipment for compliance with shop drawings and Contract Documents requirements.

J. Check all bracing and shoring for structural integrity and compliance with designs prepared by the Contractor.

3.03 CONSTRUCTION SURVEYING

A. General: Perform surveying as applicable to specific items necessary for proper execution of work.

1. Alignment Staking: Provide alignment stakes at 50 foot intervals on tangent, and at 25 foot intervals on curves.
2. Slope Staking: Provide slope staking at 50 foot intervals on tangent, and at 25 foot intervals on curves. Re-stake at every ten-foot difference in elevation.

3. Structure: Stake out structures, including elevations, and check prior to and during construction.
4. Pipelines: Stake out pipelines including elevations, and check prior to and during construction.
5. Site Utilities: Stake out utility lines including elevations, and check prior to and during construction.
6. Cross-sections: Provide original, intermediate, and final staking as required, for site work and other locations as necessary for quantity surveys.

B. Surveying to Determine Quantities for Payment.
1. For each application for progress payment, perform such surveys and computations necessary to determine quantities of work performed or placed. Perform surveys necessary for Architect to determine final quantities of work in place.
2. Notify Architect at least 24 hours before performing survey services for determining quantities. Unless waived in writing by Architect, perform quantity surveys in presence of Architect.

C. Record Log: Maintain a log of layout control work. Record any deviations from required lines and levels. Include beginning and ending dates and times of surveys, weather conditions, name and duty of each survey party member, and types of instruments and tapes used.

D. Use by the Architect: The Architect may at any time use line and grade points and markers established by the Contractor. The Contractor's surveys are a part of the work and may be checked by the Architect at any time.

E. Accuracy:
1. Establish Contractor's temporary survey references points for Contractor’s use to at least second-order accuracy (e.g., 1:10000). Set construction staking used as a guide for the work to at least third-order accuracy (e.g., 1:5000). Provide the absolute margin for error specified below on the basis established by such orders.
   a. Horizontal accuracy of easement staking: Plus or minus 0.1 feet.
   b. Accuracy of other staking shall be plus or minus 0.04 feet horizontally and plus or minus 0.02 feet vertically.
   c. Include an error analysis sufficient to demonstrate required accuracy in survey calculations.
2. District reserves the right to check the Contractor's survey, measurements, and calculations. The requirement for accuracy will not be waived, whether this right is exercised or not.

3.04 SUPPORT AND BRACING

A. General requirements: Design all support and bracing systems, if required. Provide for attachment to portions of the building structure capable of bearing the loads imposed. Design systems to not overstress the building structure.

B. Seismic Bracing: Design where required by authorities having jurisdiction.
1. Design and install all support systems to comply with the seismic requirements of the Construction Code of California.

2. Design and install seismic bracing so as not to defeat the operation on any required vibration isolation or sound isolation devices.

3.05 REPORTS

A. Submit two copies of Contractor's daily reports at Architect's field office (or electronically) by 9:00 AM the next working day after the day covered in the associated report. Daily report shall be signed by responsible member of Contractor's staff, such as project manager or superintendent, or foreman designated by Contractor as having authority to sign daily reports.

3.06 RECORDS

A. Maintain at the Site a complete and accurate log of control and survey work as it progresses.

1. Organize and record survey data in accordance with recognized professional surveying standards, Laws and Regulations, and prevailing standards of practice in California. Record Contractor's surveyor's original field notes, computations, and other surveying data in Contractor-furnished hard-bound field books. Contractor is solely responsible for completeness and accuracy of survey work, and completeness and accuracy of survey records, including field books. Survey records,(including field books) may be rejected by District due to failure to organize and maintain survey records in a manner that allows reasonable and independent verification of calculations, and/or allows identification of elevations, dimensions, and grades of the work.
2. Illegible notes or data, and erasures on any page of field books, are unacceptable. Do not submit copied notes or data. Corrections by ruling or lining out errors will be unacceptable unless initialed by the surveyor. Violation of these requirements may require re-surveying the data questioned by Architect.

B. Submit three copies of final property survey to District. Include on the survey a certification, signed by the surveyor, that principal metes, bounds, lines, and levels of the Project are accurately positioned as shown on the survey. Include the following information:

1. Structure locations from property lines, and distances to adjacent buildings.
2. Dimensions and locations of walks, underground utilities, and appurtenances.
3. Location of easements.
4. Final grading topographic survey.

3.07 CLOSEOUT ACTIVITIES

A. See Section 01 78 00 - Closeout Submittals, for closeout submittals.

B. See Section 01 79 00 - Demonstration and Training, for additional requirements.

END OF SECTION

SECTION 01 74 19
CONSTRUCTION WASTE MANAGEMENT AND DISPOSAL

PART 1 GENERAL

1.01 WASTE MANAGEMENT REQUIREMENTS

A. Comply with the requirements Section 5.408 of the California Green Building Standards Code.

1. Recycle and/or salvage for reuse a minimum of 65 percent of the nonhazardous construction and demolition waste in accordance with Section 504.8.1.1, 5.408.1.2, or 5.408.1.3; or meet a local construction and demolition waste management ordinance, whichever is more stringent.

B. District requires that this project generate the least amount of trash and waste possible.

C. Employ processes that ensure the generation of as little waste as possible due to error, poor planning, breakage, mishandling, contamination, or other factors.

D. Minimize trash/waste disposal in landfills; reuse, salvage, or recycle as much waste as economically feasible.

E. Required Recycling, Salvage, and Reuse: The following may not be disposed of in landfills or by incineration:

1. Aluminum and plastic beverage containers.
2. Corrugated cardboard.
3. Wood pallets.
4. Clean dimensional wood.
5. Land clearing debris, including brush, branches, logs, and stumps; see Section 31 10 00 - Site Clearing for use options.
   a. Comply with California Green Code (CGC) 5.408.3; Excavated soil and land clearing debris: 100 percent of trees, stumps, rocks and associated vegetation and soils resulting primarily from land clearing shall be reused or recycled.
      1) Exception: Reuse, either on-or off-site, of vegetation or soil contaminated by disease or pest infestation.
6. Concrete: May be crushed and used as riprap, aggregate, sub-base material, or fill.
7. Bricks: May be used on project if whole, or crushed and used as landscape cover, sub-base material, or fill.
8. Concrete masonry units: May be used on project if whole, or crushed and used as sub-base material or fill.
9. Asphalt paving: May be recycled into paving for project.
10. Metals, including packaging banding, metal studs, sheet metal, structural steel, piping, reinforcing bars, door frames, and other items made of steel, iron, galvanized steel, stainless steel, aluminum, copper, zinc, lead, brass, and bronze.
11. Glass.
12. Gypsum drywall and plaster.

13. Carpet, carpet cushion, carpet tile, and carpet remnants, both new and removed: DuPont (http://flooring.dupont.com) and Interface (www.interfaceinc.com) conduct reclamation programs.
14. Roofing.
15. Paint.
16. Plastic sheeting.
17. Rigid foam insulation.
18. Windows, doors, and door hardware.
19. Plumbing fixtures.
20. Mechanical and electrical equipment.
21. Fluorescent lamps (light bulbs).
22. Acoustical ceiling tile and panels.
23. Materials which could be hazardous and subject to special disposal regulations include but are not limited to the following: CalGreen Section 5.408.2
    a. Lead-Based Paint
    b. Asbestos: Found in older pipe insulation, asphalt floor tiles, linoleum, insulation, etc.
    c. Polychlorinated Biphenyls (PCBs):
        1) Found in electrical oil filled equipment manufactured prior to 1978 such as transformers, switches and fluorescent lamp ballasts.
        2) Also found in adhesive, sealant, caulk, glazing putty, roofing material, pesticide vehicle, ink, paper, fabric dye, gaskets, and hydraulic fluid.
    d. HVAC Refrigerants: Containing Fluorinated and Chlorinated compounds.
    e. Drinking Fountain Refrigerants: Containing Fluorinated and Chlorinated compounds.
    f. Fluorescent Light Tubes: Contain mercury.
    g. EXIT signs and Smoke Detectors: May contain unregulated, radioactive tritium. · Required to be returned to manufacturer.
    h. Contaminated Soils.
    i. Pressure Treated Lumber.

F. Contractor shall submit periodic Waste Disposal Reports; all landfill disposal, recycling, salvage, and reuse must be reported regardless of to whom the cost or savings accrues; use the same units of measure on all reports.
    1. Contractor's quantitative reports for construction waste materials as a condition of approval of progress payments.

G. Contractor shall develop and follow a Waste Management Plan designed to implement these requirements. CalGreen Section 5.408.1.1.
    1.

H. The following sources may be useful in developing the Waste Management Plan:
    1. California Recycling Department, at www.dgs.ca.gov/BSC/CALGreen.
    2. General information contacts regarding construction and demolition waste:

a. Directory of Wood-Framed Building Deconstruction and Reused Building Materials Companies: www.fpl.fs.fed.us/documnts/fplgtr/fpl_gtr150.pdf.

b. Additional resources to be developed by Contractor with assistance from District and **Contractor, as requested.**

3. Recycling Haulers and Markets: The source list below contains local haulers and markets for recyclable materials. This list is provided for information only and is not necessarily comprehensive; other haulers and markets are acceptable.

a. CAL-MAX: www.calrecycle.ca.gov/calmax/.

1) A free service designed to help businesses find markets for non-hazardous materials they have traditionally discarded.

b. General Recycling/Reuse Centers: For information on qualified local solid waste haulers contact the California Department of Resources Recycling and Recovery - CalRecycle. The website lists wastes recycling facilities in counties throughout the State of California.

1) www.calrecycle.ca.gov.

4. Recycling Economics Information: The above lists contain information that may be useful in estimating the costs or savings or recycling options.

I. Methods of trash/waste disposal that are not acceptable are:

1. Burning on the project site.
2. Burying on the project site.
3. Dumping or burying on other property, public or private.
4. Other illegal dumping or burying.
5. Incineration, either on- or off-site.

J. Regulatory Requirements: Contractor is responsible for knowing and complying with regulatory requirements, including but not limited to Federal, state and local requirements, pertaining to legal disposal of all construction and demolition waste materials.

1.02 RELATED REQUIREMENTS

A. Section 01 10 00 - Summary: List of items to be salvaged from the existing building for relocation in project or for District.

B. Section 01 30 00 - Administrative Requirements: Additional requirements for project meetings, reports, submittal procedures, and project documentation.

C. Section 01 50 00 - Temporary Facilities and Controls: Additional requirements related to trash/waste collection and removal facilities and services.

D. Section 01 60 00 - Product Requirements: Waste prevention requirements related to delivery, storage, and handling.

E. Section 01 70 00 - Execution and Closeout Requirements: Trash/waste prevention procedures related to demolition, cutting and patching, installation, protection, and cleaning.

F. Section 31 10 00 - Site Clearing: Handling and disposal of land clearing debris.

1.03 DEFINITIONS

A. Clean: Untreated and unpainted; not contaminated with oils, solvents, caulk, or the like.

B. Construction and Demolition Waste: Solid wastes typically including building materials, packaging, trash, debris, and rubble resulting from construction, remodeling, repair and demolition operations.
   1. Debris that is not hazardous as defined in CalGreen Section 5.408.2 and California Code of Regulations, Title 22, Section 66261.3 et seq.
   2. This term includes, but is not limited to, asphalt concrete, Portland cement concrete, brick, lumber, gypsum wallboard, cardboard and other associated packaging, roofing material, ceramic tile, carpeting, plastic pipe, and steel.
   3. The debris may be commingled with rock, soil, tree stumps, and other vegetative matter resulting from land clearing and landscaping for construction or land development projects.

C. Disposal: Removal off-site of demolition and construction waste and subsequent sale, recycling, reuse, or deposit in landfill or incinerator acceptable to authorities having jurisdiction.

D. Diversion: Avoidance of demolition and construction waste sent to landfill or incineration. Diversion does not include using materials for landfill, alternate daily cover on landfills, or materials used as fuel in waste-to-energy processes.

E. Enforcement Agency (EA). Enforcement agency as defined in CA Public Resources Code 40130.

F. Hazardous: Exhibiting the characteristics of hazardous substances, i.e., ignitibility, corrosivity, toxicity or reactivity.

G. Landfill, Inert waste or Inert Disposal Facility:
   1. A disposal facility that accepts only inert waste such as soil and rock, fully cured asphalt paving, uncontaminated concrete (including fiberglass or steel reinforcing rods embedded in the concrete), brick, glass, and ceramics, for land disposal.

H. Landfill, Class III:
   1. A landfill that accepts non-hazardous resources such as household, commercial, and industrial waste, resulting from construction, remodeling, repair, and demolition operations.
   2. A Class III landfill must have a solid waste facilities permit from the California Integrated Waste Management Board (CIWMB) and is regulated by the Enforcement Agency (EA).

I. Mixed Debris: Loads that include commingled recyclable and non-recyclable materials generated at the construction site.

J. Mixed Debris Recycling Facility: A processing facility that accepts loads of commingled construction and demolition debris for the purpose of recovering re-usable and recyclable materials and disposing the non-recyclable residual materials.

K. Nonhazardous: Exhibiting none of the characteristics of hazardous substances, i.e., ignitibility, corrosivity, toxicity, or reactivity.

L. Nontoxic: Neither immediately poisonous to humans nor poisonous after a long period of exposure.

M. Recyclable: The ability of a product or material to be recovered at the end of its life cycle and remanufactured into a new product for reuse by others.

N. Recycle: To remove a waste material from the project site to another site for remanufacture into a new product for reuse by others.

O. Recycling: The process of sorting, cleansing, treating and reconstituting solid waste and other discarded materials for the purpose of using the altered form. Recycling does not include burning, incinerating, or thermally destroying waste.

P. Recycling Center: A facility that receives only C&D material that has been separated for reuse prior to receipt, in which the residual (disposed) amount of waste in the material is less than 10% of the amount separated for reuse by weight.

Q. Return: To give back reusable items or unused products to vendors for credit.

R. Reuse: To reuse a construction waste material in some manner on the project site.

S. Salvage: To remove a waste material from the project site to another site for resale or reuse by others.

T. Sediment: Soil and other debris that has been eroded and transported by storm or well production run-off water.

U. Separated for Reuse:

1. Materials, including commingled recyclables.
2. Separated or kept separate from the solid waste stream for the purpose of:
   a. Additional sorting or processing those materials for reuse or recycling.
      1) In order to return them to the economic mainstream in the form of raw material for new, reused, or reconstituted products.
   b. Products shall meet the quality standards necessary to be used in the marketplace.
   c. Includes materials that have been “source separated”.

V. Solid Waste:

1. All putrescible and nonputrescible solid, semisolid, and liquid wastes, including:
   a. Garbage, trash, refuse, paper, rubbish, ashes, industrial wastes, demolition and construction wastes.
   b. Abandoned vehicles and parts thereof.
   c. Discarded home and industrial appliances.
   d. Dewatered, treated, or chemically fixed sewage sludge which is not hazardous waste.
   e. Manure, vegetable or animal solid and semisolid wastes.
   f. Other discarded solid and semisolid wastes.
2. "Solid waste" does not include hazardous waste, radioactive waste, or medical waste as defined or regulated by State law.

W. Source Separation: The act of keeping different types of waste materials separate beginning from the first time they become waste.

1. Materials, including commingled recyclables, that have been separated or kept separate from the solid waste stream at the point of generation, for the purpose of additional sorting or processing of those materials for reuse or recycling in order to return them to the economic mainstream in the form of raw materials for new, reused, or reconstituted products which meet the quality standards necessary to be used in the marketplace.

X. Toxic: Poisonous to humans either immediately or after a long period of exposure.

Y. Trash: Any product or material unable to be reused, returned, recycled, or salvaged.

Z. Waste: Extra material or material that has reached the end of its useful life in its intended use. Waste includes salvageable, returnable, recyclable, and reusable material.

AA. Waste Hauler: A company that possesses a valid permit from the local waste management authority to collect and transport solid wastes from individuals or businesses for the purpose of recycling or disposal in the locality.

1.04 SUBMITTALS

A. See Section 01 30 00 - Administrative Requirements, for submittal procedures.

B. Submit Waste Management Plan within 30 calendar days after receipt of Notice to Proceed, or prior to any trash or waste removal, whichever occurs sooner; submit projection of all trash and waste that will require disposal and alternatives to landfilling.

1. Submit four copies of CWMP for review.

a. Contractor's Construction Waste and Recycling Plan must be approved by the Architect and Construction Manager prior to the start of Work.

2. Approval of the Contractor's CWMP shall not relieve the Contractor of responsibility for adequate and continuing control of pollutants and other environmental protection measures.

C. Waste Management Plan: Include the following information:

1. Analysis of the trash and waste projected to be generated during the entire project construction cycle, including types and quantities.

2. Landfill Options: The name, address, and telephone number of the landfill(s) where trash/waste will be disposed of, the applicable landfill tipping fee(s), and the projected cost of disposing of all project trash/waste in the landfill(s).

3. Landfill Alternatives: List all waste materials that will be diverted from landfills by reuse, salvage, or recycling.

a. List each material proposed to be salvaged, reused, or recycled.

b. List the local market for each material.

c. State the estimated net cost, versus landfill disposal.

4. Meetings: Describe regular meetings to be held to address waste prevention, reduction, recycling, salvage, reuse, and disposal.

5. Materials Handling Procedures: Describe the means by which materials to be diverted from landfills will be protected from contamination and prepared for acceptance by designated facilities; include separation procedures for recyclables, storage, and packaging.

6. Transportation: Identify the destination and means of transportation of materials to be recycled; i.e. whether materials will be site-separated and self-hauled to designated centers, or whether mixed materials will be collected by a waste hauler.

7. Recycling Incentives: Describe procedures required to obtain credits, rebates, or similar incentives.

D. Waste Disposal Reports: Submit at specified intervals, with details of quantities of trash and waste, means of disposal or reuse, and costs; show both totals to date and since last report.

1. Submit updated Report with each Application for Progress Payment; failure to submit Report will delay payment.
    a. Inert materials shall achieve a construction waste diversion rate of at least 95 percent.
        1) These materials include, but are not limited to, concrete, asphalt and rock.
        2) Earthwork is not included.
        3) Excavated soil shall not be included in any of the calculations used to ensure compliance with this specification section.
    b. The overall diversion rate must be based on weight.
    c. The diversion rate of individual materials can be measured in either weight or volume, but the rate shall be converted into the units selected for calculating the overall diversion rate.
        1) All individual material diversions must be converted to a consistent set of units when calculating the overall diversion rate for the all reports and submittals required for the Work.
    d. Base conversion rate numbers on standard conversion rate data for construction projects provided by the California Integrated Waste Management Board (CIWMB). This data is available at the following internet location, www.calrecycle.ca.gov/LGCentral/Library/Guidance.
2. Submit Report on a form acceptable to District.
3. Landfill Disposal: Include the following information:
    a. Identification of material.
    b. Amount, in tons or cubic yards, of trash/waste material from the project disposed of in landfills.
    c. State the identity of landfills, total amount of tipping fees paid to landfill, and total disposal cost.
    d. Include manifests, weight tickets, receipts, and invoices as evidence of quantity and cost.
4. Recycled and Salvaged Materials: Include the following information for each:
    a. Identification of material, including those retrieved by installer for use on other projects.
    b. Amount, in tons or cubic yards, date removed from the project site, and receiving party.
    c. Transportation cost, amount paid or received for the material, and the net total cost or savings of salvage or recycling each material.
    d. Include manifests, weight tickets, receipts, and invoices as evidence of quantity and cost.
    e. Certification by receiving party that materials will not be disposed of in landfills or by incineration.

5. Material Reused on Project: Include the following information for each:
   a. Identification of material and how it was used in the project.
   b. Amount, in tons or cubic yards.
   c. Include weight tickets as evidence of quantity.
6. Other Disposal Methods: Include information similar to that described above, as appropriate to disposal method.

PART 2 PRODUCTS

2.01 PRODUCT SUBSTITUTIONS

A. See Section 01 60 00 - Product Requirements for substitution submission procedures.

B. For each proposed product substitution, submit the following information in addition to requirements specified in Section 01 60 00:
   1. Relative amount of waste produced, compared to specified product.
   2. Cost savings on waste disposal, compared to specified product, to be deducted from the Contract Sum.
   3. Proposed disposal method for waste product.
   4. Markets for recycled waste product.

PART 3 EXECUTION

3.01 WASTE MANAGEMENT PROCEDURES

A. See Section 01 30 00 for additional requirements for project meetings, reports, submittal procedures, and project documentation.

B. See Section 01 50 00 for additional requirements related to trash/waste collection and removal facilities and services.

C. See Section 01 60 00 for waste prevention requirements related to delivery, storage, and handling.

D. See Section 01 70 00 for trash/waste prevention procedures related to demolition, cutting and patching, installation, protection, and cleaning.

3.02 WASTE MANAGEMENT PLAN IMPLEMENTATION

A. Manager: Designate an on-site person or persons responsible for instructing workers and overseeing and documenting results of the Waste Management Plan.

B. Communication: Distribute copies of the Waste Management Plan to job site foreman, each subcontractor, District, and Architect.

C. Instruction: Provide on-site instruction of appropriate separation, handling, and recycling, salvage, reuse, and return methods to be used by all parties at the appropriate stages of the project.

D. Meetings: Discuss trash/waste management goals and issues at project meetings.
   1. Prebid meeting.
   2. Preconstruction meeting.

3. Regular job-site meetings.

E. Facilities: Provide specific facilities for separation and storage of materials for recycling, salvage, reuse, return, and trash disposal, for use by all contractors and installers.

1. As a minimum, provide:

a. Separate area for storage of materials to be reused on-site, such as wood cut-offs for blocking.

b. Separate dumpsters for each category of recyclable.

c. Recycling bins at worker lunch area.

2. Provide containers as required.

3. Provide temporary enclosures around piles of separated materials to be recycled or salvaged.

4. Provide materials for barriers and enclosures that are nonhazardous, recyclable, or reusable to the maximum extent possible; reuse project construction waste materials if possible.

5. Locate enclosures out of the way of construction traffic.

6. Provide adequate space for pick-up and delivery and convenience to subcontractors.

7. If an enclosed area is not provided, clearly lay out and label a specific area on-site.

8. Keep recycling and trash/waste bin areas neat and clean and clearly marked in order to avoid contamination of materials.

F. Hazardous Wastes: Separate, store, and dispose of hazardous wastes according to applicable regulations.

G. Recycling: Separate, store, protect, and handle at the site identified recyclable waste products in order to prevent contamination of materials and to maximize recyclability of identified materials. Arrange for timely pickups from the site or deliveries to recycling facility in order to prevent contamination of recyclable materials.

H. Reuse of Materials On-Site: Set aside, sort, and protect separated products in preparation for reuse.

I. Salvage: Set aside, sort, and protect products to be salvaged for reuse off-site.

3.03 DISPOSAL OPERATIONS AND WASTE HAULING

A. Remove waste materials from Project Site and legally dispose of them in a landfill or incinerator acceptable to authorities having jurisdiction.

1. Except for items or materials to be salvaged, recycled, or otherwise reused.

2. Except as otherwise specified, do not allow waste materials that are to be disposed of to accumulate on site.

3. Use a permitted waste hauler or Contractor's trucking services and personnel. To confirm valid permitted status of waste haulers, contact the local solid waste authority.

4. Become familiar with the conditions for acceptance of new construction, excavation and demolition materials at recycling facilities, prior to delivering materials.

5. Deliver to facilities that can legally accept new construction, excavation and demolition materials for purpose of re-use, recycling, composting, or disposal.

6. Remove and transport debris in a manner that will prevent spillage on adjacent surfaces and areas.
7. Do not burn or bury waste materials on or off site. Appropriate on-site topical application of ground gypsum or wood, or use of site paving as granulated fill is considered reuse, not waste.

3.04 PLAN AND REPORT FORMS

A. See suggested forms on the following pages.

END OF SECTION

CONTRACTOR'S CONSTRUCTION WASTE AND RECYCLING PLAN

(Submit After Award of Contract and Prior to Start of Work)

Project Title:		
Contract or Work Order No.:		
Contractor's Name:		
Street Address:		
City:	State:	Zip:
Phone: ( )	Fax: ( )	
E-Mail Address:		
Prepared by: (Print Name)		

Date Submitted:			
Project Period:		From:	TO:

Reuse, Recycling or Disposal Processes To Be Used

Describe the types of recycling processes or disposal activities that will be used for material generated in the project. Indicate the type of process or activity by number, types of materials, and estimated quantities that will be recycled or disposed in the sections below:

01 - Reuse of building materials or salvage items on site (i.e. crushed base or red clay brick)
02 - Salvaging building materials or salvage items at an offsite salvage or re-use center (i.e. lighting, fixtures)
03 - Recycling source separated materials on site (i.e. crushing asphalt/concrete for reuse or grinding for mulch)
04 - Recycling source separated materials at an offsite recycling center (i.e. scrap metal or green materials)
05 - Recycling commingled loads of C&D materials at an offsite mixed debris recycling center or transfer station
06 - Recycling material as Alternative Daily Cover at landfills
07 - Delivery of soils or mixed inerts to an inert landfill for disposal (inert fill).
08 - Disposal at a landfill or transfer station.
09 - Other (please describe) _____

Types of Material To Be Generated

Use these codes to indicate the types of material that will be generated on the project

A = Asphalt	C = Concrete	M = Metals	I = Mixed Inert	G = Green Materials
D = Drywall	P/C=Paper/Cardboard	W/C = Wire/Cable	S= Soils (Non Hazardous)	
M/C = Miscellaneous Construction Debris		R = Reuse/Salvage	W = Wood	O = Other (describe)

Facilities Used: Provide Name of Facility and Location (City)
Total Truck Loads: Provide Number of Trucks Hauled from Site During Reporting Period
Total Quantities: If scales are available at sites, report in tons. If not, quantify by cubic yards. For salvage/reuse items, quantify by estimated weight (or units).

SECTION I - RE-USED/RECYCLED MATERIALS

Include all recycling activities for source separated or mixed material recycling centers where recycling will occur.

Type of Material	Type of Activity	Facility to be Used/Location	Total Truck Loads	Total Quantities		
				Tons	Cubic YD	Other Wt.
(ex.) M	04	ABC Metals, Los Angeles	24	355		
a. Total Diversion						

CONTRACTOR'S CONSTRUCTION WASTE AND RECYCLING PLAN

Continued

SECTION II - DISPOSED MATERIALS						
Include all disposal activities for landfills, transfer stations, or inert landfills where no recycling will occur.						
				Total Quantities		
Type of Material	Type of Activity	Facility to be Used/Location	Total Truck Loads	Tons	Cubic YD	Other Wt.
(ex.) D	08	DEF Landfill, Los Angeles	2	35		
b. Total Disposal				0	0	0

SECTION III - TOTAL MATERIALS GENERATED			
This section calculates the total materials to be generated during the project period (Reuse/Recycle + Disposal = Generation			
	Tons	Cubic YD	Other Wt.
a. Total Reused/Recycled	0	0	0
b. Total Disposed	0	0	0
c. Total Generated	0	0	0

SECTION IV - CONTRACTOR'S LANDFILL DIVERSION RATE CALCULATION			
Add totals from Section I + Section II			
	Tons	Cubic YD	Other Wt.
a. Materials Re-Used and Recycled	0		
b. Materials Disposed	0		
c. Total Materials Generated (a. + b. = c.)	0	0	0
d. Landfill Diversion Rate (Tonnage Only)*			

* Use tons only to calculate recycling percentages: Tons Reused/Recycled/Tons Generated = % Recycled

Contractor's Comments (Provide any additional information pertinent to planned reuse, recycling, or disposal activities):

Notes:

1. Suggested Conversion Factors: From Cubic Yards to Tons (Use when scales are not available)
   a. Asphalt: .61 (ex. 1000 CY Asphalt = 610 tons. Applies to broken chunks of asphalt)
   b. Concrete: .93 (ex. 1000 CY Concrete = 930 tons. Applies to broken chunks of concrete)
   c. Ferrous Metals: .22 (ex. 1000 CY Ferrous Metal = 220 tons)
   d. Non-Ferrous Metals: .10 (ex. 1000 CY Non-Ferrous Metals = 100 tons)
   e. Drywall Scrap: .20
   f. Wood Scrap: .16

CONTRACTOR'S REUSE, RECYCLING, AND DISPOSAL REPORT

(Submit With Each Progress Payment)

Project Title:		
Contract or Work Order No.:		
Contractor's Name:		
Street Address:		
City:	State:	Zip:
Phone: ( )	Fax: ( )	
E-Mail Address:		
Prepared by: (Print Name)		

Date Submitted:			
Project Period:		From:	TO:

Reuse, Recycling or Disposal Processes to Be Used

Describe the types of recycling processes or disposal activities that will be used for material generated in the project. Indicate the type of process or activity by number, types of materials, and estimated quantities that will be recycled or disposed in the sections below:

01 - Reuse of building materials or salvage items on site (i.e. crushed base or red clay brick)
02 - Salvaging building materials or salvage items at an offsite salvage or re-use center (i.e. lighting, fixtures)
03 - Recycling source separated materials on site (i.e. crushing asphalt/concrete for reuse or grinding for mulch)
04 - Recycling source separated materials at an offsite recycling center (i.e. scrap metal or green materials)
05 - Recycling commingled loads of C&D materials at an offsite mixed debris recycling center or transfer station
06 - Recycling material as Alternative Daily Cover at landfills
07 - Delivery of soils or mixed inerts to an inert landfill for disposal (inert fill).
08 - Disposal at a landfill or transfer station.
09 - Other (please describe) _____

Types of Material To Be Generated

Use these codes to indicate the types of material that will be generated on the project

A = Asphalt	C = Concrete	M = Metals	I = Mixed Inert	G = Green Materials
D = Drywall	P/C=Paper/Cardboard	W/C = Wire/Cable	S= Soils (Non-Hazardous)	
M/C = Miscellaneous Construction Debris		R = Reuse/Salvage	W = Wood	O = Other (describe)

Facilities Used: Provide Name of Facility and Location (City)
Total Truck Loads: Provide Number of Trucks Hauled from Site During Reporting Period

Total Quantities: If scales are available at sites, report in tons. If not, quantify by cubic yards. For salvage/reuse items, quantify by estimated weight (or units).

SECTION I - RE-USED/RECYCLED MATERIALS

Include all recycling activities for source separated or mixed material recycling centers where recycling will occur.

Type of Material	Type of Activity	Facility to be Used/Location	Total Truck Loads	Total Quantities		
				Tons	Cubic YD	Other Wt.
(ex.) M	04	ABC Metals, Los Angeles	24	355		
a. Total Diversion						

CONTRACTOR'S REUSE, RECYCLING, AND DISPOSAL REPORT

Continued

SECTION II - DISPOSED MATERIALS						
Include all disposal activities for landfills, transfer stations, or inert landfills where no recycling will occur.						
				Total Quantities		
Type of Material	Type of Activity	Facility to be Used/Location	Total Truck Loads	Tons	Cubic YD	Other Wt.
(ex.) D	08	DEF Landfill, Los Angeles	2	35		
b. Total Disposal						

SECTION III - TOTAL MATERIALS GENERATED			
This section calculates the total materials to be generated during the project period (Reuse/Recycle + Disposal = Generation			
	Tons	Cubic YD	Other Wt.
a. Total Reused/Recycled			
b. Total Disposed			
c. Total Generated			

SECTION IV - CONTRACTOR'S LANDFILL DIVERSION RATE CALCULATION			
Add totals from Section I + Section II			
	Tons	Cubic YD	Other Wt.
a. Materials Re-Used and Recycled			
b. Materials Disposed			
c. Total Materials Generated (a. + b. = c.)			
d. Landfill Diversion Rate (Tonnage Only)*			

* Use tons only to calculate recycling percentages: Tons Reused/Recycled/Tons Generated = % Recycled

Contractor's Comments (Provide any additional information pertinent to planned reuse, recycling, or disposal activities):

Notes:

1. Suggested Conversion Factors: From Cubic Yards to Tons (Use when scales are not available)
   a. Asphalt: .61 (ex. 1000 CY Asphalt = 610 tons. Applies to broken chunks of asphalt)
   b. Concrete: .93 (ex. 1000 CY Concrete = 930 tons. Applies to broken chunks of concrete)
   c. Ferrous Metals: .22 (ex. 1000 CY Ferrous Metal = 220 tons)
   d. Non-Ferrous Metals: .10 (ex. 1000 CY Non-Ferrous Metals = 100 tons)
   e. Drywall Scrap: .20
   f. Wood Scrap: .16

SECTION 01 78 00
CLOSEOUT SUBMITTALS

PART 1 GENERAL

1.01 SECTION INCLUDES

A. Project record documents.

B. Operation and maintenance data.

C. Warranties and bonds.

1.02 RELATED REQUIREMENTS

A. District issued Bidding Instructions and Contract General Conditions: Performance bond and labor and material payment bonds, warranty, and correction of work.

B. Section 01 30 00 - Administrative Requirements: Submittals procedures, shop drawings, product data, and samples.

C. Section 01 45 33 - Code-Required Special Inspections and Procedures: Construction oversight procedures by DSA regarding the execution, approval, and closeout of this building project.

D. Section 01 70 00 - Execution and Closeout Requirements: Contract closeout procedures.

E. Section 017839: Detailed requirements.

F. Individual Product Sections: Specific requirements for operation and maintenance data.

G. Individual Product Sections: Warranties required for specific products or Work.

1. Special Project warranty requirements for specific products or elements of the Work; commitments and agreements for continuing services to District.

1.03 DEFINITIONS

A. Warranty: Assurance to District by Contractor, installer, supplier, manufacturer or other party responsible as warrantor, for the quantity, quality, performance and other representations of a product, system service of the Work, in whole or in part, for the duration of the specified period of time.

B. Guarantee: Assurance to District by Contractor or product manufacturer or other specified party, as guarantor, that the specified warranty will be fulfilled by the guarantor in the event of default by the warrantor.

C. Standard Product Warranty: Preprinted, written warranty published by product manufacturer for particular products and specifically endorsed by the manufacturer to the District.

D. Special Project Warranty: Written warranty required by or incorporated into Contract Documents, to extend time limits provided by standard warranty or to provide greater rights for District.

E. Correction Period: As defined in the Conditions of the Contract, Correction Period shall be synonymous with "warranty period", "guarantee period" and similar terms used in the Contract Specifications.

1.04 SUBMITTALS

A. Advance Submittals: For equipment and systems, or component parts of systems, put into service during construction and operated by District, submit documents within ten days of start of operation by District.

B. Final Completion Submittals: Prior to application for final payment, Contractor shall submit 3 copies the following:

1. Agency Document Submittals: Submit to District all documents required by authorities having jurisdiction, including serving utilities and other agencies. Submit original versions of all permit cards, with final sign-off by inspectors. Submit all certifications of inspections and tests.
   a. Complete all required Contractor forms and obtain DSA approval of these same forms. Comply with "Final Certification of Construction" per Title 24 Part 1 section 4-339.
      1) Form-6.C: Verified Report – Contractor: From each Contractor having a contract with the District.
2. Final Specifications Submittals: Submit to District all documents and products required by Specifications to be submitted, including the following:
   a. Project record drawings and specifications.
   b. Operating and maintenance data.
   c. Guarantees, warranties and bonds.
   d. Keys and keying schedule.
   e. Spare parts and extra stock.
   f. Test reports and certificates of compliance.
3. Certificates of Compliance and Test Report Submittals: Submit to District certificates and reports as specified and as required by authorities having jurisdiction, including the following:
   a. Sterilization of water systems.
   b. Sanitary sewer system tests.
   c. Gas system tests.
   d. Lighting, power and signal system tests.
   e. Ventilation equipment and air balance tests.
   f. Fire sprinkler system tests.
   g. Fire detection system, smoke alarms and dampers.
   h. Roofing inspections and tests.
4. Lien and Bonding Company Releases: Submit to District, with copy to Architect, evidence of satisfaction of encumbrances on Project by completion and submission of The American Institute of Architects Forms:
   a. G706 - Contractor's Affidavit of Payment of Debts and Claims;
   b. G706A - Contractor's Affidavit of Release of Liens;
   c. (if applicable) G707 - Consent of Surety;
   d. or forms as as agreed to by the District.
   e. Comply also with other requirements of District, as directed.
   f. All signatures shall be notarized.

5. Subcontractor List: Submit to two copies to District and two copies to Architect of updated Subcontractor and Materials Supplier List.
6. Warranty Documents: Prepare and submit to District all warranties and bonds as specified in Contract General Conditions and this Section.

C. Project Record Documents: Submit final progress markup PDF documents by uploading via Bluebeam to Architect with claim for final Application for Payment.

D. Operation and Maintenance Data:
1. Submit two copies of preliminary draft or proposed formats and outlines of contents before start of Work. Architect will review draft and return one copy with comments.
2. For equipment, or component parts of equipment put into service during construction and operated by District, submit completed documents within ten days after acceptance.
3. Submit one copy of completed documents 15 days prior to final inspection. This copy will be reviewed and returned after final inspection, with Architect comments. Revise content of all document sets as required prior to final submission.
4. Submit two sets of revised final documents in final form within 10 days after final inspection.

E. Warranties and Bonds:
1. For equipment or component parts of equipment put into service during construction with District's permission, submit documents within 10 days after acceptance.
2. Make other submittals within 10 days after Date of Final Inspection, prior to final Application for Payment.
3. For items of Work for which acceptance is delayed beyond Date of Final Inspection, submit within 10 days after acceptance, listing the date of acceptance as the beginning of the warranty period.

PART 2 PRODUCTS - NOT USED

PART 3 EXECUTION

3.01 PROJECT RECORD DOCUMENTS

A. See also Section 017839.

B. Record Documents are to be maintained and submitted in searchable live electronic format (PDF), unflattened.
1. Develop in compliance with Section 01 30 00 - Administrative Requirements.
2. Acceptable markup software:
a. Adobe Acrobat Professional.
b. Bluebeam Revu.

C. Maintain on site one set of the following record documents; record actual revisions to the Work:
1. Contract Drawings.
2. Project Manual with Specifications.

3. Addenda.
4. Change Orders and other modifications to the Contract.
5. Reviewed shop drawings, product data, and samples.
6. Manufacturer's instruction for assembly, installation, and adjusting.

D. Ensure entries are complete and accurate, enabling future reference by District.

E. Store record documents separate from documents used for construction.

F. Record information concurrent with construction progress.

G. Specifications: Legibly mark and record at each product section description of actual products installed, including the following:
   1. Manufacturer's name and product model and number.
   2. Product substitutions or alternates utilized.
   3. Changes made by Addenda and modifications.
   4. Provide copies of all approved addenda, directives, corrections, and change orders affecting the associated project.
      a. These copies shall be included with the "Bid Set" and/or "Record Set" listed above and formatted as detailed above.

H. Record Drawingsand Shop Drawings: Legibly mark each item to record actual construction including:
   1. Reproducible (PDF) set of Contract Drawings will be provided to Contractor by District through Architect or District Representative.
   2. Measured depths of foundations in relation to finish first floor datum.
   3. Measured horizontal and vertical locations of underground utilities and appurtenances, referenced to permanent surface improvements.
   4. Measured locations of internal utilities and appurtenances concealed in construction, referenced to visible and accessible features of the Work.
   5. Field changes of dimension and detail.
   6. Details not on original Contract drawings.
      a. Application of copies of details produced and provided by Architect during construction will be accepted.
   7. Sketches, clarifications (RFI's), Field Orders, Supplemental Instructions, Construction Change Documents, and Approved Change Orders

I. Submission: Submit by uploading, Record Documents to Architect prior to each Application for Payment.
   1. Provide, by email, to the Architect, a download link the Record Documents consisting of an unflattened PDF format with live text and redline mark-ups, not scanned.
   2. Maintain one additional paper copy and one in PDF format (on CD) of the fire suppression and fire protection detection system drawings and specifications at the building premises.
      a. One copy is to be kept on site for a period of three years to comply with CFC section 901.6.2.

3.02 OPERATION AND MAINTENANCE DATA

A. Source Data: For each product or system, list names, addresses and telephone numbers of Subcontractors and suppliers, including local source of supplies and replacement parts.

B. Product Data: Mark each sheet to clearly identify specific products and component parts, and data applicable to installation. Delete inapplicable information.

C. Drawings: Supplement product data to illustrate relations of component parts of equipment and systems, to show control and flow diagrams. Do not use Project Record Documents as maintenance drawings.

D. Typed Text: As required to supplement product data. Provide logical sequence of instructions for each procedure, incorporating manufacturer's instructions.

3.03 OPERATION AND MAINTENANCE DATA FOR MATERIALS AND FINISHES

A. For Each Product, Applied Material, and Finish:

1. Product data, with catalog number, size, composition, and color and texture designations.
2. Information for re-ordering custom manufactured products.

B. Instructions for Care and Maintenance: Manufacturer's recommendations for cleaning agents and methods, precautions against detrimental cleaning agents and methods, and recommended schedule for cleaning and maintenance.

C. Moisture protection and weather-exposed products: Include product data listing applicable reference standards, chemical composition, and details of installation. Provide recommendations for inspections, maintenance, and repair.

D. Additional information as specified in individual product specification sections.

E. Where additional instructions are required, beyond the manufacturer's standard printed instructions, have instructions prepared by personnel experienced in the operation and maintenance of the specific products.

3.04 OPERATION AND MAINTENANCE DATA FOR EQUIPMENT AND SYSTEMS

A. For Each Item of Equipment and Each System:

1. Description of unit or system, and component parts.
2. Identify function, normal operating characteristics, and limiting conditions.
3. Include performance curves, with engineering data and tests.
4. Complete nomenclature and model number of replaceable parts.

B. Where additional instructions are required, beyond the manufacturer's standard printed instructions, have instructions prepared by personnel experienced in the operation and maintenance of the specific products.

C. Panelboard Circuit Directories: Provide electrical service characteristics, controls, and communications; by label machine.

D. Include color coded wiring diagrams as installed.

E. Operating Procedures: Include start-up, break-in, and routine normal operating instructions and sequences. Include regulation, control, stopping, shut-down, and emergency instructions. Include summer, winter, and any special operating instructions.

F. Maintenance Requirements: Include routine procedures and guide for preventative maintenance and trouble shooting; disassembly, repair, and reassembly instructions; and alignment, adjusting, balancing, and checking instructions.
   1. Include HVAC outdoor and exhaust air damper calibration strategy.
      a. Include provisions which ensure that full closure of dampers can be achieved.
   2. Include Carbon Dioxide Monitoring Protocol.

G. Provide servicing and lubrication schedule, and list of lubricants required.

H. Include manufacturer's printed operation and maintenance instructions.

I. Include sequence of operation by controls manufacturer.

J. Provide original manufacturer's parts list, illustrations, assembly drawings, and diagrams required for maintenance.

K. Provide control diagrams by controls manufacturer as installed.

L. Provide Contractor's coordination drawings, with color coded piping diagrams as installed.

M. Provide charts of valve tag numbers, with location and function of each valve, keyed to flow and control diagrams.

N. Provide list of original manufacturer's spare parts, current prices, and recommended quantities to be maintained in storage.
   1. Parts Data:
      a. Provide original manufacturer's parts list, illustrations, assembly drawings, and diagrams as necessary for service and maintenance.
      b. Include complete nomenclature and catalog numbers for consumable and replacement parts.
      c. Provide list of original manufacturer's spare parts, current prices, and recommended quantities to be maintained in stock by the District or operator.

O. Include test and balancing reports.

P. Additional Requirements: As specified in individual product specification sections.

3.05 ASSEMBLY OF OPERATION AND MAINTENANCE MANUALS

A. Assemble operation and maintenance data into durable manuals for District's personnel use, with data arranged in the same sequence as, and identified by, the specification sections.
   1. Provide duplicate electronic formatted (PDF) versions of the O&M binder for record purposes. Organize the same as the printed versions.

B. Where systems involve more than one specification section, provide separate tabbed divider for each system.

C. Binders: Commercial quality, 8-1/2 by 11 inch three D side ring binders with durable plastic covers; 2 inch maximum ring size. When multiple binders are used, correlate data into related consistent groupings.

D. Cover: Identify each binder with typed or printed title OPERATION AND MAINTENANCE INSTRUCTIONS; identify title of Project; identify subject matter of contents.

E. Project Directory: Title and address of Project; names, addresses, and telephone numbers of Architect, Consultants, Contractor and subcontractors, with names of responsible parties.

F. Tables of Contents: List every item separated by a divider, using the same identification as on the divider tab; where multiple volumes are required, include all volumes Tables of Contents in each volume, with the current volume clearly identified.

G. Dividers: Provide tabbed dividers for each separate product and system; identify the contents on the divider tab; immediately following the divider tab include a description of product and major component parts of equipment.

H. Text: Manufacturer's printed data, or typewritten data on 20 pound paper.

I. Drawings: Provide with reinforced punched binder tab. Bind in with text; fold larger drawings to size of text pages.

J. Arrangement of Contents: Organize each volume in parts as follows:

1. Project Directory.
2. Table of Contents, of all volumes, and of this volume.
3. Operation and Maintenance Data: Arranged by system, then by product category.
   a. Source data.
   b. Product data, shop drawings, and other submittals.
   c. Operation and maintenance data.
   d. Field quality control data.
   e. Photocopies of warranties and bonds.
4. Design Data: To allow for addition of design data furnished by Architect or others, provide a tab labeled "Design Data" and provide a binder large enough to allow for insertion of at least 20 pages of typed text.

3.06 WARRANTIES AND BONDS

A. General:

1. Provide all warranties and guarantees with District named as beneficiary.
2. For equipment and products, or components thereof, bearing a manufacturer's warranty or guarantee that extends for a period of time beyond the Contractor's warranty and guarantee, so state in the warranty or guarantee.

B. General Warranty and Guarantee Requirements:

1. Warranty shall be an agreement to repair or replace, without cost and undue hardship to District, Work performed under the Contract which is found to be defective during the Correction Period (warranty or guarantee) period.
2. Repairs and replacements due to improper maintenance or operation, or due to normal wear, usage and weathering are excluded from warranty requirements unless otherwise specified.

C. Provisions for Special Warranties: Refer to Conditions of the Contract for terms of the Contractor's special warranty of workmanship and materials.

D. Specific Warranty and Guarantee Requirements: Specific requirements are included in product Specifications Technical Sections, including content and limitations.

E. Disclaimers and Limitations:

1. Manufacturer's disclaimers and limitations on product warranties and guarantees shall not relieve Contractor of responsibility for warranty and guarantee requirements.
2. This applies to the Work that incorporates such products, nor shall they relieve suppliers, manufacturers, and installers required to countersign special warranties with Contractor.

F. Related Damages and Losses: When correcting warranted Work that has been found defective, remove and replace other Work that has been damaged as a result of such defect or that must be removed and replaced to provide access for correction of warranted Work.

G. Reinstatement of Warranty:
1. When Work covered by a warranty has been found defective and has been corrected by replacement or rebuilding, reinstate the warranty by written endorsement.
2. The reinstated warranty shall be equal to the original warranty with an equitable adjustment for depreciation.

H. Replacement Cost:
1. Upon determination that Work covered by a warranty has been found to be defective, replace or reconstruct the Work to a condition acceptable to District, complying with applicable requirements of the Contract Documents.
2. Contractor is responsible for all costs for replacing or reconstructing defective Work regardless of whether District has benefited from use of the Work through a portion of its anticipated useful service life.

I. District's Recourse:
1. Written warranties made to the District are in addition to implied warranties, and do not limit the duties, obligations, rights and remedies otherwise available under law, nor shall warranty periods be interpreted as limitations on time in which the District can enforce such other duties, obligations, rights, or remedies.
2. Rejection of Warranties:
   a. The District reserves the right to reject warranties and to limit selections to products with warranties not in conflict with requirements of the Contract Documents.

J. Warranty as Condition of Acceptance:
1. District reserves the right to refuse to accept Work for the Project where a special warranty, certification, or similar commitment shall be required on such Work or part of the Work, until evidence is presented that entities required to countersign such commitments are willing to do so.

K. Obtain warranties and bonds, executed in duplicate by responsible Subcontractors, suppliers, and manufacturers, within 10 days after completion of the applicable item of work. Except for items put into use with District's permission, leave date of beginning of time of warranty until Date of Final Acceptance is determined.

L. Project Warranty and Guarantee Forms:
1. Example forms for special Project warranties and guarantees are included at the end of this Section.
2. Prepare written documents utilizing the appropriate form, ready for execution by the Contractor, or the Contractor and subcontractor, supplier or manufacturer.
   a. Submit a draft to District through Architect for approval prior to final execution.

3. Refer to product Technical Specifications Sections for specific content requirements, and particular requirements for submittal of special warranties.
4. Prepare standard warranties and guarantees, excepting manufacturers' standard printed warranties and guarantees, on Contractor's, subcontractor's, material supplier's, or manufacturer's own letterhead, addressed to District.
5. Warranty and guarantee letters shall be signed by all responsible parties and by Contractor in every case, with modifications only as approved in advance by District to suit the conditions pertaining to the warranty or guarantee.

M. Manufacturer's Guarantee Form:
1. Manufacturer's guarantee form may be used in lieu of special Project form included at the end of this Section.
2. Manufacturer's guarantee form shall contain appropriate terms and identification, ready for execution by the required parties.
3. If proposed terms and conditions restrict guarantee coverage or require actions by District beyond those specified, submit draft of guarantee to District through Architect for review and acceptance before performance of the Work.
4. In other cases, submit draft of guarantee to District through Architect for approval prior to final execution of guarantee.

N. Verify that documents are in proper form, contain full information, and are notarized.
1. Provide all warranties and guarantees with District named as beneficiary.
2. Signatures: By person authorized to sign warranties, guarantees and bonds on behalf of entity providing such warranty, guarantee or bond.
3. Co-Signature: All installer's warranties and bonds shall be co-signed by Contractor. Manufacturer's guarantees will not require co-signature.

O. Co-execute submittals when required.

P. Retain warranties and bonds until time specified for submittal.

Q. Manual: Bind in commercial quality 8-1/2 by 11 inch three D side ring binders with durable plastic covers.

R. Cover: Identify each binder with typed or printed title WARRANTIES AND BONDS, with title of Project; name, address and telephone number of Contractor and equipment supplier; and name of responsible company principal.
1. If more than one volume of warranties, guarantees and bonds is produced, identify volume number on binder.

S. Table of Contents: Neatly typed, in the sequence of the Table of Contents of the Project Manual, with each item identified with the number and title of the specification section in which specified, and the name of product or work item.

T. Separate each warranty or bond with index tab sheets keyed to the Table of Contents listing. Provide full information, using separate typed sheets as necessary. List Subcontractor, supplier, and manufacturer, with name, address, and telephone number of responsible principal.

U. Form of Warranty and Bond Submittals:

1. Prior to final Application and Certificate for Payment, compile two copies of each required warranty, guarantee and bond, properly executed by Contractor, or jointly by Contractor, subcontractor, supplier, or manufacturer.
2. Collect and assemble all written warranties and guarantees into binders and deliver binders to District for final review and acceptance.
3. Include Table of Contents for binder, neatly typed, following order and Section numbers and titles as used in the Project Manual.
4. Provide heavy paper dividers with celluloid or plastic covered tabs for each separate warranty.
    a. Mark tabs to identify products or installation, and Section number and title.
5. Include on separate typed sheet, if information is not contained in warranty or guarantee form, a description of the product or installation, and the name, address, telephone number and responsible person for applicable installer, supplier and manufacturer.
6. When operating and maintenance data manuals are required for warranted construction, include additional copies of each required warranty and guarantee in each required manual.
    a. Coordinate with requirements listed in the prior articles for operating and maintenance data manuals.

3.07 TIME OF WARRANTY AND BOND SUBMITTALS

A. Submission of Preliminary Copies:
1. Unless otherwise specified, obtain preliminary copies of warranties, guarantees and bonds within ten days of completion of applicable item or Work.
2. Prepare and submit preliminary copies for review as specified herein.

B. Submission of Final Copies:
1. Submit fully executed copies of warranties, guarantees and bonds within ten days of date identified in Certificate of Completion but no later than three days prior to date of final Application for Payment.

C. Date of Warranties and Bonds:
1. Unless otherwise directed or specified, commencement date of warranty, guarantee and bond periods shall be the date established in the Certificate of Completion.
2. Warranties for Work accepted in advance of date stated in Certificate of Completion:
    a. When a designated system, equipment, component parts or other portion of the Work is completed and occupied or put to beneficial use by District:
        1) By separate agreement with Contractor, prior to completion date established in the Certificate of Completion, submit properly executed warranties to District within ten days of completion of that designated portion of the Work.
        2) List date of commencement of warranty, guarantee or bond period as the date established in the Certificate of Completion.
3. Warranties for Work not accepted as of date established in the Certificate of Completion:
    a. Submit documents within ten days after acceptance, listing date of acceptance as beginning of warranty, guarantee or bond period.

D. Duration of Warranties and Guarantees:

1. Unless otherwise specified or prescribed by law, warranty and guarantee periods shall be not less than the Correction Period required by the Conditions of the Contract.
2. In no case, the period is to be less than one year from the date established for completion of the Project in the Certificate of Completion.
3. See product Specifications Sections of the Project Manual for extended warranty and guarantee beyond the minimum one year duration.

END OF SECTION

SECTION 01 78 00.01
WARRANTY FORM LETTER

FOR CONTRACTOR'S / SUBCONTRACTOR'S / MANUFACTURER'S WARRANTY

CONTRACTOR'S/SUBCONTRACTOR'S/SUPPLIER'S LETTERHEAD

SPECIAL LIMITED PROJECT WARRANTY FOR _____ WORK.

We, the undersigned, do hereby warrant that the portion of the Work described above which we have provided for Naranca ES Relocatable Classroom Buildings is in accordance with the Contract Documents and that all such Work as installed will fulfill or exceed all minimum warranty requirements. We agree to repair or replace Work installed by us, together with any adjacent Work which is displaced or damaged by so doing, that proves to be defective in workmanship, material, or function within a period of (years), commencing (date identified in Certificate of Completion, unless otherwise directed) and terminating (date).

The following terms and conditions apply to this warranty (obtain District 's approval before submission):

In the event of our failure to comply with the above-mentioned conditions within a reasonable time period determined by the District , after notification in writing, we, the undersigned, all collectively and separately, hereby authorize the District to have said defective Work repaired or replaced to be made good, and agree to pay to the District upon demand all moneys that the District may expend in making good said defective Work, including all collection costs and reasonable attorney fees.

LOCAL REPRESENTATIVE: FOR WARRANTY MAINTENANCE, REPAIR, OR REPLACEMENT SERVICE, CONTACT:

(Name) _____

(Address) _____

(City) _____ (State) _____ (ZIP) _____

(Phone) _____ / _____

(signed) _____

(Typed Name) _____ (Date) _____

(Title) _____ (Firm) _____

CONTRACTOR:

State License No: _____

(signed) _____

(Date) _____ (Typed Name) _____

(Title) _____ (Firm) _____

FORM LETTER

FOR CONTRACTOR'S / MANUFACTURER'S GUARANTEE

CONTRACTOR'S / MANUFACTURER'S LETTERHEAD

SPECIAL LIMITED PROJECT [__WARRANTY__] [__GUARANTEE__] FOR _____ WORK.

We, the undersigned, do hereby [__warrant__] [__guarantee__] that the portion of the Work described above which [__we have provided__] [__was provided by (Installer or Subcontractor's Name)__] for Naranca ES Relocatable Classroom Buildings in accordance with the Contract Documents and that all such Work as installed will fulfill or exceed all minimum warranty requirements. We agree to repair or replace Work installed by [__us,__] [__(Installer or Subcontractor's Name)__] together with any adjacent Work which is displaced or damaged by so doing, that proves to be defective in workmanship, material, or function within a period of (years), commencing (date indicated in Certificate of Completion, unless otherwise directed) and terminating (date).

The following terms and conditions apply to this [__warranty__] [__guarantee__] (obtain District's approval before submission):

In the event of our failure to comply with the above-mentioned conditions within a reasonable time period determined by the District, after notification in writing, we, the undersigned, all collectively and separately, hereby authorize the District to have said defective Work repaired or replaced to be made good, and agree to pay to the District upon demand all moneys that the District may expend in making good said defective Work, including all collection costs and reasonable attorney fees.

LOCAL REPRESENTATIVE: FOR WARRANTY MAINTENANCE, REPAIR, OR REPLACEMENT SERVICE, CONTACT:

(Name) _____

(Address) _____

(City) _____ (State) _____ (ZIP) _____

(Phone) _____ / _____

(signed) _____

(Date) _____ (Typed Name) _____

(Title) _____ (Firm) _____

CONTRACTOR:

State License No: _____

(signed) _____

(Date) _____ (Typed Name) _____

(Title) _____ (Firm) _____

FORM LETTER

SECTION 01 78 39
PROJECT RECORD DOCUMENTS

PART 1 - GENERAL

1.01 SUMMARY

A. Record Drawings.

B. Record Specifications.

C. Record Product Data.

D. Record Samples.

E. Record Photos and Video.

F. Miscellaneous record submittals.

G. Purpose:

1. The intent of this section is to establish standardized requirements for the collection, organization, and turnover of all project records in a digital format suitable for long-term District reference, maintenance, audits, DSA compliance, and future modernization projects.

1.02 RELATED REQUIREMENTS:

A. Section 01 20 00 - Price and Payment Procedures: Schedule of Values.

B. Section 01 30 00 - Administrative Requirements: Project Coordination.

C. Section 01 78 00 - Closeout Submittals: General Closeout.

1.03 SUBMITTALS

A. See Section 01 30 00 - Administrative Requirements, for submittal procedures.

B. Project Record Documents: Recorded actual locations.

C. Digital Platform and Media:

1. Provide a dedicated digital surface (tablet):

a. Compile all project records, stored, and delivered on a dedicated digital surface (tablet device) provided at project closeout.

b. Device to become District property .

c. Minimum device requirements:

1) Tablet format (iPad or District-approved equivalent). Current 2026 examples:

(a) iPad Pro 13-inch (M5): Ultra Retina XDR Display, 256GB, Landscape 12MP Front Camera/12MP Back Camera, LiDAR Scanner, Wi-Fi 7 with Apple N1.

(b) Samsung Galaxy Tab S11 Ultra Ai Wifi Model, 14.6" 11600 mAh 13MP SM-X930 Dual Camera with S Pen.

(c) Microsoft Surface Pro 2-in-1 Laptop/Tablet (2024), Windows 11 Copilot+ PC, 13" Touchscreen OLED Display, Snapdragon X Elite (12 Core), 16GB RAM, 256GB Storage.

(d) Tablet manufactured within the last three (3) years prior to substantial completion and delivery.

(e) Currently supported operating system at time of delivery. Latest version minus one (-1).

(1) Apple iPadOS.

(2) Android OS.

(3) Windows tablet OS.

2) Minimum Screen Size: 13 inches.

3) Minimum 256 GB storage.

4) Wi-Fi supported, IEEE 802.11.

5) Compatible with District document management systems.

6) Mobile phones, laptops, USB drives, external hard drives, or cloud-only submissions will not be accepted as substitutes.

d. Device shall be reset to factory condition prior to delivery.

e. Reset the device to factory condition prior to loading Project data. Deliver to the District with all Project files fully uploaded, organized, indexed, and ready for immediate use.

f. Device shall include:

1) Charging cable and power adapter.

2) Protective case: Clearly embossed or engraved plate with Project Name, Site, and DSA Application Number(s). Hand written paper label is not acceptable.

2. Required Digital Content: All files shall be clearly labeled, indexed, and organized into logical folders. No scanned PDFs of poor quality will be accepted.

a. Regulatory and Contract Documents:

1) DSA Approved Drawings (Final, stamped).

2) DSA Approved Project Manual (Specifications).

3) DSA Approved Addenda.

4) Construction Change Directives (CCDs).

5) Change Order Requests (CORs).

6) Approved Change Orders.

7) Record Documents (As-Built Drawings).

8) Deferred Approval documentation.

9) Field Memos (suplemental instructions not affecting DSA)

10) Inspector of Record (IOR) reports.

11) DSA Closeout Certification Documents.

b. Project Administration:

1) RFIs (submitted, responded, and closed).

2) Submittals (including rejected and resubmitted items).

3) Meeting minutes (OAC, Pre-construction, Closeout).

4) Approved schedules and schedule updates.
5) Daily reports.
6) Testing and inspection reports.
7) Special inspection reportsCommissioning reports (if applicable)
8) Commissioning reports (if applicable).

D. Visual Documentation:
1. Photography:
a. Progress photos (minimum monthly).
b. Concealed conditions (before cover).
c. Underground utilities.
d. Structural components.
e. MEP rough-in.
f. Final installed conditions
g. Photograph Requirements:
1) Dated.
2) Labeled by building/area.
3) Minimum resolution: 12 MP.
2. Video Documentation:
a. Site walk-through videos at:
1) Rough-in.
2) Substantial Completion.
3) Final Completion.
4) Narrated where possible.
3. Aerial / Drone Imagery:
a. Where permitted by law and District policy:
1) Aerial photos and/or video capturing:Overall site layoutRoof systemsHardscape and utilitiesFiles shall include date, altitude, and direction of view
(a) Overall site layout.
(b) Roof systems.
(c) Hardscape and utilities.
(d) Files shall include date, altitude, and direction of view.

E. File Format Requirements:
1. PDFs for documents.
2. Native files where applicable (DWG, RVT, XLSX).
3. Photos: JPG or PNG.
4. Videos: MP4.
5. Drone files: MP4 + stills.

6. All files must be searchable, non-password protected, and free of proprietary viewing restrictions.

F. Organization and Indexing:

1. Contractor to provide:
   a. A master digital index.
   b. Folder structure aligned to Division 01 categories.
   c. Hyperlinked table of contents where feasible.

G. Acceptance and Final Payment:

1. Submit digital surface and contents prior to final retention release.
2. District reserves the right to reject incomplete or improperly organized submissions.
3. Final payment shall not be processed until complete digital turnover is accepted.

PART 2 -PRODUCTS - NOT USED

PART 3 - EXECUTION

3.01 RECORD DRAWINGS

A. Record Documents: Maintain one set of marked-up PDF copies of the Contract Drawings and Shop Drawings, incorporating new and revised drawings as modifications are issued.

1. Preparation: Mark record prints to show the actual installation where installation varies from that shown originally. Require individual or entity who obtained record data, whether individual or entity is Installer, subcontractor, or similar entity, to provide information for preparation of corresponding marked-up record prints.
   a. Give particular attention to information on concealed elements that would be difficult to identify or measure and record later.
   b. Accurately record information in an acceptable drawing technique.
   c. Record data as soon as possible after obtaining it.
   d. Record and check the markup before enclosing concealed installations.
   e. Cross-reference record prints to corresponding archive photographic documentation.
2. Content: Types of items requiring marking include, but are not limited to, the following:
   a. Field changes of dimensions from Drawings.
   b. Revisions to details shown on Drawings.
      1) Details not on original Contract Drawings. Application of copies of details produced and provided by Architect during construction will be accepted.
   c. Depths of foundations and footing, measured in relation to finish First Floor datum.
   d. Measured horizontal and vertical locations of underground utilities and appurtenances, referenced to permanent ground improvements.
   e. Revisions to routing of piping and conduits.
   f. Revisions to electrical circuits.

g. Actual equipment locations and sizes.
h. Duct size and routing.
i. Locations of concealed internal utilities.
j. Permanent Room names and Room numbers.
k. Changes made by Change Order or Construction Change Directive.
l. Changes made following written orders by District or District Representative.
m. Changes made following Architect's written orders.
n. Note clarifications from RFI's.
o. Field records for variable and concealed conditions.
p. Record information on the Work that is shown only schematically.

3. Mark the Contract Drawings and Shop Drawings completely and accurately. Use personnel proficient at recording graphic information in production of marked-up record prints.
4. Mark record sets with erasable, red-colored pencil. Use other colors to distinguish between changes for different categories of the Work at same location.
5. Mark important additional information that was either shown schematically or omitted from original Drawings.
6. Note Construction Change Directive numbers, alternate numbers, Change Order numbers, and similar identification, where applicable.

B. Record Digital Data Files: Immediately before inspection for Certificate of Substantial Completion, review marked-up record prints with Architect. When authorized, prepare a full set of corrected digital data files of the Contract Drawings, as follows:

1. Format: Same digital data software program, version, and operating system as the original Contract Drawings.
   a. Format: DWG, Version, Microsoft Windows operating system.
2. Incorporate changes and additional information previously marked on record prints. Delete, redraw, and add details and notations where applicable.
3. Refer instances of uncertainty to Architect and District Representative for resolution.
4. Architect will furnish Contractor one set of digital data files of the Contract Drawings for use in recording information.
   a. See Section 013550 for requirements related to use of Architect's digital data files.
   b. Architect will provide data file layer information. Record markups in separate layers.

C. Newly Prepared Record Drawings: Prepare new Drawings instead of preparing record Drawings where Architect determines that neither the original Contract Drawings nor Shop Drawings are suitable to show actual installation.

1. New Drawings may be required when a Change Order is issued as a result of accepting an alternate, substitution, or other modification.
2. Consult Architect and District Representative for proper scale and scope of detailing and notations required to record the actual physical installation and its relation to other construction. Integrate newly prepared record Drawings into record Drawing sets; comply with procedures for formatting, organizing, copying, binding, and submitting.

D. Format: Identify and date each record Drawing; include the designation "PROJECT RECORD DRAWING" in a prominent location.
   1. Record Prints: Organize record prints and newly prepared record Drawings into manageable sets. Bind each set with durable paper cover sheets. Include identification on cover sheets.
   2. Format: Annotated PDF electronic file with comment function enabled.
   3. Record Digital Data Files: Organize digital data information into separate electronic files that correspond to each sheet of the Contract Drawings. Name each file with the sheet identification. Include identification in each digital data file.
   4. Identification:
      a. Project name and number.
      b. Date.
      c. Designation "PROJECT RECORD DRAWINGS."
      d. Name of Architect and District Representative.
      e. Name of Contractor.

3.02 RECORD SPECIFICATIONS

A. Preparation: Mark Specifications in PART 2 to indicate the actual product installation where installation varies from that indicated in Specifications, addenda, and contract modifications.
   1. Give particular attention to information on concealed products and installations that cannot be readily identified and recorded later.
   2. Mark copy with the proprietary name and model number of products, materials, and equipment furnished, including substitutions and product options selected.
   3. Record the name of manufacturer, supplier, Installer, and other information necessary to provide a record of selections made.
   4. For each principal product, indicate whether record Product Data has been submitted in operation and maintenance manuals instead of submitted as record Product Data.
   5. Note related Change Orders, record Product Data, and Record Drawings, where applicable.

B. Format: Submit record Specifications as annotated PDF electronic file.

3.03 RECORD DESIGN AND ENGINEERING DATA

A. Fire Systems:
   1. Provide updated SDU files at each:
      a. One flash drive placed inside fire panel cabinet.
      b. One flash drive turned over to District.
      c. One file copy emailed Operations and Facilities Director or District.

3.04 RECORD PRODUCT DATA

A. Preparation: Mark Product Data to indicate the actual product installation where installation varies substantially from that indicated in Product Data submittal.

1. Give particular attention to information on concealed products and installations that cannot be readily identified and recorded later.
2. Include significant changes in the product delivered to Project site and changes in manufacturer's written instructions for installation.
3. Note related Change Orders, record Specifications, and record Drawings where applicable.

B. Format: Submit record Product Data as annotated PDF electronic file.

1. Include record Product Data directory organized by Specification Section number and title, electronically linked to each item of record Product Data.

3.05 RECORD SAMPLES

A. Immediately before date of Substantial Completion, meet with District or District Representative at Project site to determine which Samples maintained during the construction period aer to be transmitted to District or District Representative for record purposes.

B. Comply with District or District Representative's instructions for packaging, identification, marking, and delivery to District or District Representative's Sample storage space. Dispose of other Samples in the manner specified for disposing surplus and waste materials

3.06 RECORD PHOTOS AND VIDEO

A. Photograph all work before covering up, including:

1. All open trenches and manholes shall be photographed.
2. All exposed utilities should be identified in the photos.
3. Show photograph locations and dates on Record Drawings.

B. Interior video recording of all underground sewer and storm drain lines, under the building and outside to and including the on-site or utility connection.

3.07 MISCELLANEOUS RECORD SUBMITTALS

A. Assemble miscellaneous records required by other Specification Sections for miscellaneous record keeping and submittal in connection with actual performance of the Work. Bind or file miscellaneous records and identify each, ready for continued use and reference.

1. Field records on excavations and foundations.
2. Field records on underground construction and similar work.
3. Surveys showing locations and elevations of underground lines.
4. Invert elevations of drainage piping.
5. Surveys establishing building lines and levels.
6. Authorized measurements using unit prices or allowances.
7. Records of plant treatment.
8. Ambient and substrate condition tests.
9. Certifications received in lieu of labels on bulk products.
10. Batch mixing and bulk delivery records.
11. Testing and qualification of trade persons.

12. Documented qualification of installation firms.
13. Load and performance testing.
14. Inspections and certifications by governing authorities.
15. Leakage and water-penetration tests.
16. Fire-resistance and flame-spread test results.
17. Final inspection and correction procedures.

B. Format: Submit miscellaneous record submittals as PDF electronic file.
   1. Include miscellaneous record submittals directory organized by Specification Section number and title, electronically linked to each item of miscellaneous record submittals.

3.08 SUBMISSION

A. Keep Project Record Documents current, as they will be reviewed for completeness by Architect, Engineer, Project Inspector, and District Representative; as a condition of certification for each Progress Payment Application.

B. Prior to the date of the Notice of Completion, submit marked Record Documents to Architect and District Representative for review, approval and further processing.

3.09 RECORDING AND MAINTENANCE

A. Recording: Maintain one copy of each submittal during the construction period for project record document purposes. Post changes and revisions to project record documents as they occur; do not wait until end of Project.

B. Review of documents by Architect, Engineer, Project Inspector, or District Representative to be in concert with approval of the monthly Application for Payment.

C. Maintenance of Record Documents and Samples:
   1. Store record documents and Samples in the field office apart from the Contract Documents used for construction.
   2. Do not use project record documents for construction purposes.
   3. Maintain record documents in good order and in a clean, dry, legible condition, protected from deterioration and loss.
   4. Provide access to project record documents for Architect and District Representative reference during normal working hours.

END OF SECTION

SECTION 02 41 00
DEMOLITION

PART 1 GENERAL

1.01 SECTION INCLUDES

1.02 RELATED REQUIREMENTS

A. Section 01 10 00 - Summary: Limitations on Contractor's use of site and premises.

B. Section 01 10 00 - Summary: Description of items to be removed by District.

C. Section 01 10 00 - Summary: Description of items to be salvaged or removed for re-use by Contractor.

D. Section 01 50 00 - Temporary Facilities and Controls: Site fences, security, protective barriers, and waste removal.

E. Section 01 60 00 - Product Requirements: Handling and storage of items removed for salvage and relocation.

F. Section 01 70 00 - Execution and Closeout Requirements: Project conditions; protection of bench marks, survey control points, and existing construction to remain; reinstallation of removed products; temporary bracing and shoring.

G. Section 01 74 19 - Construction Waste Management and Disposal: Limitations on disposal of removed materials; requirements for recycling.

H. Section 31 10 00 - Site Clearing: Vegetation and existing debris removal.

I. Section 31 22 00 - Grading: Fill material for filling holes, pits, and excavations generated as a result of removal operations.

1.03 REFERENCE STANDARDS

A. 29 CFR 1926 - U.S. Occupational Safety and Health Standards.

B. CFC Ch. 33 - Fire Safety During Construction and Demolition.

C. NFPA 241 - Standard for Safeguarding Construction, Alteration, and Demolition Operations.

1.04 DEFINITIONS

A. Remove: Remove and legally dispose of items, except those identified for use in recycling, re-use, and salvage programs.

B. Environmental Pollution and Damage: The presence of chemical, physical, or biological elements or agents which adversely affect human health or welfare; unfavorably alter ecological balances of importance to human or animal life; affect other species of importance to humanity; or degrade the utility of the environment for aesthetic, cultural or historical purposes.

C. Inert Fill: A permitted facility that accepts inert waste such as asphalt and concrete exclusively for the purpose of disposal.

1. Inert Solids/Inert Waste: Non-liquid solid waste including, but not limited to, soil and concrete, that does not contain hazardous substances or soluble pollutants at concentrations in excess of water-quality standards established by a regional water board and does not contain significant quantities of decomposable solid waste.

D. Class III Landfill: A landfill that accepts non-hazardous materials such as household, commercial, and industrial waste, resulting from construction, remodeling, repair, and demolition operations. A Class III landfill must have a solid waste facilities permit from the State of California.

E. Demolition Waste: Building materials and solid waste resulting from construction, remodeling, repair, cleanup, or demolition operations that are not hazardous. This term includes, but is not limited to, asphalt concrete, Portland cement concrete, brick, lumber, gypsum wallboard, cardboard and other associated packaging, roofing material, ceramic tile, carpeting, plastic pipe, and steel. The materials may include rock, soil, tree stumps, and other vegetative matter resulting from land clearing and landscaping for construction or land development projects.

F. Chemical Waste: Includes petroleum products, bituminous materials, salts, acids, alkalis, herbicides, pesticides, organic chemicals and inorganic wastes.

G. Recycling: The process of sorting, cleansing, treating and reconstituting materials for the purpose of using the altered form in the manufacture of a new product. Recycling does not include burning, incinerating or thermally destroying solid waste.

H. Reuse: The use, in the same or similar form as it was produced, of a material which might otherwise be discarded.

I. Solid Waste: All putrescible and nonputrescible solid, semisolid, and liquid wastes, including garbage, trash, refuse, paper, rubbish, ashes, industrial wastes, demolition and construction wastes, abandoned vehicles and parts thereof, discarded home and industrial appliances, dewatered, treated, or chemically fixed sewage sludge which is not hazardous waste, manure, vegetable or animal solid and semisolid wastes, and other discarded solid and semisolid wastes. "Solid waste" does not include hazardous waste, radioactive waste, or medical waste as defined or regulated by State law.

1.05 ADMINISTRATIVE REQUIREMENTS

A. Pre-Construction Conference: Conduct a pre-construction conference one week prior to the start of the work of this section; require attendance by all affected trades.

B. Convene a conference at the Project site 3 days prior to starting demolition to review the Drawings and Specifications, requirements of authorities having jurisdiction, instructions and requirements of serving utilities, sequencing and interface considerations and project conditions.

C. Conference shall be attended by DSA, supervisory and quality control personnel of Contractor and all subcontractors performing this and directly-related Work.

D. Submit minutes of meeting to District, Project Inspector and Architect, for Project record purposes.

E. Sequencing: Ensure that utility connections are achieved in an orderly and expeditious manner.

1. Refer to sequence requirements specified in Section 01 10 00 - Summary; and construction progress schedule requirements specified in Section 01 30 00 - Administrative Requirements.

1.06 MATERIALS OWNERSHIP

A. Except for items or materials indicated to be reused, salvaged, reinstalled, or otherwise indicated to remain property of Cajon Valley Union School District, demolished materials shall become the Contractor's property and shall be removed, recycled, or disposed from Project site in an appropriate and legal manner.

1. Arrange a meeting no less than ten (10) days prior to demolition with the District or DSA and other designated representatives to review any salvageable items to determine if District wants to retain ownership, and discuss Contractor's Waste Management and Recycling Plan.

B. Storage or sale of removed items or materials on-site will not be permitted without advance written approval.

1.07 SUBMITTALS

A. See Section 01 30 00 - Administrative Requirements, for submittal procedures.

B. Site Plan: Showing:

1. Areas for temporary construction and field offices.
2. Areas for temporary and permanent placement of removed materials.

C. Project Record Documents: Accurately record actual locations of capped and active utilities and subsurface construction.

1. Record drawings: Identify and accurately locate capped utilities and other subsurface structural, electrical, or mechanical conditions.

1.08 SUBMITTALS

A. Demolition and Removal Procedures and Schedule: Submit for Project record only.

B. Project Record Drawings: Submit in accordance with provisions specified in Section 01 78 00 - Closeout Submittals. Indicate verified locations of underground utilities and storm drainage system on project record drawings.

1.09 QUALITY ASSURANCE

A. Demolition Firm Qualifications: Company specializing in the type of work required.

1. Minimum of 5 years of documented experience.

1.10 SCHEDULING

A. Schedule Work to precede new construction.

B. Describe demolition removal procedures and schedule.

C. Perform work between the hours of 8am and 5pm, subject to noise abatement regulations and District's approval for noise considerations.

PART 2 PRODUCTS -- NOT USED

PART 3 EXECUTION

3.01 SCOPE

A. Remove paving and curbs as required to accomplish new work.

B. Remove other items indicated, for salvage, relocation, and recycling.

C. Fill excavations, open pits, and holes in ground areas generated as result of removals, using specified fill; compact fill as required so that required rough grade elevations do not subside within one year after completion.

3.02 GENERAL PROCEDURES AND PROJECT CONDITIONS

A. Conform to the relevant Article of the General Conditions, South Coast Air Quality Management District and other applicable regulatory procedures when discovering hazardous or contaminated materials.

B. Selective Demolition of Site and Building Elements:

1. Use techniques acceptable to authorities having jurisdiction and which will achieve intended results and provide protection of surrounding features to remain.
2. Some items may have been demolished prior to Work of this Contract. Verify existing conditions prior to start of demolition. If items are or have been demolished contact the Architect.
3. Some items may require postponement of demolition until late in Contract Time period.
4. Phase demolition as necessary to provide adequate interfacing of related Work.
5. Demolish in an orderly and careful manner. Protect existing foundations, retaining walls, utility structures, other structures and finish materials to remain.

C. Field Measurements and Conditions:

1. Survey existing conditions and correlate with requirements indicated to determine extent of demolition and recycling required.
2. In addition to provisions of the Conditions of the Contract, verify dimensions and field conditions prior to construction. Verify condition of substrate and adjoining Work before proceeding with demolition Work. If conflict is found notify DSA, Project Inspector and Architect.

D. Comply with other requirements specified in Section 01 70 00.

E. Comply with governing EPA notification regulations before starting demolition. Comply with hauling and disposal regulations of authorities having jurisdiction. Obtain and pay for all permits required.

F. Environmental Controls

1. Comply with federal, state and local regulations pertaining to water, air, solid waste, recycling, chemical waste, sanitary waste, sediment and noise pollution.
2. Confine demolition activities to areas defined by public roads, easements, and work area limits indicated on the drawings.

3. Temporary Construction: Remove indications of temporary construction facilities, such as haul roads, work areas, structures, stockpiles or waste areas.
4. Water Resources: Comply with applicable regulations concerning the direct or indirect discharge of pollutants to underground and natural surface waters.
    a. Oily Substances: Prevent oily or other hazardous substances from entering the ground, drainage areas, or local bodies of water in such quantities as to affect normal use, aesthetics, or produce a measurable ecological impact on the area.
        1) Store and service construction equipment at areas designated for collection of oil wastes.
5. Dust Control, Air Pollution, and Odor Control: Prevent creation of dust, air pollution and odors.
    a. Use temporary enclosures and other appropriate methods to limit dust and dirt rising and scattering in air to lowest practical level.
    b. Store volatile liquids, including fuels and solvents, in closed containers.
    c. Properly maintain equipment to reduce gaseous pollutant emissions.
6. Noise Control: Perform demolition operations to minimize noise.
    a. Provide equipment, sound-deadening devices, and take noise abatement measures that are necessary to comply with the requirements of this Contract.
    b. At least once every five successive working days while work is being performed above 55 dB noise level, measure sound level for noise exposure due to the demolition.
        1) Measure sound levels on the 'A' weighing network of a General Purpose sound level meter at slow response.
        2) To minimize the effect of reflective sound waves at buildings, measurements may be taken three to six feet in front of any building face.

G. Comply with applicable codes and regulations for demolition operations and safety of adjacent structures and the public.
1. Obtain required permits.
2. Comply with applicable requirements of NFPA 241 and CFC Ch. 33.
3. Use of explosives is not permitted.
4. Take precautions to prevent catastrophic or uncontrolled collapse of structures to be removed; do not allow worker or public access within range of potential collapse of unstable structures.
    a. Survey condition of the building to determine whether removing any element might result in a structural deficiency or unplanned collapse of any portion of the structure or adjacent structures during demolition.
        1) Retain a licensed and qualified civil or structural engineer to provide analysis, including calculations, necessary to ensure the safe execution of the demolition work.
    b. Prevent movement or settlement of adjacent structures. Provide bracing and shoring.

c. Perform surveys as the Work progresses to detect hazards resulting from demolition activities.

5. Provide, erect, and maintain temporary barriers and security devices.

a. Provide, erect, and maintain temporary barriers, safety and security devices , for protection of streets, sidewalks, curbs, adjacent property and the public.

b. Protection: Protect existing construction and adjacent areas with temporary barriers and security devices in accordance with requirements specified in Section 01 50 00 - Temporary Facilities and Controls.

1) Review location and type of construction of temporary barriers with District and/or the DSA.

2) Barriers shall control dust, debris and provide protection for persons occupying and using adjacent facilities.

3) Maintain protected egress and access at all times, in accordance with requirements of authorities having jurisdiction and with permission of DSA (AHJ having jurisdiction).

6. Use physical barriers to prevent access to areas that could be hazardous to workers or the public.

7. Conduct operations to minimize effects on and interference with adjacent structures and occupants.

8. Do not close or obstruct roadways or sidewalks without permit.

9. Conduct operations to minimize obstruction of public and private entrances and exits; do not obstruct required exits at any time; protect persons using entrances and exits from removal operations.

10. Obtain written permission from owners of adjacent properties when demolition equipment will traverse, infringe upon or limit access to their property.

H. Do not begin removal until receipt of notification to proceed from District.

I. Do not begin removal until built elements to be salvaged or relocated have been removed.

J. Protect existing structures and other elements that are not to be removed.

1. Provide bracing and shoring.

2. Prevent movement or settlement of adjacent structures.

3. Stop work immediately if adjacent structures appear to be in danger.

4. Protect existing landscaping materials, appurtenances, structures and items that are not to be demolished, or are on adjacent property.

5. Mark location of utilities.

K. Minimize production of dust due to demolition operations; do not use water if that will result in ice, flooding, sedimentation of public waterways or storm sewers, or other pollution.

L. Hazardous Materials: Comply with 29 CFR 1926 and state and local regulations.

M. Remove materials to be re-installed or retained in manner to prevent damage. Store and protect in accordance with requirements of Section 01 60 00 - Product Requirements.

N. Perform demolition in a manner that maximizes salvage and recycling of materials.

1. Comply with requirements of Section 01 74 19 - Construction Waste Management and Disposal.
2. Dismantle existing construction and separate materials.
3. Set aside reusable, recyclable, and salvageable materials; store and deliver to collection point or point of reuse.

O. Damages: Promptly repair damages to adjacent facilities caused by demolition operations.

P. Partial Removal of Paving and Curbs: Neatly saw cut at right angle to surface.

3.03 EXISTING UTILITIES

A. Coordinate work with utility companies; notify before starting work and comply with their requirements; obtain required permits.

B. Protect existing utilities to remain from damage.

C. Do not disrupt public utilities without permit from authority having jurisdiction.

D. Do not close, shut off, or disrupt existing life safety systems that are in use without at least 7 days prior written notification to District.

E. Do not close, shut off, or disrupt existing utility branches or take-offs that are in use without at least 3 days prior written notification to District.

F. Locate and mark utilities to remain; mark using highly visible tags or flags, with identification of utility type; protect from damage due to subsequent construction, using substantial barricades if necessary.

G. Remove exposed piping, valves, meters, equipment, supports, and foundations of disconnected and abandoned utilities.

3.04 DEBRIS AND WASTE REMOVAL

A. Remove debris, junk, and trash from site.

B. Remove from site all materials not to be reused on site; comply with requirements of Section 01 74 19 - Waste Management.

C. Remove temporary work.

D. Leave site in clean condition, ready for subsequent work.

E. Clean up spillage and wind-blown debris from public and private lands.

END OF SECTION

SECTION 03 30 00
CAST-IN-PLACE CONCRETE

PART 1 GENERAL

1.01 SECTION INCLUDES

A. Concrete formwork.

B. Concrete reinforcement.

C. Joint devices associated with concrete work.

D. Miscellaneous concrete elements, including fabric structure footings.

E. Concrete curing.

1.02 RELATED REQUIREMENTS

1.03 REFERENCE STANDARDS

A. ACI CODE-318 - Building Code for Structural Concrete—Code Requirements and Commentary.

B. ACI PRC-211.1 - Selecting Proportions for Normal-Density and High Density-Concrete - Guide.

C. ACI PRC-304 - Guide for Measuring, Mixing, Transporting, and Placing Concrete.

D. ACI PRC-305 - Guide to Hot Weather Concreting.

E. ACI PRC-306 - Guide to Cold Weather Concreting.

F. ACI PRC-308 - Curing of Concrete—Guide.

G. ACI PRC-347 - Guide to Formwork for Concrete.

H. ACI SPEC-117 - Specification for Tolerances for Concrete Construction and Materials and Commentary.

I. ACI SPEC-301 - Specifications for Concrete Construction.

J. ASTM A615/A615M - Standard Specification for Deformed and Plain Carbon-Steel Bars for Concrete Reinforcement.

K. ASTM C33/C33M - Standard Specification for Concrete Aggregates.

L. ASTM C39/C39M - Standard Test Method for Compressive Strength of Cylindrical Concrete Specimens.

M. ASTM C94/C94M - Standard Specification for Ready-Mixed Concrete.

N. ASTM C143/C143M - Standard Test Method for Slump of Concrete.

O. ASTM C150/C150M - Standard Specification for Portland Cement.

P. ASTM C494/C494M - Standard Specification for Chemical Admixtures for Concrete.

Q. ASTM C881/C881M - Standard Specification for Epoxy-Resin-Base Bonding Systems for Concrete.

R. ASTM C979/C979M - Standard Specification for Pigments for Integrally Colored Concrete.

S. ASTM C1240 - Standard Specification for Silica Fume Used in Cementitious Mixtures.

T. ASTM C1602/C1602M - Standard Specification for Mixing Water Used in the Production of Hydraulic Cement Concrete.

1.04 SUBMITTALS

A. See Section 01 30 00 - Administrative Requirements for submittal procedures.

B. Product Data: Submit manufacturers' data on manufactured products showing compliance with specified requirements and installation instructions.

1. For curing compounds, provide data on method of removal in the event of incompatibility with floor covering adhesives.

C. Mix Design: Submit proposed concrete mix design.

1. Indicate proposed mix design complies with requirements of ACI SPEC-301, Section 4 - Concrete Mixtures.
2. Indicate proposed mix design complies with requirements of ACI CODE-318, Chapter 19A - Concrete: Design and Durability Requirements, and Chapter 26 - Construction Documents and Inspection.
   a. Reports must include all the data as required to verify conformance with ACI CODE-318, Section 26.4.2.2, and the following:
      1) Mix design identification number.
      2) Cement certification.
      3) Fly ash certification of compliance or test data.
      4) Admixture data.
      5) Aggregate test data.
3. Mix Designs Utilizing 15% Or More Fly Ash: Proportioning conform to ACI CODE-318, Section 26.4.3.
4. Mix Design Review and Approval Process: An engineer from a DSA approved (LEA) testing laboratory shall review the mix design report and the design professional in responsible charge of the project shall approve the mix design.
   a. Review by LEA Engineer: A qualified civil engineer associated with a DSA approved (LEA) testing laboratory shall review the report for conformance with ACI CODE-318, Sections 26.4.2.2. Issue an evaluation report of findings and recommendation for either acceptance or rejection and forward his report to the design professional in responsible charge of the project.
   b. Approval by the Project Engineer in Responsible Charge: Based on the findings and recommendation of the LEA engineer's evaluation report, the project design professional in responsible charge decides whether to accept or reject the mix design. He will issue a letter stating his acceptance or rejection. The letter shall be sent to DSA, and copied to the project inspector, the LEA laboratory, and the mix design engineer.
   c. Documentation by the Concrete Supplier: The concrete supplier shall submit copies of the cement certification, fly ash certification of compliance or test data, admixture data, aggregate test data, and mix design identification number to the project inspector and the LEA engineer who reviewed the mix design report.

5. Indicate proposed mix design complies with admixture manufacturer's written recommendations.
6. Mix Design: Submit mix designs prepared, stamped and signed by a Civil Engineer licensed in the State of California.

D. Samples: Submit two, 12 inch long samples of waterstops and construction joint devices.

E. Quality Control Submittals:
1. Field tests: Submit reports of all slump, strength and air content tests as required by authorities having jurisdiction and as indicated on the Drawings and specified herein.
2. Delivery tickets: Have available copies of delivery tickets complying with ASTM C94/C94M for each load of concrete delivered to site. Include on the tickets the additional information specified in the ASTM document.

F. Test Reports: Submit report for each test or series of tests specified.

G. Manufacturer's Installation Instructions: For concrete accessories, indicate installation procedures and interface required with adjacent construction.

H. Project Record Documents: Accurately record actual locations of embedded utilities and components that will be concealed from view upon completion of concrete work.

1.05 QUALITY ASSURANCE

A. Perform work of this section in accordance with ACI SPEC-301 and ACI CODE-318.
1. Maintain one copy of each document on site.

B. Follow recommendations of ACI PRC-305(305R) when concreting during hot weather.

C. Follow recommendations of ACI PRC-306(306R) when concreting during cold weather.

D. Regulatory Requirements:
1. Conform to California Building Code (CBC) Chapter 19A requirement, as amended and adopted by authorities having jurisdiction.
2. Chemical products field-applied to concrete shall comply with applicable air quality requirements of authorities having jurisdiction.
   a. Comply with Section 01 61 16 - Volatile Organic Compound (VOC) Content Restrictions, CALGreen Section 5.504.4 Finish material pollutant control; 5.504.4.1 Adhesives, sealants and caulks; 5.504.4.3 Paints and coatings.
   b. Comply with CALGreen Section A5.405.4 Recycled content.
   c. Comply with CALGreen Section A5.406 Enhanced Durability and Reduced Maintenance.

E. Testing Agency Services: District will engage an independent testing and inspection agency to conduct tests and perform other services specified for quality control during construction, as required by Section(s) 01 40 00 - Quality Requirements and 01 45 33 - Code-Required Special Inspections and Procedures.

1.06 DELIVERY AND HANDLING

A. Protection During Concrete Placement: Provide protective coverings and runways, and use appropriate equipment and means of access to Work areas to avoid soiling or damage to existing conditions.

B. Runoff: Prevent run off of water contaminated by construction agents and chemicals from soiling existing surfaces and from contaminating existing and future landscape areas.

1.07 WARRANTY

A. See Section 01 78 00 - Closeout Submittals for additional warranty requirements.

PART 2 PRODUCTS

2.01 FORMWORK

A. Formwork Design and Construction: Comply with guidelines of ACI PRC-347 to provide formwork that will produce concrete complying with tolerances of ACI SPEC-117.

B. Form Materials: Contractor's choice of standard products with sufficient strength to withstand hydrostatic head without distortion in excess of permitted tolerances.

1. Form Coating: Release agent that will not adversely affect concrete or interfere with application of coatings.
2. Form Ties: Cone snap type that will leave no metal within 1-1/2 inches of concrete surface.

2.02 REINFORCEMENT MATERIALS

A. Reinforcing Steel: ASTM A615/A615M, Grade 60 (60,000 psi).

1. Type: Deformed billet-steel bars.

B. Reinforcement Accessories:

1. Tie Wire: Annealed, minimum 16 gauge, 0.0508 inch.
2. Chairs, Bolsters, Bar Supports, Spacers: Sized and shaped for adequate support of reinforcement during concrete placement.

2.03 CONCRETE MATERIALS

A. Cement: ASTM C150/C150M, Type II - Moderate Portland type.

1. Cement used in contact with soil shall be Type V - Sulfate Resistant.
2. Acquire cement for entire project from same source.

B. Fine and Coarse Aggregates: ASTM C33/C33M.

1. Acquire aggregates for entire project from same source.
2. Other than Structural Concrete: Conform to requirements for structural concrete.

C. Silica Fume: ASTM C1240, proportioned in accordance with ACI PRC-211.1.

D. Water: ASTM C1602/C1602M; clean, potable, and not detrimental to concrete.

2.04 ADMIXTURES

A. The use of any chemical admixture is subject to prior approval by DSA.

B. Use no admixtures not included in mix design. Products of the following manufacturers are specified and will be acceptable provided they comply with referenced standards all other requirements of the Contract Documents:

C. Do not use chemicals that will result in soluble chloride ions in excess of 0.1 percent by weight of cement.

D. Water Reducing and Accelerating Admixture: ASTM C494/C494M Type E.

1. Products:

a. Euclid Chemical Company; ACCELGUARD 80: www.euclidchemical.com/#sle.

b. Substitutions: See Section 01 60 00 - Product Requirements.

E. Water Reducing and Retarding Admixture: ASTM C494/C494M Type D.

1. Provide pigmented type, with ASTM C979/C979M inorganic pigments.

F. Water Reducing Admixture: ASTM C494/C494M Type A.

1. Products:

a. Euclid Chemical Company; EUCON NW: www.euclidchemical.com/#sle.

b. Substitutions: See Section 01 60 00 - Product Requirements.

2.05 BONDING AND JOINTING PRODUCTS

A. Epoxy Bonding System:

1. Complying with ASTM C881/C881M and of Type required for specific application.

2. Products:

a. Convergent Concrete Technologies; CRACKBOND 2100 MV: www.atcepoxy.com/#sle.

b. Euclid Chemical Company; DURAL FAST SET LV: www.euclidchemical.com/#sle.

c. Euclid Chemical Company; DURALFLEX GEL: www.euclidchemical.com/#sle.

d. Euclid Chemical Company; DURALFLEX LV: www.euclidchemical.com/#sle.

e. Euclid Chemical Company; DURAL 452 GEL, DURAL 452 LV, or DURAL 452 MV: www.euclidchemical.com/#sle.

f. Dayton Superior Corporation: www.daytonsuperior.com/#sle.

g. Mapei Corporation; Planibond AE: www.mapei.com/#sle.

h. Mapei Corporation; Planibond 3C: www.mapei.com/#sle.

i. SpecChem, LLC; SpecPoxy 1000, SpecPoxy 2000, SpecPoxy 3000, or SpecPoxy 3000FS: www.specchemllc.com/#sle.

j. W. R. Meadows, Inc; Rezi-Weld Gel Paste, Rezi-Weld Gel Paste State, Rezi-Weld 1000: www.wrmeadows.com/#sle.

k. Substitutions: See Section 01 60 00 - Product Requirements.

B. Dowel Sleeves: Plastic sleeve for smooth, round, steel load-transfer dowels.

2.06 CURING MATERIALS

A. Water: Potable, not detrimental to concrete. ASTM C1602/C1602M per ACI CODE-318 Sec. 26.4.3.1

2.07 CONCRETE MIX DESIGN

A. Proportioning Normal Weight Concrete: Comply with ACI PRC-211.1 recommendations and ACI CODE-318.

B. Concrete Strength: Establish required average strength for each type of concrete on the basis of field experience or trial mixtures, as specified in ACI SPEC-301.

1. For trial mixtures method, employ independent testing agency acceptable to Architect for preparing and reporting proposed mix designs.

C. Admixtures: Add acceptable admixtures as recommended in ACI PRC-211.1 and at rates recommended or required by manufacturer.

D. Normal Weight Concrete:

1. Compressive Strength, when tested in accordance with ASTM C39/C39M at 28 days: 4,000 pounds per square inch, unless noted otherwise.
2. Calcined Pozzolan Content: Maximum 10 percent of cementitious materials by weight.
3. Silica Fume Content: Maximum 5 percent of cementitious materials by weight.
4. Water-Cement Ratio: Maximum w/c = 50 percent by weight, unless noted otherwise.
5. Maximum Slump: As indicated on Drawings.
   a. 4 inches prior to adding water-reducing admixtures or super-plasticizers.
   b. 6 inches 6" for mixes including admixtures or super-plasticizers.
6. Maximum Aggregate Size: .
   a. Structural Concrete: Maximum size not larger than 1/5 of narrowest dimension between forms, 1/3 depth of slab nor 3/4 of minimum clear spacing between individual reinforcing bars.
   b. Other than Structural Concrete: Conform to requirements for structural concrete.

2.08 MIXING

A. Transit Mixers: Comply with ASTM C94/C94M.

B. Adding Water: If concrete arrives on-site with slump less than suitable for placement, do not add water that exceeds the maximum water-cement ratio or exceeds the maximum permissible slump.

PART 3 EXECUTION

3.01 EXAMINATION

A. Verify lines, levels, and dimensions before proceeding with work of this section.

3.02 PREPARATION

A. Verify that forms are clean and free of rust before applying release agent.

B. Coordinate placement of embedded items with erection of concrete formwork and placement of form accessories.

C. Where new concrete is to be bonded to previously placed concrete, prepare existing surface by cleaning and applying bonding agent in according to bonding agent manufacturer's instructions.

1. Use epoxy bonding system for bonding to damp surfaces, for structural load-bearing applications, and where curing under humid conditions is required.

3.03 INSTALLING REINFORCEMENT AND OTHER EMBEDDED ITEMS

A. Comply with requirements of ACI SPEC-301. Clean reinforcement of loose rust and mill scale, and accurately position, support, and secure in place to achieve not less than minimum concrete coverage required for protection.

3.04 CONCRETE MIXING

A. Concrete Mixing, General: Comply with ACI CODE-318 as adopted by CBC, Title 24, Part 2, Chapter 19A and ACI PRC-304 - Guide for Measuring, Mixing, Transporting, and Placing Concrete. Introduce and mix admixtures in compliance with manufacturer's instructions and recommendations.

3.05 PLACING CONCRETE

A. Notify District's Inspector and at least 2 working days in advance of placing concrete.

B. Place concrete in accordance with ACI PRC-304.

C. Notify Architect not less than 24 hours prior to commencement of placement operations.

D. Maintain records of concrete placement. Record date, location, quantity, air temperature, and test samples taken.

E. Place concrete continuously without construction (cold) joints wherever possible; where construction joints are necessary, before next placement prepare joint surface by removing laitance and exposing the sand and sound surface mortar, by sandblasting or high-pressure water jetting.

3.06 CONCRETE FINISHING

A. Repair surface defects, including tie holes, immediately after removing formwork.

1. Remove honeycombed areas and other defective concrete down to sound concrete, cutting perpendicular to surface or slightly undercutting without damaging reinforcement. Dampen patch location and area immediately surrounding it prior to applying bonding compound or patching mortar.

2. Before bonding compound has dried, apply patching mixture matching original concrete in materials and mix except for omission of coarse aggregate, and using a blend of white and normal portland cement as necessary to achieve color match. Consolidate thoroughly and strike off slightly higher than surrounding surface.

B. Exposed Form Finish: Rub down or chip off and smooth fins or other raised areas 1/4 inch or more in height. Provide finish as follows:

1. Grout Cleaned Finish: Wet areas to be cleaned and apply grout mixture by brush or spray; scrub immediately to remove excess grout. After drying, rub vigorously with clean burlap, and keep moist for 36 hours.

3.07 CURING AND PROTECTION

A. Comply with requirements of ACI PRC-308. Immediately after placement, protect concrete from premature drying, excessively hot or cold temperatures, and mechanical injury.

B. Maintain concrete with minimal moisture loss at relatively constant temperature for period necessary for hydration of cement and hardening of concrete.

1. Normal concrete: Not less than seven days.

C. Formed Surfaces: Cure by moist curing with forms in place for full curing period.

3.08 MISCELLANEOUS CONCRETE ITEMS

A. Filling In: Fill in holes and openings left in concrete structures for passage of Work specified in other Sections, after such Work is in place. Mix, place, and cure concrete as specified to blend with in-place construction. Provide other miscellaneous concrete filling shown or required to complete Work. Us non-shrink grout where required or indicated.

B. Curbs: Provide monolithic finish to interior curbs by stripping forms while concrete is still green and by steel-troweling surfaces to a hard, dense finish with corners, intersections, and terminations slightly rounded.

C. Equipment Bases and Foundations: Provide machine and equipment bases and foundations as shown on drawings. Set anchor bolts for machines and equipment to template at correct elevations, complying with diagrams or templates of manufacturer furnishing machines and equipment.

3.09 FIELD QUALITY CONTROL

A. An independent testing agency will perform field quality control tests, as specified in Section 01 40 00 - Quality Requirements.

B. Maintain records of concrete placement. Record date, location, quantity, air temperature, and test samples taken.

C. Provide free access to concrete operations at project site and cooperate with appointed firm.

D. Submit proposed mix design of each class of concrete to inspection and testing firm for review prior to commencement of concrete operations.

E. Field Certifications: For all concrete, provide signed copy of batch plant's certificate stating quantity of each material, amount of water, admixtures, departure time and date accompanying each load of materials or concrete.

F. Field Tests of Concrete: Perform tests in accordance with applicable California Building Code requirements, ACI SPEC-301 and requirements of authorities having jurisdiction.

G. Tests of concrete and concrete materials may be performed at any time to ensure compliance with specified requirements.

H. Compressive Strength Tests: ACI CODE-318, 26.12.2.1(a), ASTM C39/C39M, for each test, mold and cure a minimum of four concrete test cylinders. Project Inspector to obtain test samples each day, for every 50 cubic yards, 2,000 sq. ft. of slab or wall surface area, or less of each class of concrete placed.

1. Take additional samples for 7-day compressive strength tests for of each class of concrete at the beginning of of concrete work or whenever the mix or aggregate is changed.

2. Test one cylinder at 7 days and two at 28 days after placement.

3. Maintain fourth cylinder to be tested at 56 days only if 28-day test fails to meet strength requirement.

4. Take one additional test cylinder during cold weather concreting and cure it at job site under same conditions as concrete it represents. Test cold weather cylinder at 28 days.
5. Comply with ACI CODE-318, 26.12.3 Acceptance Criteria for Standard-Cured Specimens.
   a. Strength level of a concrete mixture shall be acceptable if (1) and (2) are satisfied:
      1) Every average of any three consecutive strength tests equals or exceeds fc'.
      2) No strength test falls below fc' by more than 500 psi if fc' is 5000 psi or less; or by more than 0.10fc' if fc' exceeds 5000 psi.
   b. If either of the requirements of 26.12.3.1(a) is not satisfied, steps shall be taken to increase subsequent strength tests.
   c. Requirements of 26.12.6 for investigating strength tests shall apply if the requirements of 26.12.3.1(a)(2) are not met.

I. Take one additional test cylinder during cold weather concreting, cured on job site under same conditions as concrete it represents.

J. Perform one slump test for each set of test cylinders taken, following procedures of ASTM C143/C143M.

3.10 DEFECTIVE CONCRETE

A. Test Results: The testing agency shall report test results in writing to Architect and Contractor within 24 hours of test.

B. Defective Concrete: Concrete not complying with required lines, details, dimensions, tolerances or specified requirements.

C. Repair or replacement of defective concrete will be determined by the Architect. The cost of additional testing shall be borne by Contractor when defective concrete is identified.
   1. Obtain repair details from Architect (Structural Engineer) and approved by DSA before proceeding.

D. Do not patch, fill, touch-up, repair, or replace exposed concrete except upon express direction of Architect for each individual area.

3.11 PROTECTION

A. Do not permit traffic over unprotected concrete floor surface until fully cured.

B. Protect concrete from marring and damage due to weather and construction activities.
   1. Protective measures shall include providing temporary coverings, and be in accordance with Section 01 50 00 - Temporary Facilities and Controls, and shall prohibit all non-essential construction activities, including cleaning and maintenance of construction equipment.
   2. In particular, protect concrete floor slabs from oil, paint and other products that might penetrate and degrade concrete surface.

END OF SECTION

SECTION 05 50 00
METAL FABRICATIONS

PART 1 GENERAL

1.01 SECTION INCLUDES

A. Shop fabricated steel items.

B. Requirements for materials and equipment for post-installed mechanical and adhesive anchors in concrete.

1.02 RELATED REQUIREMENTS

A. Section 09 91 13 - Exterior Painting: Paint finish.

1.03 REFERENCE STANDARDS

A. ACI 318 - Building Code Requirements for Structural Concrete.

B. ACI 355.4 - Qualification of Post-Installed Adhesive Anchors in Concrete.

C. ACI 440.2R - Guide for the Design and Construction of Externally Bonded FRP Systems for Strengthening Concrete Structures.

D. AISC 207 - Standard for Certification Programs.

E. ASTM A36/A36M - Standard Specification for Carbon Structural Steel.

F. ASTM A123/A123M - Standard Specification for Zinc (Hot-Dip Galvanized) Coatings on Iron and Steel Products.

G. ASTM A193/A193M - Standard Specification for Alloy-Steel and Stainless Steel Bolting for High Temperature or High Pressure Service and Other Special Purpose Applications.

H. ASTM A500/A500M - Standard Specification for Cold-Formed Welded and Seamless Carbon Steel Structural Tubing in Rounds and Shapes.

I. ASTM A615/A615M - Standard Specification for Deformed and Plain Carbon-Steel Bars for Concrete Reinforcement.

J. ASTM A653/A653M - Standard Specification for Steel Sheet, Zinc-Coated (Galvanized) or Zinc-Iron Alloy-Coated (Galvannealed) by the Hot-Dip Process.

K. ASTM A1011/A1011M - Standard Specification for Steel, Sheet and Strip, Hot-Rolled, Carbon, Structural, High-Strength Low-Alloy, High-Strength Low-Alloy with Improved Formability, and Ultra-High Strength.

L. ASTM B633 - Standard Specification for Electrodeposited Coatings of Zinc on Iron and Steel.

M. ASTM E329 - Standard Specification for Agencies Engaged in Construction Inspection, Testing, or Special Inspection.

N. ASTM F594 - Standard Specification for Stainless Steel Nuts.

O. AWS A2.4 - Standard Symbols for Welding, Brazing, and Nondestructive Examination.

P. AWS B2.1/B2.1M - Specification for Welding Procedure and Performance Qualification.

Q. AWS D1.1/D1.1M - Structural Welding Code - Steel.

R. AWS D1.2/D1.2M - Structural Welding Code - Aluminum.

S. DSA IR 17-11 - Identification, Sampling and Testing of Threaded Steel Anchor Bolts and Anchor Rods.

T. DSA IR 22-2 - Anchor Rods (Bolts) Connecting Steel to Concrete.

U. IAS AC172 - Accreditation Criteria for Fabricator Inspection Programs for Structural Steel AC172.

V. SSPC-PA 1 - Shop, Field, and Maintenance Painting of Steel.

W. SSPC-Paint 15 - Steel Joist Shop Primer/Metal Building Primer.

X. SSPC-Paint 20 - Zinc-Rich Primers (Type I, "Inorganic," and Type II, "Organic").

Y. SSPC-SP 2 - Hand Tool Cleaning.

Z. SSPC-SP 3 - Power Tool Cleaning.

AA. SSPC-SP 5 - White Metal Blast Cleaning.

BB. SSPC-SP 6 - Commercial Blast Cleaning.

CC. SSPC-SP 10 - Near-White Blast Cleaning.

1.04 SUBMITTALS

A. See Section 01 30 00 - Administrative Requirements, for submittal procedures.

B. ICC ES Reports: If requested, ICC Evaluation Service report indicating conformance with ICC-ES Acceptance Criteria.

C. Shop Drawings: Indicate profiles, sizes, connection attachments, reinforcing, anchorage, size and type of fasteners, and accessories. Include erection drawings, elevations, and details where applicable.

1. Indicate welded connections using standard AWS A2.4 welding symbols. Indicate net weld lengths.

D. Welders' Qualification Statement: Welders' certificates in accordance with AWS B2.1/B2.1M and dated no more than 12 months before start of scheduled welding work.

E. Fabricator's Qualification Statement: Provide documentation showing steel fabricator is accredited under IAS AC172 or AISC 207.

1.05 QUALITY ASSURANCE

A. Welder Qualifications: Welding processes and welding operators qualified in accordance with AWS D1.1/D1.1M and AWS D1.2/D1.2M and dated no more than 12 months before start of scheduled welding work.

B. Fabricator Qualifications: A qualified steel fabricator that is accredited by IAS AC172, AISC 207, or City of Los Angeles Certified Fabricator.

C. Testing Agency Qualifications: An independent agency qualified according to ASTM E329 and Section 01 45 33 for testing indicated.

D. Installer Training: Prior to beginning the work, manufacturer or manufacturer’s representative shall provide on-site training for all contractor’s personnel who will be installing anchors.

PART 2 PRODUCTS

2.01 REGULATORY REQUIREMENTS

A. Conform to applicable requirements of California Building Code (CBC), Title 24, Part 2, as amended and adopted by authorities having jurisdiction.

1. Comply with Title 24, Part 9, California Fire Code Chapter 35 "Welding and Other Hot Work."

2.02 MATERIALS - STEEL

A. Steel Sections: ASTM A36/A36M, for channels, angles and plates.

B. Steel Tubing: ASTM A500/A500M Grade B cold-formed structural tubing.

C. Slotted Channel Framing: ASTM A653/A653M, Grade 33.

D. Slotted Channel Fittings: ASTM A1011/A1011M.

E. Mechanical Fasteners: Same material as or compatible with materials being fastened; type consistent with design and specified quality level.

F. Bolts, Nuts, and Washers: As indicated on Drawings.

G. Welding Materials: AWS D1.1/D1.1M; type required for materials being welded.

H. Shop and Touch-Up Primer: SSPC-Paint 15, complying with VOC limitations of authorities having jurisdiction.

1. Comply with SSPC-PA 1. Coordinate with requirements specified in Section 09 91 13 - Exterior Painting .

a. Coordinate primer with finish paint and coating, as applicable, to provide sound foundation for field-applied topcoats despite prolonged exposure during construction.

I. Galvanize all exterior steel members to comply with ASTM A123/A123M. Provide minimum 1.7 oz/sq ft galvanized coating.

J. Touch-Up Primer for Galvanized Surfaces: SSPC-Paint 20, Type I - Inorganic, complying with VOC limitations of authorities having jurisdiction.

2.03 FABRICATION

A. Ferrous Metal Surfaces, General:

1. For metal fabrications exposed to view upon completion of the Work: Provide ferrous metals materials selected for their surface flatness, smoothness, and freedom from surface blemishes.

2. Do not use materials whose exposed surfaces exhibit pitting, seam marks, roller marks, rolled trade names, roughness, and, for steel sheet, variations in flatness exceeding those permitted by reference standards for stretcher-leveled sheet.

B. Hot-dip galvanize fabricated ferrous items, indicated as remaining unpainted, after fabrication. Field connections shall be bolted or screwed where possible. Avoid field cutting and welding which damage galvanized coating.

C. Fit and shop assemble items in largest practical sections, for delivery to site.

D. Fabricate items with joints tightly fitted and secured.

E. Gas cutting of non-structural steel items may be acceptable where stress is not transmitted through flame-cut surfaces.
   1. Make cuts clean and to contour.
   2. Deduct 1/8 inch from effective width of members cut by torch.
F. Continuously seal joined members by intermittent welds and plastic filler.
G. Joints Exposed to Weather or Water: Fabricate to keep water out, or provide adequate drainage of water that penetrates.
H. Steel Tubing and Piping Fabrication: Unless otherwise indicated, close ends with plate stock so no exposed ends of tubing and piping. Grind all edges.
I. Connections, General:
   1. Component parts of built-up members shall be well-pinned with closely-fitted contact.
   2. Conceal connections where possible.
   3. Otherwise, make countersinks for concealment after fabrication, except where noted.
J. Welding: Conform to AWS D1.1/D1.1M recommendations.
   1. Do not field weld galvanized components to remain unfinished.
   2. Provide continuous welds at welded corners and seams.
   3. Grind exposed welds smooth and flush with base material.
   4. Re-weld to fill holes. Putties and fillers are not acceptable.
K. Grind exposed joints flush and smooth with adjacent finish surface. Make exposed joints butt tight, flush, and hairline. Ease exposed edges to small uniform radius.
L. Exposed Mechanical Fastenings: Flush countersunk screws or bolts; unobtrusively located; consistent with design of component, except where specifically noted otherwise.
   1. Bolted and Screwed Connections:
      a. Provide holes and connections for work specified in other Sections.
      b. Use bolts for field connections only.
      c. Provide washers under heads and nuts bearing on wood.
      d. Draw all nuts tight and nick threads of permanent connections.
      e. Use beveled washers where bearing is on sloped surfaces.
      f. Where screws must be used for permanent connections in ferrous metal, use flat head type, countersunk, with screw slots filled and finished smooth and flush.
M. Furnish components required for anchorage of fabrications. Fabricate anchors and related components of same material and finish as fabrication, except where specifically noted otherwise.

2.04 FABRICATED ITEMS

A. Rough Hardware
   1. Provide bent or otherwise custom fabricated bolts, plates, anchors, hangers, dowels, and other miscellaneous steel and iron shapes as indicated on Drawings.
B. Other Products and Fabrications

1. Other Products and Fabrications: Provide all materials not specifically described but required for a complete and proper installation, as selected by the Contractor, subject to review and acceptance by District Representative and Architect.

C. Slotted Channel Framing: Fabricate channels and fittings from structural steel complying with the referenced standards; electro-galvanized per ASTM B633 Type III, SC 1 finish.

D. Plumbing Security Cage:

1. Basis of Design: Sentry Maximum Security Cage as manufactured by D&M Manufacturing, Inc. (www.backflowtheft.com); or equal.
2. Placer Waterworks: placerwaterworks.com
3. Substitutions: See Section 01 60 00 - Product Requirements.
4. Components:
   a. 3/16 inch Welded Angle Iron Frame.
   b. High Security ¾ inch Steel Pin Hinges.
   c. 9 Gauge Diamond Mesh.
   d. Zinc Primed.
   e. Finish: Powder Coated.
   f. Security Closure Blocks
   g. Lock Guard.
   h. Epoxy ready frame.

2.05 POST INSTALLED CONCRETE ANCHORS

A. Manufacturers:

1. Manufacturers: Provide products as indicated on the approved Structural Drawings.
2. Substitutions: Substitutions of products from manufacturer's not listed are not permitted.
   a. Substitution of structural anchors requires structural calculations and DSA approval.

B. Materials:

1. Conform to Code Evaluation Report, ACI 355.4, DSA IR 17-11, and DSA IR 22-2.
2. Interior Use: For use in conditioned environments free from potential moisture, provide zinc plated carbon steel anchors.
3. Exterior Use:
   a. In exposed or potentially wet environments, and for attachment of exterior cladding materials, provide stainless steel anchors.
   b. Stainless steel nuts and washers shall be of matching alloy group of equal or greater strength than the rod.
   c. Avoid installing stainless steel anchors in contact with galvanically dissimilar metals.
4. Deformed Reinforcing Bars: Deformed steel rebar conforming to ASTM A615/A615M Grade 60. Permissible sizes as described in each adhesive products ICC report.

C. Mechancial Anchors:

1. Expansion, screw or undercut anchors having current ICC approval for use in cracked and uncracked concrete, with a published ICC Evaluation Service report.
    a. Type and size as indicated on drawings.
2. Basis of Design Approved Products conforming to this specification are acceptable for anchoring to concrete are as indicated on Drawings:
    a. Hilti, Inc. Tulsa, OK; Hilti Kwik Bolt TZ2 Carbon and Stainless Steel Anchors in Cracked and Uncracked Concrete (ICC Report ESR-4266); www.us.hilti.com.

D. Adhesive Anchors:
1. Cartridge Injection Adhesive Anchors: Threaded carbon steel rod, inserts, or reinforcing dowels complete with required nuts, washers, adhesive system and manufacturer's installation instructions.
    a. Type and size as indicated on drawings.
    b. Current ICC approval for use in cracked and uncracked concrete with a published ICC Evaluation Service report required.
2. Interior Use: Unless otherwise indicated on the Drawings, provide:
    a. Carbon steel threaded rods conforming to specification as indicated on structural drawings. Where no specification and grade are indicated, provide: ASTM A193/A193M Type B7 with zinc plating in accordance with ASTM B633, Type III Fe/Zn 5 (SC1).
3. Exterior Use: As indicated on the Drawings, provide stainless steel anchors.
    a. Stainless steel anchors shall be AISI Type 304 and Type 316 stainless steel provided with stainless steel nuts and washers of matching alloy group and minimum proof stress equal to or greater than the specified minimum full-size tensile strength of the externally threaded fastener.
    b. All nuts shall conform to ASTM F594, unless otherwise specified.
4. Basis of Design Approved Products conforming to this specification are acceptable for anchoring to concrete are as indicated on Drawings:

E. Power-Driven/Powder Actuated Fasteners
1. Use only if approved by Architect, generally not permitted where not specifically indicated or in load-bearing installations; as indicated on Drawings.
    a. Substitutions: See Section 01 60 00 - Product Requirements.

2.06 FINISHES - STEEL

A. Mechanical Finishes: Complete finishing prior to fabrication wherever possible.
1. After fabrication, finish all joints, bends, abrasions, and other surface blemishes to match finish.
2. Protect finish on exposed surfaces by using temporary protective covering.

B. Prime paint steel items.
1. Exceptions: Galvanize items to be embedded in concrete.
2. Exceptions: Do not prime surfaces in direct contact with concrete, where field welding is required, and items to be covered with sprayed fireproofing.

C. Prepare surfaces to be primed in accordance with SSPC-SP2.
   1. Exterior fabrications: Clean in accordance with SSPC-SP 5, SSPC-SP 6, 8, or SSPC-SP 10.
   2. Interior fabrications: Clean in accordance with SSPC-SP 2, SSPC-SP 3, SSPC-SP 5, SSPC-SP 6, 8, or SSPC-SP 10.
D. Clean surfaces of rust, scale, grease, and foreign matter prior to finishing.
E. Prime Painting: One coat.
F. Galvanizing of Structural Steel Members: Galvanize all exterior steel members after fabrication to ASTM A123/A123M requirements. Provide minimum 1.7 oz/sq ft galvanized coating.
G. Galvanizing of Non-structural Items: Galvanize all exterior steel membersafter fabrication to ASTM A123/A123M requirements.

2.07 FABRICATION TOLERANCES

A. Squareness: 1/8 inch maximum difference in diagonal measurements.
B. Maximum Offset Between Faces: 1/16 inch.
C. Maximum Misalignment of Adjacent Members: 1/16 inch.
D. Maximum Bow: 1/8 inch in 48 inches.
E. Maximum Deviation From Plane: 1/16 inch in 48 inches.
F. Punch, drill and reaming in manner to leave clean, true lines and surfaces.
   1. Oversize hole 1/16 inch by punching, when material thickness is equal to or less than bolt diameter plus 1/8 inch.
   2. Sub-punch 1/16 inch smaller than bolt and drill or ream to oversize by 1/16 inch, when material thickness is thicker than bolt diameter plus 1/8 inch.

PART 3 EXECUTION

3.01 EXAMINATION

A. Verify that field conditions are acceptable and are ready to receive work.
B. Field Inspection of Fabricated Products: Prior to installation, inspect products for damage and verify markings and dimensions against reviewed submittals.
C. Environmental Conditions: Do not install products intended for interior locations when spaces are uncovered and unprotected from inclement weather.
D. Coordination: Coordinate metal fabrications Work with Work specified in other Sections so that related Work shall be accurately and properly joined.
E. Post Installed Anchors
   1. Verification of Conditions
      a. Base Material Strength: Unless otherwise specified, do not drill holes in concrete until concrete has achieved full design strength.
      b. Temperature of concrete surface and ambient air temperature must meet manufacturer’s requirements prior to use of adhesive anchor products.
      c. Embedded Items:

1) Identify position of reinforcing steel and other embedded items prior to drilling holes for anchors.
2) Exercise care in coring or drilling to avoid damaging existing reinforcing or embedded items.
3) Take precautions as necessary to avoid damaging anything embedded in the concrete including electrical/telecommunications conduit and plumbing pipes.
4) Notify the Architect if reinforcing steel or other embedded items are encountered during drilling.

d. Beginning of installation indicates acceptance of existing conditions.

3.02 PREPARATION

A. Clean and strip primed steel items to bare metal where site welding is required.

B. Supply setting templates to the appropriate entities for steel items required to be cast into concrete.

C. Make provision for erection loads with temporary bracing. Keep work in alignment.

D. Obtain Architect's review prior to site cutting or making adjustments not indicated on Drawings and reviewed shop drawings.

3.03 INSTALLATION

A. Install items plumb and level, accurately fitted, free from distortion or defects.

B. Provide for erection loads, and for sufficient temporary bracing to maintain true alignment until completion of erection and installation of permanent attachments.

C. Field weld components as indicated on drawings.

D. Perform field welding in accordance with AWS D1.1/D1.1M.

E. Obtain approval prior to site cutting or making adjustments not scheduled.

F. After erection, prime welds, abrasions, and surfaces not shop primed , except surfaces to be in contact with concrete.

1. Touch up galvanized steel with cold galvanizing compound.

3.04 INSTALLATION OF POST-INSTALLED ANCHORS

A. Installation shall comply with all manufacturer’s instructions and current ICC ESR report.

B. Post-Installed Anchors in Hardened Concrete.

1. Drilled-in anchors and/or powder driven pins in existing non-prestressed reinforced concrete: use care and caution to avoid cutting or damaging the existing reinforcing bars.
2. Maintain a minimum clearance of one inch between the reinforcement and the drilled-in anchor and/or pin.

C. Manufacturer shall provide on-site training for all personnel who will be installing post-installed adhesive anchors at the beginning of the work. Installation of anchors must be performed by a certified installer.

D. Where manufacturer recommends use of special tools for installation of anchors, such tools shall be used, unless otherwise permitted specifically by the Engineer.

E. Drill holes with rotary impact hammer drills using carbide-tipped bits. Bits must be of type required and permitted by ICC ESR report.
   1. Drill holes with rotary impact hammer drills using carbide-tipped bits or core drills using diamond core bits.
   2. Drill bits shall be of diameters as specified by the anchor manufacturer.
   3. Unless otherwise shown on the Drawings, all holes shall be drilled perpendicular to the concrete surface.
   4. Where anchors are to be installed in cored holes, use core bits with matched tolerances as specified by the manufacturer.
   5. Cored holes may only be used if acceptable to the Engineer and in compliance with ICC ESR report.

F. Holes shall be cleared of debris after holes are drilled per manufacturer's instructions.
   1. For adhesive installations, at a minimum, holes shall be blown out with oil-free compressed air and shall be brushed with a wire or nylon brush.
   2. Holes shall than be blown out one additional time with oil-free compressed air.
   3. Additional hole cleaning requirements may be required by manufacturer and ICC ESR Report.

G. During adhesive curing time period, the temperature of the substrate shall be kept above the minimum substrate temperature as defined by the manufacturer. Contractor shall determine the appropriate means and methods to ensure that the temperature is kept above the required minimum temperature required before adhesive installation is begun.

3.05 TOLERANCES

A. Maximum Variation From Plumb: 1/4 inch per story, non-cumulative.

B. Maximum Offset From True Alignment: 1/4 inch.

C. Maximum Out-of-Position: 1/4 inch.

3.06 FIELD QUALITY CONTROL

A. An independent testing agency will perform field quality control tests, as specified in Section 01 45 33 - Code-Required Special Inspections and Procedures.

B. Inspection: Special inspection of post-installed anchors shall be provided as required by the ICC-ES report for that anchor and not less than the requirements of the Structural Drawings and the following (whichever is the most restrictive):
   1. Continuously observe the installation of all anchors, or as specified in the ICC report.
      a. Minimum anchor embedments, proof loads and torques shall be as shown on the Drawings.
      b. Load Testing: Per Structural General Notes on Drawings.
      c. Verify anchor type, anchor dimensions, hole dimensions, anchor spacing, edge distances, anchor embedment and adherence to the manufacturer's published installation instructions.
      d. For adhesive anchors also verify hole cleaning technique, adhesive expiration date and proper mixing and dispensing.

2. Subsequent inspection of installation will be required when there is a change of personnel doing the installation. Change is defined as any one or more persons drilling or preparing holes, or installing anchors.
3. Visually inspect 100% of all installed anchors.

C. Reporting:

1. Daily reports shall reference the applicable ICC-ES report number, indicate that all specified criteria were complied with and provide itemized verification of all inspected items.
2. Special Inspector shall immediately report any deviations from the requirements to the Architect.

D. Defective Work:

1. Installations that are not accepted by the Special Inspector shall be considered defective.
2. Provide additional testing and inspection to determine acceptability of defective work, as directed by the Architect at Contractor's expense.

3.07 REPAIR OF DEFECTIVE WORK

A. Remove and replace misplaced, defective or malfunctioning anchors at Contractor's expense. Replacement of anchors requires signed structural detail, unless otherwise noted.

B. Fill empty anchor holes and patch failed anchor locations with high-strength, non-shrink non-metallic grout.

END OF SECTION

SECTION 05 52 13
PIPE AND TUBE RAILINGS

PART 1 GENERAL

1.01 SECTION INCLUDES

A. Free-standing railings at steps or ramps.

1.02 RELATED REQUIREMENTS

A. Section 05 50 00 - Metal Fabrications: Embedded items, welding and shop painting.

B. Section 09 91 13 - Exterior Painting: Paint finish.

1.03 REFERENCE STANDARDS

A. ADA Standards - 2010 ADA Standards for Accessible Design.

B. ASTM A123/A123M - Standard Specification for Zinc (Hot-Dip Galvanized) Coatings on Iron and Steel Products.

C. ASTM A500/A500M - Standard Specification for Cold-Formed Welded and Seamless Carbon Steel Structural Tubing in Rounds and Shapes.

D. ASTM A780/A780M - Standard Practice for Repair of Damaged and Uncoated Areas of Hot-Dip Galvanized Coatings.

E. ASTM E935 - Standard Test Methods for Performance of Permanent Metal Railing Systems and Rails for Buildings.

F. AWS A2.4 - Standard Symbols for Welding, Brazing, and Nondestructive Examination.

G. AWS B2.1/B2.1M - Specification for Welding Procedure and Performance Qualification.

H. AWS D1.1/D1.1M - Structural Welding Code - Steel.

I. NAAMM AMP 521 - Pipe Railing Systems Manual.

J. SSPC-PA 1 - Shop, Field, and Maintenance Painting of Steel.

K. SSPC-Paint 20 - Zinc-Rich Primers (Type I, "Inorganic," and Type II, "Organic").

1.04 SUBMITTALS

A. See Section 01 30 00 - Administrative Requirements, for submittal procedures.

B. Shop Drawings: Indicate profiles, sizes, connection attachments, anchorage, size and type of fasteners, and accessories.

1. Indicate welded connections using standard AWS A2.4 welding symbols. Indicate net weld lengths.
2. Prepare shop drawings for all railing systems, including attachment.
3. Conform to AISC Standards, except provisions for approval/responsibility for dimensions by Architect and structural engineer shall not apply.
4. Include erection drawings, elevations, and details where applicable.

5. Indicate welded connections using standard AWS welding symbols. Indicate net weld lengths.

C. Welders' Qualification Statement: Welders' certificates in accordance with AWS B2.1/B2.1M and dated within the previous 12 months.

D. Fabricator's Qualification Statement.

1.05 QUALITY ASSURANCE

A. Welder Qualifications: Welding processes and welding operators qualified within previous 12 months.

B. Fabricator Qualifications:

1. A company specializing in manufacturing products specified in this section, with not less than ten years of documented experience.

C. Coordination: Provide templates and sleeves for incorporation of embedded items into the work specified elsewhere herein.

1.06 DELIVERY, STORAGE AND HANDLING

A. Delivery, Storage and Handling, General: Protect products from deformation, marring, discoloration, soiling and corrosion.

B. Storage: Store products in enclosed, well-ventilated spaces, not in contact with soil or vegetation and not subject to inclement weather.

PART 2 PRODUCTS

2.01 RAILINGS - GENERAL REQUIREMENTS

A. Regulatory Requirements: Conform to California Building Code (CBC), Title 24, Part 2, Section 11B-505 and 11B-405.8 as amended and adopted by authorities having jurisdiction.

1. Top of gripping surfaces of handrails shall be 34 inches minimum and 38 inches maximum vertically above walking surfaces, stair nosings, and ramp surfaces. Handrails shall be at a consistent height above such surfaces.

2. Clearance between handrail gripping surfaces and adjacent surfaces shall be 1-1/2 inches minimum.

a. Handrail may be located in a recess if the recess is 3 inches maximum deep and 18 inches minimum clear above the top of the handrail.

3. Handrail gripping surfaces shall be continuous along their length and shall not be obstructed along their tops or sides. The bottoms of handrail gripping surfaces shall not be obstructed for more than 20% of their length.

a. Where provided, horizontal projections shall occur 1-1/2 inches minimum below the bottom of the handrail gripping surfaces.

4. Handrail gripping surfaces with a circular cross section shall have an outside diameter of 1-1/4 inch minimum and 2 inches maximum.

5. Handrail gripping surfaces with a non-circular cross section shall have an outside dimension of 4 inches minimum and 6-1/4 inches maximum, and a cross-sectional dimension of 2-1/4 inches maximum.

6. Handrail gripping surfaces and any surfaces adjacent to them shall be free of sharp or abrasive elements and shall have rounded edges.
7. Handrails shall not rotate within their fittings.
8. Handrail gripping surfaces shall extend beyond and in the same direction of stair flights and ramp runs in accordance with CBC Section 11B-505.10.
    a. Such extensions are not required for continuous handrails at the inside turn of switchback or dogleg stairs and ramps.
9. A 2 inch minimum high curb or a barrier shall be provided to prevent the passage of a 4 inch diameter sphere rolling off the sides of a ramp surface.
    a. Such a curb or barrier shall be continuous and uninterrupted along the length of a ramp. CBC Section 11B-405.9.2

B. Design, fabricate, and test railing assemblies in accordance with the most stringent requirements of applicable local code.

C. Distributed Loads: Design railing assembly, wall rails, and attachments to resist distributed force of 75 pounds per linear foot applied to the top of the assembly and in any direction, without damage or permanent set. Test in accordance with ASTM E 935.

D. Concentrated Loads: Design railing assembly, wall rails, and attachments to resist a concentrated force of 200 pounds applied at any point on the top of the assembly and in any direction, without damage or permanent set. Test in accordance with ASTM E 935.
    1. Infill Area and Intermediate Rails: Resist a minimum horizontal concentrated load of 200 LBF applied to one square foot at any point in the system, including panels, intermediate rails balusters, or other elements composing the infill area.

E. Allow for expansion and contraction of members and building movement without damage to connections or members.

F. Dimensions: See drawings for configurations and heights.

G. Provide anchors and other components as required to attach to structure, made of same materials as railing components unless otherwise indicated; where exposed fasteners are unavoidable provide flush countersunk fasteners.

H. Provide welding fittings to join lengths, seal open ends, and conceal exposed mounting bolts and nuts, including but not limited to elbows, T-shapes, splice connectors, flanges, escutcheons, and wall brackets.

2.02 STEEL RAILING SYSTEM

A. Steel Tube: ASTM A500/A500M, Grade B cold-formed welded or seamless structural tubing.

B. Welding Fittings: Factory- or shop-welded from matching pipe or tube; seams continuously welded; joints and seams ground smooth.

C. Exposed Fasteners: No exposed bolts or screws.

D. Galvanizing: In accordance with requirements of ASTM A123/A123M.
    1. Touch-Up Primer for Galvanized Surfaces: SSPC-Paint 20 Type I - Inorganic.

2.03 FABRICATION

A. Fabricate railings in accordance with NAAMM AMP 521 and as required for specified design requirements. Provide stock and tubing and manufactured components sized and arranged as indicated on Drawings and specified herein.

B. Accurately form components to suit specific project conditions and for proper connection to building structure.

1. Prior to fabrication, field verify dimensions and details of construction. Immediately report variances in writing to Architect.

C. Fit and shop assemble components in largest practical sizes for delivery to site.

D. Fabricate components with joints tightly fitted and secured.

E. Welded Joints:

1. Exterior Components (Type 2): Continuously seal joined pieces by continuous welds. Drill condensate drainage holes at bottom of members at locations that will not encourage water intrusion.

2. Grind exposed joints flush and smooth with adjacent finish surface. Make exposed joints butt tight, flush, and hairline. Ease exposed edges to small uniform radius (1/8 inch).

F. Weld connections that cannot be shop welded due to size limitations.

1. Weld in accordance with AWS D1.1/D1.1M.

2. Match shop welding and bolting.

3. Clean welds, bolted connections, and abraded areas.

4. Touch up shop primer and factory-applied finishes.

5. Repair galvanizing with galvanizing repair paint per ASTM A780/A780M.

PART 3 EXECUTION

3.01 EXAMINATION

A. Verify that field conditions are acceptable and are ready to receive work.

B. Coordination: Coordinate fabrication and installation of steel pipe and tube railings so that related Work accurately and properly join.

3.02 PREPARATION

A. Obtain Architect's review prior to site cutting or making adjustments not indicated on shop drawings.

B. Clean and strip primed steel items to bare metal where site welding is required.

3.03 INSTALLATION

A. Install in accordance with manufacturer's instructions.

B. Install components plumb and level, accurately fitted, free from distortion or defects, with tight joints.

C. Install railings in compliance with CBC 11B and ADA Standards for accessible design at applicable locations.

D. Anchor railings securely to structure.

E. Field weld anchors as indicated on drawings. Touch-up welds with primer. Grind welds smooth.

F. Guardrails Installation: Install railings plumb and level, accurately fitted, free from distortion or defects.

1. Plumb posts in each direction.
2. Temporarily install sections and align before securing sections together.
3. Fully weld all joints and grind smooth as for shop welding.
4. Perform field welding in accordance with AWS D1.1/D1.1M.

G. Wall Railings Installation, General: Secure handrails to wall with wall brackets and end return fittings.

1. Provide brackets with 1-1/2 inch clearance from inside face of handrail and finished wall surface.
2. Locate brackets as indicated, or if not indicated, at spacing required to support structural loads.
3. Secure wall brackets to building construction as specified below.
   a. Secure railing to bracket with pre-drilled hole for exposed bolt anchorage.
   b. Railing ends: None. Return railings to within 1/4 inch of wall face and provide handrail bracket within 12 inches of end of railing.
   c. Securing Railings to Wood Stud Framed Walls as Applicable: Anchor brackets and fittings directly to minimum 4 x framing, or minimum 2 x solid blocking with wood screws or lag bolts as specified in Section 05 50 00 - Metal Fabrications.

3.04 TOLERANCES

A. Code required dimensions indicated on Drawings as minimum or maximum are absolute. No tolerances are allowed less or more than this dimension.

B. Maximum Variation From Plumb: 1/4 inch per floor level, non-cumulative.

C. Maximum Offset From True Alignment: 1/4 inch.

D. Maximum Out-of-Position: 1/4 inch.

3.05 CLEANING AND PROTECTION

A. Galvanizing Repair Compound:

1. If finish is to be painted or is otherwise not visible, field repair with premixed cold galvanizing compound for field touch-up of galvanized coatings.
2. Where the finish is galvanized, resend to galvanizing for reapplication, if practical (e.g.; bolted components) and accepted by Architect.

B. Finish Touch-Up:

1. Immediately after installation, clean field welds, bolted connections, and abraded areas of shop paint, and paint exposed areas with same material as used for shop painting to comply with SSPC-PA 1 requirements for touch-up of field painted surfaces.
2. Apply paint by brush or spray to provide a minimum dry film thickness of 2.0 mils.

C. Cleaning:

1. Clean and dress all field welds, bolted connections, and abraded areas of galvanizing or shop paint on miscellaneous metal.

END OF SECTION

SECTION 06 10 53
MISCELLANEOUS ROUGH CARPENTRY

PART 1 GENERAL

1.01 SECTION INCLUDES

A. Communications and electrical room mounting boards.

B. Concealed wood blocking, nailers, and supports.

C. Miscellaneous wood nailers, furring, and grounds.

1.02 RELATED REQUIREMENTS

A. Section 01 61 16 - Volatile Organic Compound (VOC) Content Restrictions.

1.03 REFERENCE STANDARDS

A. ASTM A153/A153M - Standard Specification for Zinc Coating (Hot-Dip) on Iron and Steel Hardware.

B. ASTM A653/A653M - Standard Specification for Steel Sheet, Zinc-Coated (Galvanized) or Zinc-Iron Alloy-Coated (Galvannealed) by the Hot-Dip Process.

C. ASTM C557 - Standard Specification for Adhesives for Fastening Gypsum Wallboard to Wood Framing.

D. ASTM D3498 - Standard Specification for Adhesives for Field-Gluing Wood Structural Panels (Plywood or Oriented Strand Board) to Wood Based Floor System Framing.

E. ASTM E84 - Standard Test Method for Surface Burning Characteristics of Building Materials.

F. AWPA U1 - Use Category System: User Specification for Treated Wood.

G. PS 1 - Structural Plywood.

H. PS 20 - American Softwood Lumber Standard.

I. WCLIB (GR) - Standard Grading Rules for West Coast Lumber No. 17.

1.04 SUBMITTALS

A. See Section 01 30 00 - Administrative Requirements for submittal procedures.

B. Product Data: Provide technical data on wood preservative materials and application instructions.

C. Warranty Documentation: Submit manufacturer warranty and ensure that forms have been completed in District's name and registered with manufacturer.

1.05 DELIVERY, STORAGE, AND HANDLING

A. General: Cover wood products to protect against moisture. Support stacked products to prevent deformation and to allow air circulation.

1.06 WARRANTY

A. See Section 01 78 00 - Closeout Submittals for additional warranty requirements.

B. Correct defective work within a two-year period commencing on Date of Substantial Completion.

PART 2 PRODUCTS

2.01 GENERAL REQUIREMENTS

A. Dimension Lumber: Comply with PS 20 and requirements of specified grading agencies.

1. If no species is specified, provide species graded by the agency specified; if no grading agency is specified, provide lumber graded by grading agency meeting the specified requirements.
2. Grading Agency: Grading agency whose rules are approved by the Board of Review, American Lumber Standard Committee (www.alsc.org) and who provides grading service for the species and grade specified; provide lumber stamped with grade mark unless otherwise indicated.

2.02 DIMENSION LUMBER FOR CONCEALED APPLICATIONS

A. Grading Agency: West Coast Lumber Inspection Bureau; WCLIB (GR).

B. Sizes: Nominal sizes as indicated on drawings, S4S.

C. Moisture Content: S-dry or MC19.

D. Miscellaneous Framing, Blocking, Nailers, Grounds, and Furring:

1. Lumber: S4S, No.2 or Standard Grade.
2. Boards: Standard or No.3.

2.03 CONSTRUCTION PANELS

A. Communications and Electrical Room Mounting Boards: PS 1, A-C plywood, or medium density fiberboard; 3/4 inch thick; flame spread index of 25 or less, smoke developed index of 450 or less, when tested in accordance with ASTM E84.

B. Other Applications:

1. Plywood Concealed From View But Located Within Exterior Enclosure: PS 1, C-C Plugged or better, Exterior grade.
2. Plywood Exposed to View But Not Exposed to Weather: PS 1, A-D, or better.
3. Other Locations: PS 1, C-D Plugged or better.

2.04 ACCESSORIES

A. Fasteners and Anchors:

1. Metal and Finish: Hot-dipped galvanized steel complying with ASTM A153/A153M for high humidity and preservative-treated wood locations, unfinished steel elsewhere.
2. Anchors: Bolt or ballistic fastener for anchorages to steel.

B. Die-Stamped Connectors: Hot dipped galvanized steel, sized to suit framing conditions.

1. For contact with preservative treated wood in exposed locations, provide minimum G185 galvanizing complying with ASTM A653/A653M.

C. Construction Adhesives: Adhesives complying with ASTM C557 or ASTM D3498.

2.05 FACTORY WOOD TREATMENT

A. Treated Lumber and Plywood: Comply with requirements of AWPA U1 - Use Category System for wood treatments determined by use categories, expected service conditions, and specific applications.

PART 3 EXECUTION

3.01 PREPARATION

A. Coordinate installation of rough carpentry members specified in other sections.

3.02 INSTALLATION - GENERAL

A. Select material sizes to minimize waste.

B. Reuse scrap to the greatest extent possible; clearly separate scrap for use on site as accessory components, including: shims, bracing, and blocking.

C. Where treated wood is used on interior, provide temporary ventilation during and immediately after installation sufficient to remove indoor air contaminants.

3.03 BLOCKING, NAILERS, AND SUPPORTS

A. Provide framing and blocking members as indicated or as required to support finishes, fixtures, specialty items, and trim.

B. In walls, provide blocking attached to studs as backing and support for wall-mounted items, unless item can be securely fastened to two or more studs or other method of support is explicitly indicated.

C. Where ceiling-mounting is indicated, provide blocking and supplementary supports above ceiling, unless other method of support is explicitly indicated.

3.04 ROOF-RELATED CARPENTRY

A. Coordinate installation of roofing carpentry with deck construction, framing of roof openings, and roofing assembly installation.

B. Provide wood curb at roof openings except where prefabricated curbs are specified and where specifically indicated otherwise. Form corners by alternating lapping side members.

3.05 INSTALLATION OF CONSTRUCTION PANELS

A. Communications and Electrical Room Mounting Boards: Secure with screws to studs with edges over firm bearing; space fasteners at maximum 24 inches on center on edges and into studs in field of board.

1. Where boards are indicated as full floor-to-ceiling height, install with long edge of board parallel to studs.
2. Install adjacent boards without gaps.

3.06 CLEANING

A. Waste Disposal: See Section 01 74 19 - Construction Waste Management and Disposal.

1. Comply with applicable regulations.
2. Do not burn scrap on project site.

3. Do not burn scraps that have been pressure treated.
4. Do not send materials treated with pentachlorophenol, CCA, or ACA to co-generation facilities or “waste-to-energy” facilities.

B. Do not leave wood, shavings, sawdust, etc. on the ground or buried in fill.

C. Prevent sawdust and wood shavings from entering the storm drainage system.

END OF SECTION

SECTION 07 92 00
JOINT SEALANTS

PART 1 GENERAL

1.01 SECTION INCLUDES

A. Nonsag gunnable joint sealants.

B. Self-leveling pourable joint sealants.

C. Joint backings and accessories.

D. District-provided field quality control.

1.02 REFERENCE STANDARDS

A. ASTM C661 - Standard Test Method for Indentation Hardness of Elastomeric-Type Sealants by Means of a Durometer.

B. ASTM C794 - Standard Test Method for Adhesion-in-Peel of Elastomeric Joint Sealants.

C. ASTM C834 - Standard Specification for Latex Sealants.

D. ASTM C919 - Standard Practice for Use of Sealants in Acoustical Applications.

E. ASTM C920 - Standard Specification for Elastomeric Joint Sealants.

F. ASTM C1087 - Standard Test Method for Determining Compatibility of Liquid-Applied Sealants with Accessories Used in Structural Glazing Systems.

G. ASTM C1193 - Standard Guide for Use of Joint Sealants.

H. ASTM C1248 - Standard Test Method for Staining of Porous Substrate by Joint Sealants.

I. ASTM C1311 - Standard Specification for Solvent Release Sealants.

J. ASTM C1330 - Standard Specification for Cylindrical Sealant Backing for Use with Cold Liquid-Applied Sealants.

K. ASTM C1521 - Standard Practice for Evaluating Adhesion of Installed Weatherproofing Sealant Joints.

L. ASTM D2240 - Standard Test Method for Rubber Property--Durometer Hardness.

M. SCAQMD 1168 - Adhesive and Sealant Applications.

N. SWRI (VAL) - SWR Institute Validated Products Directory.

1.03 SUBMITTALS

A. See Section 01 30 00 - Administrative Requirements for submittal procedures.

B. Product Data: Submit manufacturer's technical datasheets for each product to be used; include the following:

1. Physical characteristics, including movement capability, VOC content, hardness, cure time, and color availability.
2. List of backing materials approved for use with the specific product.
3. Substrates that product is known to satisfactorily adhere to and with which it is compatible.

4. Substrates the product should not be used on.
5. Substrates for which use of primer is required.
6. Substrates for which laboratory adhesion and/or compatibility testing is required.
7. Installation instructions, including precautions, limitations, and recommended backing materials and tools.
8. Sample product warranty.
9. Certification by manufacturer indicating that product complies with specification requirements.
10. SWRI Validation: Provide currently available sealant product validations as listed by SWRI (VAL) for specified sealants.

C. Product Data for Accessory Products: Submit manufacturer's technical data sheet for each product to be used, including physical characteristics, installation instructions, and recommended tools.

D. Color Cards for Selection: Where sealant color is not specified, submit manufacturer's color cards showing standard colors available for selection.

E. Samples for Verification: Where custom sealant color is specified, obtain directions from Architect and submit at least two physical samples for verification of color of each required sealant.

F. Preconstruction Laboratory Test Reports: Submit at least four weeks prior to start of installation.

G. Installation Plan: Submit at least four weeks prior to start of installation.

H. Preinstallation Field Adhesion Test Plan: Submit at least two weeks prior to start of installation.

I. Field Quality Control Plan: Submit at least two weeks prior to start of installation.

J. Preinstallation Field Adhesion Test Reports: Submit filled out Preinstallation Field Adhesion Test Reports log within 10 days after completion of tests; include bagged test samples and photographic records.

K. Installation Log: Submit filled-out log for each length or instance of sealant installed.

L. Field Quality Control Log: Submit filled-out log for each length or instance of sealant installed, within 10 days after completion of inspections/tests; include bagged test samples and photographic records, if any.

M. Manufacturer's qualification statement.

N. Installer's qualification statement.

O. Executed warranty.

1.04 QUALITY ASSURANCE

A. Maintain one copy of each referenced document covering installation requirements on site.

B. Manufacturer Qualifications: Company specializing in manufacturing the products specified in this section with minimum three years documented experience.

C. Installer Qualifications: Company specializing in performing the work of this section and with at least three years of documented experience.

D. Preconstruction Laboratory Testing: Arrange for sealant manufacturer(s) to test each combination of sealant, substrate, backing, and accessories.
   1. Adhesion Testing: In accordance with ASTM C794.
   2. Compatibility Testing: In accordance with ASTM C1087.
   3. Allow sufficient time for testing to avoid delaying the work.
   4. Deliver sufficient samples to manufacturer for testing.
   5. Report manufacturer's recommended corrective measures, if any, including primers or techniques not indicated in product data submittals.
   6. Testing is not required if sealant manufacturer provides data showing previous testing, not older than 24 months, that shows satisfactory adhesion, lack of staining, and compatibility.

E. Installation Plan: Include schedule of sealed joints, including the following:
   1. Joint width indicated in Contract Documents.
   2. Joint depth indicated in Contract Documents; to face of backing material at centerline of joint.
   3. Method to be used to protect adjacent surfaces from sealant droppings and smears, with acknowledgment that some surfaces cannot be cleaned to like-new condition and therefore prevention is imperative.
   4. Approximate date of installation, for evaluation of thermal movement influence.
   5. Installation Log Form: Include the following data fields, with known information filled out.
      a. Unique identification of each length or instance of sealant installed.
      b. Location on project.
      c. Substrates.
      d. Sealant used.
      e. Stated movement capability of sealant.
      f. Primer to be used, or indicate no primer is used.
      g. Size and actual backing material used.
      h. Date of installation.
      i. Name of installer.
      j. Actual joint width; provide space to indicate maximum and minimum width.
      k. Actual joint depth to face of backing material at centerline of joint.
      l. Air temperature.

F. Preinstallation Field Adhesion Test Plan: Include destructive field adhesion testing of one sample of each combination of sealant type and substrate, except interior acrylic latex sealants, and include the following for each tested sample.
   1. Identification of testing agency.
   2. Name(s) of sealant manufacturer's field representatives who will be observing.

3. Preinstallation Field Adhesion Test Log Form: Include the following data fields, with known information filled out.
    a. Substrate; if more than one type of substrate is involved in a single joint, provide two entries on form, for testing each sealant substrate side separately.
    b. Test date.
    c. Location on project.
    d. Sealant used.
    e. Stated movement capability of sealant.
    f. Test method used.
    g. Date of installation of field sample to be tested.
    h. Date of test.
    i. Copy of test method documents.
    j. Age of sealant upon date of testing.
    k. Test results, modeled after the sample form in the test method document.
    l. Indicate use of photographic record of test.

G. District will employ an independent testing agency to perform the field quality control inspection and testing as referenced in PART 3 of this section and as follows, to prepare and submit the field quality control plan and log, and to provide recommendations of remedies in the case of failure.
    1. Contractor shall cooperate with testing agency and repair failures discovered and destructive test location damage.

H. Field Quality Control Plan:
    1. Visual inspection of entire length of sealant joints.
    2. Nondestructive field adhesion testing of sealant joints, except interior acrylic latex sealants.
        a. For each different sealant and substrate combination, allow for one test every 12 inches in the first 10 linear feet of joint and one test every 24 inches thereafter.
        b. If any failures occur in the first 10 linear feet, continue testing at 12 inches intervals at no extra cost to District.
    3. Destructive field adhesion testing of sealant joints, except interior sealant joints.
        a. For each different sealant and substrate combination, allow for one test every 100 feet in the first 1,000 linear feet, and one test per 1,000 linear feet thereafter, or once per floor on each elevation.
        b. If any failures occur in the first 1,000 linear feet, continue testing at frequency of one test per 500 linear feet at no extra cost to District.
    4. Field Quality Control Log Form: Show same data fields as on Preinstallation Field Adhesion Test Log, with known information filled out and lines for multiple tests per sealant/substrate combinations; include visual inspection and specified field testing; allow for possibility that more tests than minimum specified may be necessary.

I. Field Adhesion Test Procedures:

1. Allow sealants to fully cure as recommended by manufacturer before testing.
2. Have a copy of the test method document available during tests.
3. Take photographs or make video records of each test, with joint identification provided in the photos/videos; for example, provide small erasable whiteboard positioned next to joint.
4. Record the type of failure that occurred, other information required by test method, and the information required on the Field Quality Control Log.
5. When performing destructive tests, also inspect the opened joint for proper installation characteristics recommended by manufacturer, and report any deficiencies.
6. Deliver the samples removed during destructive tests in separate sealed plastic bags, identified with project, location, test date, and test results, to District.
7. If any combination of sealant type and substrate does not show evidence of minimum adhesion or shows cohesion failure before minimum adhesion, report results to Architect.

J. Nondestructive Field Adhesion Test: Test for adhesion in accordance with ASTM C1521, using Nondestructive Spot Method.
   1. Record results on Field Quality Control Log.
   2. Repair failed portions of joints.

K. Destructive Field Adhesion Test: Test for adhesion in accordance with ASTM C1521, using Destructive Tail Procedure.
   1. Sample: At least 18 inches long.
   2. Minimum Elongation Without Adhesive Failure: Consider the tail at rest, not under any elongation stress; multiply the stated movement capability of the sealant in percent by two; then multiply 1 inch by that percentage; if adhesion failure occurs before the 1-inch mark is that distance from the substrate, the test has failed.
   3. If either adhesive or cohesive failure occurs before minimum elongation, take necessary measures to correct conditions and retest; record each modification to products or installation procedures.
   4. Record results on Field Quality Control Log.
   5. Repair failed portions of joints.

L. Field Adhesion Tests of Joints: Test for adhesion using most appropriate method in accordance with ASTM C1521, or another applicable method as recommended by manufacturer.

1.05 WARRANTY

A. See Section 01 78 00 - Closeout Submittals for additional warranty requirements.

B. Manufacturer Warranty: Provide 2-year manufacturer warranty for installed sealants and accessories that fail to achieve a watertight seal, exhibit loss of adhesion or cohesion, or do not cure. Complete forms in District's name and register with manufacturer.

C. Extended Correction Period: Correct defective work within 2-year period commencing on Date of Substantial Completion.

PART 2 PRODUCTS

2.01 MANUFACTURERS

A. Nonsag Sealants:

1. Adhesives Technology Corporation: www.atcepoxy.com/#sle.
2. Bostik Inc: www.bostik-us.com/#sle.
3. Dow: www.dow.com/#sle.
4. Franklin International, Inc: www.titebond.com/#sle.
5. Henry Company: www.henry.com/#sle.
6. Hilti, Inc: www.hilti.com/#sle.
7. Master Builders Solutions: www.master-builders-solutions.com/en-us/#sle.
8. Momentive Performance Materials, Inc (formerly GE Silicones): www.momentive.com/#sle.
9. Pecora Corporation: www.pecora.com/#sle.
10. QUIKRETE Companies: www.quikrete.com/#sle.
11. Sherwin-Williams Company: www.sherwin-williams.com/#sle.
12. Sika Corporation: www.usa.sika.com/#sle.
13. Specified Technologies Inc: www.stifirestop.com/#sle.
14. Tremco Commercial Sealants & Waterproofing: www.tremcosealants.com/#sle.
15. W.R. Meadows, Inc: www.wrmeadows.com/#sle.
16. Or Equal Substitutions: See Section 01 60 00 - Product Requirements.

B. Self-Leveling Sealants:

1. Adhesives Technology Corporation: www.atcepoxy.com/#sle.
2. Bostik Inc: www.bostik-us.com/#sle.
3. Dayton Superior Corporation: www.daytonsuperior.com/#sle.
4. Dow: www.dow.com/#sle.
5. Master Builders Solutions: www.master-builders-solutions.com/en-us/#sle.
6. Pecora Corporation: www.pecora.com/#sle.
7. QUIKRETE Companies: www.quikrete.com/#sle.
8. Sherwin-Williams Company: www.sherwin-williams.com/#sle.
9. Sika Corporation: www.usa.sika.com/#sle.
10. Tremco Commercial Sealants & Waterproofing: www.tremcosealants.com/#sle.
11. W.R. Meadows, Inc: www.wrmeadows.com/#sle.
12. Or Equal Substitutions: See Section 01 60 00 - Product Requirements.

2.02 JOINT SEALANT APPLICATIONS

A. Scope:

1. Exterior Joints: Seal open joints, whether or not the joint is indicated on drawings, unless specifically indicated not to be sealed. Exterior joints to be sealed include, but are not limited to:
    a. Wall expansion and control joints.
    b. Joints between door, window, and other frames and adjacent construction.
    c. Joints between different exposed materials.
    d. Openings below ledge angles in masonry.
    e. Other joints indicated below.
2. Interior Joints: Do not seal interior joints unless specifically indicated to be sealed. Interior joints to be sealed include, but are not limited to, the following items.
    a. Joints between door, window, and other frames and adjacent construction.
    b. Control and expansion joints on exposed interior surfaces of exterior walls.
    c. Control and expansion joints in ceilings and other overhead surfaces.
    d. Control and expansion joints in tile.
    e. In sound-rated wall and ceiling assemblies, gaps at electrical outlets, wiring devices, piping, and other openings; between wall/ceiling and other construction; and other flanking sound paths.
        1) Exception: Such gaps and openings in gypsum board finished stud walls and suspended ceilings. See Section 09 21 16 for additional information.
        2) Exception: Through-penetrations in sound-rated assemblies that are also fire-rated.
    f. Other joints indicated below.
3. Do not seal the following types of joints:
    a. Intentional weep holes in masonry.
    b. Joints indicated to be treated with manufactured expansion joint cover, or some other type of sealing device.
    c. Joints where sealant is specified to be provided by manufacturer of product to be sealed.
    d. Joints where installation of sealant is specified in another section.
    e. Joints between suspended panel ceilings/grid and walls.

B. Exterior Joints: Use nonsag nonstaining silicone sealant, unless otherwise indicated.
1. Type SM-1 - Lap Joints in Sheet Metal Fabrications: Butyl rubber, noncuring.
2. Type SM-1 - Lap Joints between Manufactured Metal Panels: Butyl rubber, noncuring.
3. Type CP-1 - Control and Expansion Joints in Concrete Paving: Self-leveling polyurethane traffic-grade sealant.

C. Interior Joints: Use nonsag polyurethane sealant, unless otherwise indicated.
1. Type FS-1 - Joints between Tile in Wet Areas and Floors, Walls, and Ceilings: Mildew-resistant silicone sealant; white.
    a. See Section 09 30 00 for sealing between tile and plumbing fixtures.

2. Type IA-1 - In Sound-Rated Assemblies: Acrylic emulsion latex sealant.

D. Interior Wet Areas: Bathrooms, restrooms, kitchens, food service areas, and food processing areas; fixtures in wet areas include plumbing fixtures, food service equipment, countertops, cabinets, and other similar items.

E. Sound-Rated Assemblies: Walls and ceilings identified as STC-rated, sound-rated, or acoustical.

2.03 JOINT SEALANTS - GENERAL

A. Sealants and Primers: Provide products having lower volatile organic compound (VOC) content than indicated in SCAQMD 1168.

B. Colors: As indicated on drawings.

2.04 NONSAG JOINT SEALANTS

A. Type NS-1 - Nonstaining Silicone Sealant: ASTM C920, Grade NS, Uses M and A; not expected to withstand continuous water immersion or traffic.

1. Movement Capability: Plus and minus 50 percent, minimum.
2. Nonstaining to Porous Stone: Nonstaining to light-colored natural stone when tested in accordance with ASTM C1248.
3. Dirt Pick-Up: Reduced dirt pick-up compared to other silicone sealants.
4. Hardness Range: 15 to 35, Shore A, when tested in accordance with ASTM C661.
5. Color: Match adjacent finished surfaces.
6. Service Temperature Range: Minus 20 to 180 degrees F.
7. Products:
   a. Dow; DOWSIL 756 SMS Building Sealant: www.dow.com/#sle.
   b. Dow; DOWSIL 790 Silicone Building Sealant: www.dow.com/#sle.
   c. Dow; DOWSIL 791 Silicone Weatherproofing Sealant: www.dow.com/#sle.
   d. Dow; DOWSIL 795 Silicone Building Sealant: www.dow.com/#sle.
   e. Momentive Performance Materials, Inc/GE Silicones; SCS9000 SilPruf NB - Non-Staining Silicone Weatherproofing Sealant: www.siliconeforbuilding.com/#sle.
   f. Pecora Corporation; Pecora 890 NST (Non-Staining Technology): www.pecora.com/#sle.
   g. Pecora Corporation; Pecora 864 NST (Non-Staining Technology): www.pecora.com/#sle.
   h. Sika Corporation; Sikasil WS-290: www.usa.sika.com/#sle.
   i. Sika Corporation; Sikasil WS-295: www.usa.sika.com/#sle.
   j. Sika Corporation; Sikasil 728NS: www.usa.sika.com/#sle.
   k. Tremco Commercial Sealants & Waterproofing; Spectrem 1: www.tremcosealants.com/#sle.
   l. Tremco Commercial Sealants & Waterproofing; Spectrem 2: www.tremcosealants.com/#sle.

m. Tremco Commercial Sealants & Waterproofing; Spectrem 3: www.tremcosealants.com/#sle.

n. Tremco Commercial Sealants & Waterproofing; Spectrem 4-TS: www.tremcosealants.com/#sle.

o. Tremco Commercial Sealants & Waterproofing; Tremsil 200: www.tremcosealants.com/#sle.

p. Tremco Commercial Sealants & Waterproofing; Tremsil 400: www.tremcosealants.com/#sle.

q. Or Equal Substitutions: See Section 01 60 00 - Product Requirements.

B. Silicone Sealant: ASTM C920, Grade NS, Uses M and A; not expected to withstand continuous water immersion or traffic.

1. Movement Capability: Plus and minus 25 percent, minimum.
2. Hardness Range: 15 to 35, Shore A, when tested in accordance with ASTM C661.
3. Color: To be selected by Architect from manufacturer's standard range.
4. Cure Type: Single component, neutral moisture curing.
5. Service Temperature Range: Minus 65 to 180 degrees F.
6. Products:

a. Dow; DOWSIL 999-A Building and Glazing Sealant: www.dow.com/#sle.

b. Dow; DOWSIL 758 Silicone Weather Barrier Sealant: www.dow.com/#sle.

c. Henry Company; Moistop Sealant: www.henry.com/#sle.

d. Momentive Performance Materials, Inc/GE Silicones; SCS2000 SilPruf - Silicone Sealant and Adhesive: www.siliconeforbuilding.com/#sle.

e. Momentive Performance Materials, Inc/GE Silicones; SCS2700 SilPruf LM (Low Modulus) - Silicone Weatherproofing Sealant: www.siliconeforbuilding.com/#sle.

f. Momentive Performance Materials, Inc/GE Silicones; SSG4600 UltraGlaze - Silicone Structural Glazing Adhesive: www.siliconeforbuilding.com/#sle.

g. Pecora Corporation; Pecora 860: www.pecora.com/#sle.

h. Pecora Corporation; Pecora 890FTS (Field Tintable Smooth): www.pecora.com/#sle.

i. Pecora Corporation; Pecora 890FTS-TXTR (Field Tintable Textured): www.pecora.com/#sle.

j. Sherwin-Williams Company; Silicone Rubber All Purpose Sealant: www.sherwin-williams.com/#sle.

k. Sika Corporation; Sikasil GP: www.usa.sika.com/#sle.

l. Sika Corporation; Sikasil WS-295: www.usa.sika.com/#sle.

m. Sika Corporation; Sikasil N-Plus US: www.usa.sika.com/#sle.

n. Sika Corporation; Sikasil 728NS: www.usa.sika.com/#sle.

o. Or Equal Substitutions: See Section 01 60 00 - Product Requirements.

C. Type FS-1 - Mildew-Resistant Silicone Sealant: ASTM C920, Grade NS, Uses M and A; single component, mildew resistant; not expected to withstand continuous water immersion or traffic.

1. Color: White.
2. Products:
   a. BASF Construction Chemicals-Building Systems; OmniPlus, by Sonneborn Building Products Div.: www.buildingsystems.basf.com.
   b. Dow Corning Corporation; 786 Silicone Sealant: www.dowcorning.com.
   c. Momentive Performance Materials, Inc (GE Silicones products); Silpruf SCS 1700 Sanitary: www.momentive.com.
   d. Pecora Corporation; Pecora 898 NST (Non-Staining Technology): www.pecora.com/#sle.
   e. Sika Corporation; Sikasil GP: www.usa.sika.com/#sle.
   f. Or Equal Substitutions: See Section 01 60 00 - Product Requirements.

D. Type ST-1 - Hybrid Elastomeric Sealant: ASTM C920, Grade NS, Uses M and A; single component; not expected to withstand continuous water immersion or traffic.
1. Movement Capability: Plus and minus 50 percent, minimum.
2. Hardness Range: 15 to 25, Shore A, when tested in accordance with ASTM C661.
3. Color: To be selected by Architect from manufacturer's full range.
4. Service Temperature Range: Minus 75 to 300 degrees F.
5. Products:
   a. Dow; DOWSIL Contractors Paintable Sealant - CPS: www.dow.com/#sle.
   b. Master Builders Solutions; MasterSeal NP100: www.master-builders-solutions.com/en-us/#sle.
   c. Sherwin-Williams Company; Stampede 100 Low-Modulus Hybrid Urethane Sealant: www.sherwin-williams.com/#sle.
   d. Sherwin-Williams Company; Stampede 1H Hybrid Sealant: www.sherwin-williams.com/#sle.
   e. Tremco Commercial Sealants and Waterproofing; Dymonic FC: www.tremcosealants.com/#sle.
   f. Or Equal Substitutions: See Section 01 60 00 - Product Requirements.

E. Type PS-1 - Polyurethane Sealant: ASTM C920, Grade NS, Uses M and A; single or multi-component; not expected to withstand continuous water immersion or traffic.
1. Movement Capability: Plus and minus 50 percent, minimum.
2. Hardness Range: 20 to 35, Shore A, when tested in accordance with ASTM C661.
3. Color: To be selected by Architect from manufacturer's full range.
4. Service Temperature Range: Minus 40 to 180 degrees F.
5. Products:
   a. Master Builders Solutions; MasterSeal NP1: www.master-builders-solutions.com/en-us/#sle.
   b. Pecora Corporation; DynaTrol II: www.pecora.com/#sle.
   c. Pecora Corporation; DynaFlex: www.pecora.com/#sle.

d. Sherwin-Williams Company; Stampede-1/-TX Polyurethane Sealant: www.sherwin-williams.com/#sle.

e. Sika Corporation; Sikaflex-1a: www.usa.sika.com/#sle.

f. Sika Corporation; Sikaflex-15 LM: www.usa.sika.com/#sle.

g. Tremco Commercial Sealants & Waterproofing; Dymonic 100: www.tremcosealants.com/#sle.

h. Tremco Commercial Sealants & Waterproofing; Dymeric 240 FC: www.tremcosealants.com/#sle.

i. Tremco Commercial Sealants & Waterproofing; Vulkem 116: www.tremcosealants.com/#sle.

j. W. R. Meadows, Inc; POURTHANE NS: www.wrmeadows.com/#sle.

k. Or Equal Substitutions: See Section 01 60 00 - Product Requirements.

F. Type WP-1 - Polyurethane Sealant for Continuous Water Immersion: ASTM C920, Grade NS, Uses M and A; single or multicomponent; explicitly approved by manufacturer for continuous water immersion; suitable for traffic exposure when recessed below traffic surface.

1. Movement Capability: Plus and minus 35 percent, minimum.

2. Hardness Range: 20 to 35, Shore A, when tested in accordance with ASTM C661.

3. Color: To be selected by Architect from manufacturer's standard range.

4. Service Temperature Range: Minus 40 to 180 degrees F.

5. Products:

a. Sika Corporation; Sikaflex-1a: www.usa.sika.com/#sle.

b. Or Equal Substitutions: See Section 01 60 00 - Product Requirements.

G. Nonsag Traffic-Grade Polyurethane Sealant: ASTM C920, Grade NS, Uses M and A; single or multi-component; explicitly approved by manufacturer for continuous water immersion and traffic without the necessity to recess sealant below traffic surface.

1. Movement Capability: Plus and minus 25 percent, minimum.

2. Hardness Range: 20 to 30, Shore A, when tested in accordance with ASTM C661.

3. Color: Match adjacent finished surfaces.

H. Type IA-1 - Acrylic Emulsion Latex: Water-based; ASTM C834, single component, nonstaining, nonbleeding, nonsagging; not intended for exterior use.

1. Color: To be selected by Architect from manufacturer's full range.

2. Grade: ASTM C834; Grade 0 Degrees F (Minus 18 Degrees C).

3. Products:

a. Hilti, Inc; CP 506 Smoke and Acoustical Sealant: www.us.hilti.com/#sle.

b. Hilti, Inc; CP 572 Smoke and Acoustical Spray Sealant: www.us.hilti.com/#sle.

c. Hilti, Inc; Lightweight Smoke and Acoustic Sealant CS-S SA Light: www.us.hilti.com/#sle.

d. Master Builders Solutions; MasterSeal NP 520: www.master-builders-solutions.com/en-us/#sle.

e. OSI Greenseries SC-175 Draft & Acoustical Sound Sealant; www.ositough.com.

f. Pecora Corporation; AC-20 +Silicone: www.pecora.com/#sle.

g. Sherwin-Williams Company; White Lightning 3006 Siliconized Acrylic Latex Caulk: www.sherwin-williams.com/#sle.

h. Sherwin-Williams Company; 850A Acrylic Latex Caulk: www.sherwin-williams.com/#sle.

i. Sherwin-Williams Company; 950A Siliconized Acrylic Latex Caulk: www.sherwin-williams.com/#sle.

j. Sherwin-Williams Company; Bolt Quickdry Siliconized Acrylic Latex Caulk: www.sherwin-williams.com/#sle.

k. Sherwin-Williams Company; Powerhouse Siliconized Acrylic Latex Sealant: www.sherwin-williams.com/#sle.

l. Specified Technologies Inc; Smoke N' Sound Acoustical Sealant: www.stifirestop.com/#sle.

m. Top Gun, a brand of PPG Architectural Coatings; Top Gun 200: www.ppgpaints.com/#sle.

n. Tremco Commercial Sealants & Waterproofing; Tremflex 834: www.tremcosealants.com/#sle.

o. Tremco Commercial Sealants & Waterproofing; Tremstop Smoke and Sound: www.tremcosealants.com/#sle.

p. Tremco Commercial Sealants & Waterproofing; Tremstop Smoke and Sound Spray: www.tremcosealants.com/#sle.

q. Or Equal Substitutions: See Section 01 60 00 - Product Requirements.

2.05 SELF-LEVELING JOINT SEALANTS

A. Self-Leveling Silicone Sealant: ASTM C920, Grade P, Uses M and A; single or multicomponent, explicitly approved by manufacturer for traffic exposure when recessed below traffic surface; not expected to withstand continuous water immersion.

1. Movement Capability: Plus 100 percent, minus 50 percent, minimum.

2. Hardness Range: 0 to 15, Shore A, when tested in accordance with ASTM C661.

3. Color: To be selected by Architect from manufacturer's standard range.

4. Service Temperature Range: Minus 40 to 180 degrees F.

5. Products:

a. Dow; DOWSIL SL Parking Structure Sealant: www.dow.com/#sle.

b. Pecora Corporation; Pecora 300 SL (Self-Leveling): www.pecora.com/#sle.

c. Pecora Corporation; Pecora 322 FC (Fast Cure): www.pecora.com/#sle.

d. Sika Corporation; Sikasil 728SL: www.usa.sika.com/#sle.

e. Tremco Commercial Sealants & Waterproofing; Spectrem 900SL: www.tremcosealants.com/#sle.

f. Or Equal Substitutions: See Section 01 60 00 - Product Requirements.

B. Type P-1 - Self-Leveling Polyurethane Sealant: ASTM C920, Grade P, Uses M and A; single or multicomponent; explicitly approved by manufacturer for traffic exposure; not expected to withstand continuous water immersion .
   1. Movement Capability: Plus and minus 25 percent, minimum.
   2. Hardness Range: 35 to 55, Shore A, when tested in accordance with ASTM C661.
   3. Color: To be selected by Architect from manufacturer's standard range.
   4. Service Temperature Range: Minus 40 to 180 degrees F.
   5. Products:
      a. Pecora Corporation: www.pecora.com/#sle.
      b. Sherwin-Williams Company; Stampede 1SL Polyurethane Sealant: www.sherwin-williams.com/#sle.
      c. Sika Corporation; Sikaflex-1c SL: www.usa.sika.com/#sle.

C. Type WFP-1 - Self-Leveling Polyurethane Sealant for Continuous Water Immersion: Polyurethane; ASTM C920, Grade P, Uses M and A; single component; explicitly approved by manufacturer for traffic exposure and continuous water immersion.
   1. Movement Capability: Plus and minus 25 percent, minimum.
   2. Hardness Range: 35 to 55, Shore A, when tested in accordance with ASTM C661.
   3. Color: To be selected by Architect from manufacturer's standard range.
   4. Service Temperature Range: Minus 40 to 180 degrees F.
   5. Products:
      a. Sika Corporation; Sikaflex-1c SL: www.usa.sika.com/#sle.
      b. W. R. MEADOWS, Inc; POURTHANE SL: www.wrmeadows.com/#sle.
      c. Or Equal Substitutions: See Section 01 60 00 - Product Requirements.

D. Self-Leveling Polysulfide Sealant: ASTM C920, Grade P, Uses M and A; multicomponent; explicitly approved by manufacturer for traffic exposure and continuous water immersion.
   1. Movement Capability: Plus and minus 25 percent.
   2. Hardness Range: 30 to 55, Shore A, when tested in accordance with ASTM C661.
   3. Color: To be selected by Architect from manufacturer's standard range.
   4. Service Temperature Range: Minus 40 to 180 degrees F.
   5. Products:
      a. W.R. Meadows, Inc; Deck-O-Seal (pourable): www.wrmeadows.com/#sle.
      b. W.R. Meadows, Inc; Deck-O-Seal 125: www.wrmeadows.com/#sle.
      c. Or Equal Substitutions: See Section 01 60 00 - Product Requirements.

E. Rigid Self-Leveling Polyurethane Joint Filler: Two part, low viscosity, fast setting; intended for cracks and control joints not subject to significant movement.
   1. Hardness Range: Greater than 100, Shore A, and 50 to 80, Shore D, when tested in accordance with ASTM C661.
   2. Products:
      a. ARDEX Engineered Cements; ARDEX ARDIFIX: www.ardexamericas.com/#sle.

b. Or Equal Substitutions: See Section 01 60 00 - Product Requirements.

F. Type EPX-1 - Semi-Rigid Self-Leveling Epoxy Joint Filler: Epoxy or epoxy/polyurethane copolymer; intended for filling cracks and control joints not subject to significant movement; rigid enough to support concrete edges under traffic.

1. Composition: Multicomponent, 100 percent solids by weight.
2. Durometer Hardness: Minimum of 85 for Type A or 35 for Type D, after seven days when tested in accordance with ASTM D2240.
3. Color: Concrete gray.
4. Joint Width, Minimum: 1/8 inch.
5. Joint Width, Maximum: 1/4 inch.
6. Joint Depth: Provide product suitable for joints from 1/8 inch to 2 inches in depth including space for backer rod.
7. Products:
   a. Dayton Superior Corporation: www.daytonsuperior.com/#sle.
   b. Euclid Chemical Company; EUCO 700: www.euclidchemical.com/#sle.
   c. Nox-Crete Inc; DynaFlex 502: www.nox-crete.com/#sle.
   d. W.R. Meadows, Inc; Rezi-Weld Flex: www.wrmeadows.com/#sle.
   e. Or Equal Substitutions: See Section 01 60 00 - Product Requirements.

G. Semi-Rigid Self-Leveling Polyurea Joint Filler: Two-component, 100 percent solids; intended for filling cracks and control joints not subject to significant movement; rigid enough to support concrete edges under traffic.

1. Durometer Hardness, Type A: 75, minimum, after seven days when tested in accordance with ASTM D2240.
2. Color: To be selected by Architect from manufacturer's standard colors.
3. Joint Width, Minimum: 1/8 inch.
4. Joint Width, Maximum: 1/2 inch.
5. Joint Depth: Provide product suitable for joints from 1/8 inch to 1 inch in depth excluding space for backer rod.
6. Products:
   a. Adhesives Technology Corporation: www.atcepoxy.com/#sle.
   b. ARDEX Engineered Cements; ARDEX ARDISEAL RAPID PLUS: www.ardexamericas.com/#sle.
   c. Euclid Chemical Company; EUCO QWIKjoint UVR: www.euclidchemical.com/#sle.
   d. Nox-Crete Inc; DynaFlex JF-85: www.nox-crete.com/#sle.
   e. Or Equal Substitutions: See Section 01 60 00 - Product Requirements.

2.06 ACCESSORIES

A. Backer Rod: Cylindrical cellular foam rod with surface that sealant will not adhere to, compatible with specific sealant used, and recommended by backing and sealant manufacturers for specific application.

1. Type for Joints Not Subject to Pedestrian or Vehicular Traffic: ASTM C1330; Type O - Open Cell Polyurethane.
2. Type for Joints Subject to Pedestrian or Vehicular Traffic: ASTM C1330; Type B - Bi-Cellular Polyethylene.
3. Open Cell: 40 to 50 percent larger in diameter than joint width.
4. Closed Cell and Bi-Cellular: 25 to 33 percent larger in diameter than joint width.
5. Products:
   a. Adfast USA Inc; Adseal BR-2600 Backer Rod: www.adfastcorp.com/#sle.

B. Backing Tape: Self-adhesive polyethylene tape with surface that sealant will not adhere to and recommended by tape and sealant manufacturers for specific application.

C. Masking Tape: Self-adhesive, nonabsorbent, nonstaining, removable without adhesive residue, and compatible with surfaces adjacent to joints and sealants.

D. Joint Cleaner: Noncorrosive and nonstaining type, type recommended by sealant manufacturer; compatible with joint forming materials.

E. Primers: Type recommended by sealant manufacturer to suit application; nonstaining.

PART 3 EXECUTION

3.01 EXAMINATION

A. Verify that joints are ready to receive work.

B. Verify that backing materials are compatible with sealants.

C. Verify that backer rods are of the correct size.

D. Preinstallation Adhesion Testing: Install a sample for each test location indicated in the test plan.
   1. Test each sample as specified in PART 1 under QUALITY ASSURANCE article.
   2. Notify Architect of date and time that tests will be performed, at least seven days in advance.
   3. Arrange for sealant manufacturer's technical representative to be present during tests.
   4. Record each test on Preinstallation Adhesion Test Log as indicated.
   5. If any sample fails, review products and installation procedures, consult manufacturer, or take other measures that are necessary to ensure adhesion; retest in a different location; if unable to obtain satisfactory adhesion, report to Architect.
   6. After completion of tests, remove remaining sample material and prepare joints for new sealant installation.

3.02 PREPARATION

A. Remove loose materials and foreign matter that could impair adhesion of sealant.

B. Clean joints, and prime as necessary, in accordance with manufacturer's instructions.

C. Perform preparation in accordance with manufacturer's instructions and ASTM C1193.

D. Mask elements and surfaces adjacent to joints from damage and disfigurement due to sealant work; be aware that sealant drips and smears may not be completely removable.

3.03 INSTALLATION

A. Install this work in accordance with sealant manufacturer's requirements for preparation of surfaces and material installation instructions.

B. Provide joint sealant installations complying with ASTM C1193.

C. Install acoustical sealant application work in accordance with ASTM C919.

D. Measure joint dimensions and size joint backers to achieve the following, unless otherwise indicated:

1. Width/depth ratio of 2:1.
2. Neck dimension no greater than 1/3 of the joint width.
3. Surface bond area on each side not less than 75 percent of joint width.

E. Install bond breaker backing tape where backer rod cannot be used.

F. Install sealant free of air pockets, foreign embedded matter, ridges, and sags, and without getting sealant on adjacent surfaces.

G. Do not install sealant when ambient temperature is outside manufacturer's recommended temperature range, or will be outside that range during the entire curing period, unless manufacturer's approval is obtained and instructions are followed.

H. Nonsag Sealants: Tool surface concave, unless otherwise indicated; remove masking tape immediately after tooling sealant surface.

I. Concrete Floor Joint Filler: After full cure, shave joint filler flush with top of concrete slab.

3.04 FIELD QUALITY CONTROL

A. See Section 01 40 00 - Quality Requirements for additional requirements.

B. District will employ an independent testing agency to perform field quality control inspection and testing as specified in PART 1 under QUALITY ASSURANCE article.

C. Non-Destructive Adhesion Testing: If there are any failures in first 100 linear feet, notify Architect immediately.

D. Destructive Adhesion Testing: If there are any failures in first 1,000 linear feet, notify Architect immediately.

E. Remove and replace failed portions of sealants using same materials and procedures as indicated for original installation.

F. Repair destructive test location damage immediately after evaluation and recording of results.

3.05 POST-OCCUPANCY

A. Post-Occupancy Inspection: Perform visual inspection of entire length of project sealant joints at a time that joints have opened to their greatest width, i.e., at low temperature in thermal cycle. Report failures immediately and repair them.

END OF SECTION

SECTION 09 65 00
RESILIENT FLOORING

PART 1 GENERAL

1.01 SECTION INCLUDES

A. Resilient base.

B. Installation accessories.

1.02 RELATED REQUIREMENTS

A. Section 01 61 16 - Volatile Organic Compound (VOC) Content Restrictions.

B. Section 03 30 00 - Cast-in-Place Concrete: Restrictions on curing compounds for concrete slabs and floors to receive adhesive-applied resilient flooring.

C. Section 09 05 61 - Common Work Results for Flooring Preparation: Concrete slab moisture and alkalinity testing and remediation procedures.

1. Remedial Floor coating is required under all resilient flooring.

1.03 REFERENCE STANDARDS

A. ASTM E648 - Standard Test Method for Critical Radiant Flux of Floor-Covering Systems Using a Radiant Heat Energy Source.

B. ASTM E662 - Standard Test Method for Specific Optical Density of Smoke Generated by Solid Materials.

C. ASTM F150 - Standard Test Method for Electrical Resistance of Conductive and Static Dissipative Resilient Flooring.

D. NFPA 253 - Standard Method of Test for Critical Radiant Flux of Floor Covering Systems Using a Radiant Heat Energy Source.

E. RFCI (RWP) - Recommended Work Practices for Removal of Resilient Floor Coverings.

1.04 SUBMITTALS

A. See Section 01 30 00 - Administrative Requirements for submittal procedures.

B. Product Data: Provide data on specified products, describing physical and performance characteristics; including sizes, patterns and colors available; and installation instructions.

C. Verification Samples: Submit two samples, 2 by 2 inch in size illustrating color and pattern for each resilient flooring product specified.

D. Manufacturer's Qualification Statement.

E. Installer's Qualification Statement.

F. Maintenance Data: Include maintenance procedures, recommended maintenance materials, and suggested schedule for cleaning, stripping, and re-waxing.

1.05 QUALITY ASSURANCE

A. Manufacturer Qualifications: Company specializing in manufacturing specified flooring with minimum ten years documented experience.

B. Installer Qualifications: Company specializing in installing specified flooring with minimum three years documented experience.

1.06 WARRANTY

A. Provide 10-year Commercial Limited Warranty.

1.07 DELIVERY, STORAGE, AND HANDLING

A. Upon receipt, immediately remove any shrink-wrap and check materials for damage and the correct style, color, quantity and run numbers.

B. Store all materials off of the floor in an acclimatized, weather-tight space.

C. Maintain temperature in storage area between 55 degrees F and 90 degrees F.

1.08 FIELD CONDITIONS

A. Store materials for not less than 48 hours prior to installation in area of installation at a temperature of 70 degrees F to achieve temperature stability. Thereafter, maintain conditions above 55 degrees F.

PART 2 PRODUCTS

2.01 REGULATORY REQUIREMENTS

A. All products used shall meet VOC requirements listed in Section 01 61 16 - Volatile Organic Compound (VOC) Content Restrictions.

B. All products used for flooring installation shall comply with flammability and smoke classifications for various locations of installation. Comply with applicable requirements of California Building Code (CBC) Chapter 8.

1. Smoke Density: ASTM E662 Rating to be less than 450 Dm (Optical Density) in flaming mode. (CBC 804.4.1).
2. Resilient Flooring shall be stable, firm, and slip resistant.

2.02 RESILIENT BASE

A. Resilient Base - Type RB-1: ASTM F1861, Type TS rubber, vulcanized thermoset; Style B, Cove.

1. Critical Radiant Flux (CRF): Minimum 0.45 watt per square centimeter, when tested in accordance with ASTM E 648, NFPA 253, ASTM E 648, or NFPA 253.
2. Height: 4 inches.
3. Thickness: 0.125 inch.
4. Finish: Satin.
5. Length: 4 foot sections.
6. Color: As indicated on drawings.
7. Accessories: Premolded external corners and internal corners.

2.03 ACCESSORIES

A. Primers and Adhesives: Waterproof; types recommended by flooring manufacturer.

1. VOC Content Limits: As specified in Section 01 61 16.

B. Filler for Coved Base: Plastic.

PART 3 EXECUTION

3.01 EXAMINATION

A. Environmental Condition: Comply with flooring manufacturer's instructions and recommendations.

1. Verify that ambient and surface temperatures and humidity conditions are in compliance.

B. Material Inspection:

1. In accordance with manufacturer's installation requirements, visually inspect materials prior to installation.
2. Material with visual defects shall not be installed.
3. Labor costs required to replace material installed with visual defects shall be the responsibility of the installation contractor.

3.02 PREPARATION

A. Clean substrate.

3.03 INSTALLATION - GENERAL

A. Starting installation constitutes acceptance of sub-floor conditions. Beginning of installation means acceptance of existing substrate and site conditions and assumes responsibility for correcting unsuitable conditions at no additional cost to the District.

B. Install in accordance with manufacturer's written instructions.

1. Compliance: Comply with manufacturer's product data, including product technical bulletins, product catalog installation instructions, and product carton instructions for installation.

C. Adhesive-Applied Installation:

1. Spread only enough adhesive to permit installation of materials before initial set.

3.04 INSTALLATION - RESILIENT BASE

A. Fit joints tightly and make vertical. Maintain minimum dimension of 18 inches between joints.

B. Miter internal corners. At external corners, use premolded units. At exposed ends, use premolded units.

C. Install base on solid backing. Bond tightly to wall and floor surfaces.

D. Scribe and fit to door frames and other interruptions.

3.05 FIELD QUALITY REQUIREMENTS

A. Manufacturer's Field Services: Upon District's request and with at least 72 hours notice, provide manufacturer's field service consisting of product use recommendations and periodic site visit for inspection of product installation in accordance with manufacturer's instructions.

3.06 CLEANING

A. Remove excess adhesive from floor, base, and wall surfaces without damage.

B. Clean in accordance with manufacturer's written instructions.

END OF SECTION

SECTION 09 68 16
CARPETING

PART 1 GENERAL

1.01 SECTION INCLUDES

A. Carpet, stretched-in with cushion underlay and direct-glued.

B. Removal of existing carpet.

1.02 RELATED REQUIREMENTS

A. Section 01 61 16 - Volatile Organic Compound (VOC) Content Restrictions.

B. Section 01 74 19 - Construction Waste Management and Disposal: Reclamation/Recycling of new carpet scrap, new cushion scrap, removed carpet, and removed carpet cushion.

C. Section 03 30 00 - Cast-in-Place Concrete: Restrictions on curing compounds for concrete slabs and floors to receive adhesive-applied carpet.

1.03 REFERENCE STANDARDS

A. ASTM D2859 - Standard Test Method for Ignition Characteristics of Finished Textile Floor Covering Materials.

B. ASTM E648 - Standard Test Method for Critical Radiant Flux of Floor-Covering Systems Using a Radiant Heat Energy Source.

C. ASTM E662 - Standard Test Method for Specific Optical Density of Smoke Generated by Solid Materials.

D. CRI (GL) - Green Label Testing Program - Certified Products.

E. CRI (GLP) - Green Label Plus Testing Program - Certified Products.

F. CRI 104 - Standard for Installation of Commercial Carpet.

G. NFPA 253 - Standard Method of Test for Critical Radiant Flux of Floor Covering Systems Using a Radiant Heat Energy Source.

1.04 SUBMITTALS

A. See Section 01 30 00 - Administrative Requirements for submittal procedures.

B. Product Data: Provide data on specified products, describing physical and performance characteristics; sizes, patterns, colors available, and method of installation.

C. Shop Drawings: Indicate seaming plan, method of joining seams, direction of carpet pile and pattern, location of edge moldings and edge bindings.

D. Samples: Submit two samples 12 by 12 inch in size illustrating color and pattern for each carpet material specified.

E. Submit two, 6 inch long samples of resilient base, edge strip, and base gripper for each color specified.

F. Manufacturer's Installation Instructions: Indicate special procedures.

G. Concrete Subfloor Test Report: Submit a copy of the moisture and alkalinity (pH) test reports.

H. Installer's Qualification Statement.

I. Maintenance Data: Include maintenance procedures, recommended maintenance materials, and suggested schedule for cleaning.

1.05 QUALITY ASSURANCE

A. Manufacturer Qualifications: Company specializing in manufacturing specified carpet with minimum ten years documented experience.

B. Installer Qualifications: Company specializing in installing carpet with minimum three years documented experience.

1.06 FIELD CONDITIONS

A. Store materials in area of installation for minimum period of 24 hours prior to installation.

1. Store inside, in well ventilated area, protected from weather, moisture and soiling. Store rolls flat, not standing on end.

B. Maintain minimum 70 degrees F ambient temperature 24 hours prior to, during and 24 hours after installation.

C. Deliver carpet materials in original mill protective wrapping with mill register numbers and tags attached.

D. Ventilate installation area during installation and for 72 hours after installation.

1.07 WARRANTY

A. Carpet Warranty: Provide 10-year Commercial Limited Warranty.

B. Extended Warranty: Provide extended warranty for a period of 25 years after “Notice of Completion”. Covering the following:

1. Edge raveling and zippering.
2. Wear exceeding 10 percent of face yarn weight.
3. Delamination.
4. Backing deterioration

PART 2 PRODUCTS

2.01 REGULATORY REQUIREMENTS

A. All products used for flooring installation shall comply with flammability and smoke classifications for various locations of installation. Comply with applicable requirements of California Building Code (CBC) Chapter 8.

B. All products used for flooring installation shall comply with flammability and smoke classifications for various locations of installation. Comply with applicable requirements of California Building Code (CBC) Chapter 8.

1. Smoke Density: ASTM E662 Rating to be less than 450 Dm (Optical Density) in flaming mode. (CBC 804.4.1).

C. Provide glue-down installation conforming to CBC Section 11B-302.2.

1. Carpet shall be securly attached and shall have a firm cushion. pad, or backing or no cushion or pad.
    a. Carpet shall have level loop, textured loop, level cut or level cut/uncut pile texture.
    b. Pile height shall be 1/2 inch maximum.
2. Exposed edges shall be fastened to floor surfaces and shall have trim on the entire length.
    a. Carpet edges shall comply with CBC Section 11B-303.

D. Comply with CalGreen Building Standards: All installed carpeting shall be low VOC emissions listed.Certified as Low Emission by one of the following:
1. Carpet and Rug Institute's Green Label Plus Program. CalGreen 5.504.4.4.1
2. Compliant with the VOC emission limits and testing requirements specified in the California Department of Public Health's "Standard Method for the Testing and Evaluation Chambers", Version 1.1, February 2010 or Specification 01350. CalGreen 5.504.4.4.2.
3. NSF/ANSI 140 at Gold level or higher. CalGreen 5.504.4.4.3
4. SCS Floorscore; www.scscertified.com. CalGreen 5.504.4.4.4.
5. Compliant with the Collaborative for High Performance Schools California (CA-CHPS) Criteria Interpretation for EQ 7.0 and EQ 7.1 (formerly EQ 2.2) dated July 2012 and listed in the CHPS High Performance Product Database; www.chps.net/manual/lem_table.htm. CalGreen 5.504.4.4.5.

2.02 MANUFACTURERS

A. Carpet:
1. Basis of Design Product: Indicated on Drawings as manufactured by Tarkett, or approved equal.

2.03 CARPET

A. Carpet:
1. Product: As indicated on Drawings manufactured by District Standard.
2. Roll Width: 6 ft.
3. Color: As indicated on Drawings.
4. Critical Radiant Flux: Minimum of 0.22 watts/sq cm, when tested in accordance with ASTM E648 or NFPA 253.
5. Surface Flammability Ignition: Pass ASTM D2859 (the "pill test").
6. VOC Content: Comply with Section 01 61 16.
7. VOC Content: Provide CRI (GLP) certified product; in lieu of labeling, independent test report showing compliance is acceptable.
8. Substitutions: Not permitted.

2.04 CUSHION

A. Cushion: Double bond rubber carpet pad.

1. VOC Content: Comply with Section 01 61 16 and CalGreen 5.504.4.4.1.
2. VOC Content: Provide CRI (GL) certified product; in lieu of labeling, independent test report showing compliance is acceptable.
3. Nominal Thickness: 0.100 inch.
4. Roll Width: 72 inches.

2.05 ACCESSORIES

A. Sub-Floor Filler: White premix latex; Type recommended by carpet manufacturer.

B. Moldings and Edge Strips: Vinyl, color as selected.

C. Adhesives:

1. Compatible with materials being adhered; maximum VOC content as specified in Section 01 61 16.

D. Seam Adhesive: Recommended by carpet manufacturer.

E. Carpet Adhesive: Recommended by carpet manufacturer; releasable type.

1. Peel and stick or a low VOC adhesive application is required

PART 3 EXECUTION

3.01 EXAMINATION

A. Verify that subfloor surfaces are smooth and flat within the tolerances specified for that type of work and are ready to receive carpet.

1. Maximum variation of 1/4-inch in 10 ft

B. Verify that subfloor surfaces are dust-free and free of substances that could impair bonding of adhesives to subfloor surfaces.

C. Carpet Verification: Verify carpet match before cutting to ensure minimal variation between dye lots.

D. Verify that required floor-mounted utilities are in correct location.

3.02 PREPARATION

A. Remove existing carpet and carpet cushion.

B. Prepare floor substrates as recommended by flooring and adhesive manufacturers.

C. Remove subfloor ridges and bumps. Fill minor or local low spots, cracks, joints, holes, and other defects with subfloor filler.

1. Fill all cracks wider than 1/8-inch.

D. Apply, trowel, and float filler to achieve smooth, flat, hard surface. Prohibit traffic until filler is cured.

E. Clean substrate.

1. Clean all dirt, paint, grease and curing compounds. Vacuum subfloor surface.

3.03 INSTALLATION - GENERAL

A. Starting installation constitutes acceptance of subfloor conditions.

B. Install carpet and cushion in accordance with manufacturer's instructionsand CRI 104 (Commercial).

C. Verify carpet match before cutting to ensure minimal variation between dye lots.

D. Lay out carpet and locate seams in accordance with shop drawings.

1. Locate seams in area of least traffic, out of areas of pivoting traffic, and parallel to main traffic.

a. Fit seams straight, not crowded or peaked, free of gaps. Avoid seams in front of doors or other high traffic areas. Join seams by hot adhesive tape method. Form seams straight, not overlapped or peaked, and free of gaps.

2. Do not locate seams perpendicular through door openings.

3. Align run of pile in same direction as anticipated traffic and in same direction on adjacent pieces.

4. Locate change of color or pattern between rooms under door centerline.

5. Provide monolithic color, pattern, and texture match within any one area.

E. Install carpet tight and flat on subfloor, well fastened at edges, with a uniform appearance.

1. Join seams by hot adhesive tape method. Form seams straight, not overlapped or peaked, and free of gaps.

3.04 DIRECT-GLUED CARPET

A. Double cut carpet seams, with accurate pattern match. Make cuts straight, true, and unfrayed. Apply seam adhesive to cut edges of woven carpet immediately.

B. Apply contact adhesive to floor uniformly at rate recommended by manufacturer. After sufficient open time, press carpet into adhesive.

C. Apply seam adhesive to the base of the edge glued down. Lay adjoining piece with seam straight, not overlapped or peaked, and free of gaps.

1. Butt and glue edges tightly and roll seams to ensure complete bond.

D. Roll with appropriate roller for complete contact of adhesive to carpet backing.

E. Trim carpet neatly at walls and around interruptions.

1. Edges: Run carpet under open bottom items and all cabinets and install tight to walls. Neatly trim and secure edge of carpet adjacent to door jambs where no base occurs.

F. Complete installation of edge strips, concealing exposed edges. Bind cut edges where not concealed by edge strips.

G. Carpet Finishing: Brush all seams and trim protruding pile tufts level. Remove excess adhesive on the carpet surface and thoroughly vacuum entire area. Leave room clean and ready for use.

3.05 PROTECTION

A. Cover carpet during construction period with reinforced kraft paper when construction traffic is required to cross carpeted areas.

B. Remove and replace damaged or improperly installed carpet.

3.06 CLEANING

A. Remove excess adhesive from floor and wall surfaces without damage.

B. Clean and vacuum carpet surfaces.

1. Vacuum and remove all stains from carpet to satisfaction of District and in accordance with cleaning specified in Section 01 70 00 - Execution and Closeout Requirements.

END OF SECTION

SECTION 09 91 13
EXTERIOR PAINTING

PART 1 GENERAL

1.01 SECTION INCLUDES

A. Surface preparation.

B. Field application of paints.

C. Scope: Finish exterior surfaces exposed to view, unless fully factory-finished and unless otherwise indicated, including the following:

1. Mechanical and Electrical:

a. On the roof and outdoors, paint equipment exposed to weather or to view, including factory-finished materials.

D. Do Not Paint or Finish the Following Items:

1. Items factory-finished unless otherwise indicated; materials and products having factory-applied primers are not considered factory finished.
2. Items indicated to receive other finishes.
3. Items indicated to remain unfinished.
4. Fire rating labels, equipment serial number and capacity labels, and operating parts of equipment.
5. Non-metallic roofing and flashing.
6. Stainless steel, anodized aluminum, bronze, terne-coated stainless steel, zinc, and lead.
7. Glass.
8. Concealed pipes, ducts, and conduits.

1.02 RELATED REQUIREMENTS

A. Section 01 61 16 - Volatile Organic Compound (VOC) Content Restrictions.

1.03 DEFINITIONS

A. Comply with ASTM D16 for interpretation of terms used in this section.

1.04 REFERENCE STANDARDS

A. 40 CFR 59, Subpart D - National Volatile Organic Compound Emission Standards for Architectural Coatings; U.S. Environmental Protection Agency.

B. ASTM D16 - Standard Terminology for Paint, Related Coatings, Materials, and Applications.

C. ASTM D4442 - Standard Test Methods for Direct Moisture Content Measurement of Wood and Wood-Based Materials.

D. CARB (SCM) - Suggested Control Measure for Architectural Coatings; California Air Resources Board.

E. SCAQMD 1113 - Architectural Coatings.

F. SSPC-SP 1 - Solvent Cleaning.

G. SSPC-SP 2 - Hand Tool Cleaning.

H. SSPC-SP 6 - Commercial Blast Cleaning.

1.05 SUBMITTALS

A. See Section 01 30 00 - Administrative Requirements, for submittal procedures.

B. Product Data: Provide complete list of products to be used, with the following information for each:

1. Manufacturer's name, product name and/or catalog number, and general product category (e.g. "alkyd enamel").
2. MPI product number (e.g. MPI #47).
3. Cross-reference to specified paint system(s) product is to be used in; include description of each system.
4. Manufacturer's installation instructions.
5. If proposal of substitutions is allowed under submittal procedures, explanation of substitutions proposed.

C. Samples: Submit three paper "draw down" samples, 8-1/2 by 11 inches in size, illustrating range of colors available for each finishing product specified.

1. Where sheen is specified, submit samples in only that sheen.
2. Where sheen is not specified, discuss sheen options with Architect before preparing samples, to eliminate sheens not required.

D. Certification: By manufacturer that paints and finishes comply with VOC limits specified.

E. Manufacturer's Instructions: Indicate special surface preparation procedures.

F. Maintenance Data: Submit data including finish schedule showing where each product/color/finish was used, product technical data sheets, material safety data sheets (MSDS), care and cleaning instructions, touch-up procedures, repair of painted and finished surfaces, and color samples of each color and finish used.

G. Maintenance Materials: Furnish the following for District's use in maintenance of project.

1. See Section 01 60 00 - Product Requirements, for additional provisions.
2. Extra Paint and Finish Materials: 1 gallon of each color; from the same product run, store where directed.
3. Label each container with color in addition to the manufacturer's label.

1.06 QUALITY ASSURANCE

A. Manufacturer Qualifications: Company specializing in manufacturing the products specified, with minimum three years documented experience.

B. Applicator Qualifications: Company specializing in performing the type of work specified with minimum three years documented experience.

1.07 DELIVERY, STORAGE, AND HANDLING

A. Deliver products to site in sealed and labeled containers; inspect to verify acceptability.

B. Container Label: Include manufacturer's name, type of paint, brand name, lot number, brand code, coverage, surface preparation, drying time, cleanup requirements, color designation, and instructions for mixing and reducing.

C. Paint Materials: Store at minimum ambient temperature of 45 degrees F and a maximum of 90 degrees F, in ventilated area, and as required by manufacturer's instructions.

1.08 FIELD CONDITIONS

A. Do not apply materials when surface and ambient temperatures are outside the paint product manufacturer's temperature ranges.

B. Follow manufacturer's recommended procedures for producing best results, including testing of substrates, moisture in substrates, and humidity and temperature limitations.

C. Do not apply exterior paint and finishes during rain or snow, or when relative humidity is outside the humidity ranges required by the paint product manufacturer.

D. Minimum Application Temperatures for Latex Paints: 50 degrees F for exterior; unless required otherwise by manufacturer's instructions.

E. Provide lighting level of 80 ft candles measured mid-height at substrate surface.

PART 2 PRODUCTS

2.01 MANUFACTURERS

A. Provide paints and finishes from the same manufacturer to the greatest extent possible.

1. If a single manufacturer cannot provide specified products, minor exceptions will be permitted provided approval by Architect is obtained using the specified procedures for substitutions.

2. Substitution of other products by the same manufacturer is preferred over substitution of products by a different manufacturer.

B. Paints:

1. Behr Process Corporation: www.behr.com/#sle.

   a. Local representative Joe Esquer, 657.212.0111.

2. Dunn-Edwards Corporation: www.dunnedwards.com,

   a. Local representative Wanda Barragan 909.261.1289.

3. PPG Paints: www.ppgpaints.com/#sle.

   a. Local representative Susan L. Giampietro 949.410.2452.

4. Sherwin-Williams Company: www.sherwin-williams.com/#sle.

   a. Local representative John Dumesnil 619.665.9341.

5. Vista Paint Corporation: www.vistapaint.com/#sle.

   a. Local representative Mark Brower 323.397.9000.

C. Primer Sealers: Same manufacturer as top coats.

D. Substitutions: See Section 01 60 00 - Product Requirements.

2.02 PAINTS AND FINISHES - GENERAL

A. Paints and Finishes: Ready-mixed, unless required to be a field-catalyzed paint.

1. Provide paints and finishes of a soft paste consistency, capable of being readily and uniformly dispersed to a homogeneous coating, with good flow and brushing properties, and capable of drying or curing free of streaks or sags.
2. Provide materials that are compatible with one another and the substrates indicated under conditions of service and application, as demonstrated by manufacturer based on testing and field experience.
3. For opaque finishes, tint each coat including primer coat and intermediate coats, one-half shade lighter than succeeding coat, with final finish coat as base color.
4. Supply each paint material in quantity required to complete entire project's work from a single production run.
5. Do not reduce, thin, or dilute paint or finishes or add materials unless such procedure is described explicitly in manufacturer's product instructions.

B. No intentionally added cadmium.

C. Volatile Organic Compound (VOC) Content:

1. Provide paints and finishes that comply with the most stringent requirements specified in the following:
   a. 40 CFR 59, Subpart D--National Volatile Organic Compound Emission Standards for Architectural Coatings.
   b. SCAQMD 1113 Rule.
   c. CARB (SCM).
   d. Architectural coatings VOC limits of California.
2. Determination of VOC Content: Testing and calculation in accordance with 40 CFR 59, Subpart D (EPA Method 24), exclusive of colorants added to a tint base and water added at project site; or other method acceptable to authorities having jurisdiction.

D. Flammability: Comply with applicable code for surface burning characteristics.

E. Sheens: Provide the sheens specified; where sheen is not specified, sheen will be selected later by Architect from the manufacturer's full line.

F. Colors: As indicated in Color Schedule.

1. Extend colors to surface edges; colors may change at any edge as directed by Architect.

2.03 PAINT SYSTEMS - EXTERIOR

A. Exterior Surfaces to be Painted, Unless Otherwise Indicated: Including primed wood and primed metal.

1. One or two coats to cover and one coat primer.
2. Top Coat(s): Exterior Latex.
3. Top Coat Sheen:
   a. Flat: MPI gloss level 1; use this sheen at all locations.
   b. Semi-Gloss: MPI gloss level 5; use this sheen at trim.

4. Primer: As recommended by top coat manufacturer for specific substrate.

B. Wood, Opaque, Acrylic Latex, 3 Coat:
   1. One coat of latex primer sealer.
   2. Flat: Two coats of acrylic latex.

C. Ferrous Metals, Unprimed, Latex, 3 Coat:
   1. One coat of latex primer.

D. Ferrous Metals, Primed, Latex, 2 Coat:
   1. Touch-up with rust-inhibitive primer recommended by top coat manufacturer.

E. Ferrous Metals, Unprimed, High-Performance, 3 Coat:
   1. Pre-Treatment: As recommended by manufacturer
   2. One coat galvanize primer.
   3. Gloss: Two coats of alkyd enamel.

2.04 PRIMERS

A. Primers: Provide the following unless other primer is required or recommended by manufacturer of top coats.
   1. Alkali Resistant Water Based Primer.
   2. Anti-Corrosive Alkyd Primer for Metal.
   3. Interior/Exterior Quick Dry Alkyd Primer for Metal.
   4. Alkyd Primer for Galvanized Metal.
   5. Water Based Primer for Galvanized Metal.
   6. Rust-Inhibitive Water Based Primer.
   7. Interior/Exterior Quick Dry Primer for Aluminum.
   8. Stain Blocking Primer.

2.05 ACCESSORY MATERIALS

A. Accessory Materials: Provide primers, sealers, cleaning agents, cleaning cloths, sanding materials, and clean-up materials as required for final completion of painted surfaces.

B. Patching Material: Latex filler.

C. Fastener Head Cover Material: Latex filler.

PART 3 EXECUTION

3.01 EXAMINATION

A. Do not begin application of paints and finishes until substrates have been properly prepared.

B. Verify that surfaces are ready to receive work as instructed by the product manufacturer.

C. Examine surfaces scheduled to be finished prior to commencement of work. Report any condition that may potentially effect proper application.

D. Test shop-applied primer for compatibility with subsequent cover materials.

E. Measure moisture content of surfaces using an electronic moisture meter. Do not apply finishes unless moisture content of surfaces are below the following maximums:
   1. Exterior Wood: 15 percent, measured in accordance with ASTM D4442.

3.02 PREPARATION

A. Clean surfaces thoroughly and correct defects prior to application.

B. Prepare surfaces using the methods recommended by the manufacturer for achieving the best result for the substrate under the project conditions.

C. Remove or repair existing paints or finishes that exhibit surface defects.

D. Remove or mask surface appurtenances, including electrical plates, hardware, light fixture trim, escutcheons, and fittings, prior to preparing surfaces for finishing.

E. Seal surfaces that might cause bleed through or staining of topcoat.

F. Remove mildew from impervious surfaces by scrubbing with solution of tetra-sodium phosphate and bleach. Rinse with clean water and allow surface to dry.

G. Galvanized Surfaces:
   1. Remove surface contamination and oils and wash with solvent according to SSPC-SP 1.
   2. Prepare surface according to SSPC-SP 2.

H. Ferrous Metal:
   1. Solvent clean according to SSPC-SP 1.
   2. Shop-Primed Surfaces: Sand and scrape to remove loose primer and rust. Feather edges to make touch-up patches inconspicuous. Clean surfaces with solvent. Prime bare steel surfaces. Re-prime entire shop-primed item.
   3. Remove rust, loose mill scale, and other foreign substances using methods recommended in writing by paint manufacturer and blast cleaning according to SSPC-SP 6 Commercial Blast Cleaning. Protect from corrosion until coated.

I. Exterior Wood Surfaces to Receive Opaque Finish: Remove dust, grit, and foreign matter. Seal knots, pitch streaks, and sappy sections. Fill nail holes with tinted exterior calking compound after prime coat has been applied. Back prime concealed surfaces before installation.

J. Metal Doors to be Painted: Prime metal door top and bottom edge surfaces.

3.03 APPLICATION

A. Remove unfinished louvers, grilles, covers, and access panels on mechanical and electrical components and paint separately.

B. Exterior Wood to Receive Opaque Finish: If final painting must be delayed more than 2 weeks after installation of woodwork, apply primer within 2 weeks and final coating within 4 weeks.

C. Apply products in accordance with manufacturer's written instructions.

D. Where adjacent sealant is to be painted, do not apply finish coats until sealant is applied.

E. Do not apply finishes to surfaces that are not dry. Allow applied coats to dry before next coat is applied.

F. Apply each coat to uniform appearance.

G. Dark Colors and Deep Clear Colors: Regardless of number of coats specified, apply additional coats until complete hide is achieved.

H. Sand metal surfaces lightly between coats to achieve required finish.

I. Vacuum clean surfaces of loose particles. Use tack cloth to remove dust and particles just prior to applying next coat.

J. Reinstall electrical cover plates, hardware, light fixture trim, escutcheons, and fittings removed prior to finishing.

3.04 FIELD QUALITY CONTROL

A. See Section 01 40 00 - Quality Requirements, for general requirements for field inspection.

3.05 CLEANING

A. Collect waste material that could constitute a fire hazard, place in closed metal containers, and remove daily from site.

3.06 PROTECTION

A. Protect finishes until completion of project.

B. Touch-up damaged finishes after Substantial Completion.

END OF SECTION

SECTION 10 11 00
VISUAL DISPLAY UNITS

PART 1 GENERAL

1.01 SECTION INCLUDES

A. Porcelain enamel steel markerboards.

B. Tackable wall panels.

1.02 REFERENCE STANDARDS

A. ADA Standards - 2010 ADA Standards for Accessible Design.

B. ANSI A208.1 - American National Standard for Particleboard.

C. ASTM A424/A424M - Standard Specification for Steel, Sheet, for Porcelain Enameling.

D. ASTM C208 - Standard Specification for Cellulosic Fiber Insulating Board.

E. ASTM E84 - Standard Test Method for Surface Burning Characteristics of Building Materials.

F. ASTM F793/F793M - Standard Classification of Wall Coverings and Ceiling Coverings by Use Characteristics.

G. CBC - California Building Code.

1.03 SUBMITTALS

A. See Section 01 30 00 - Administrative Requirements, for submittal procedures.

B. Product Data: Provide manufacturer's data on porcelain enamel steel markerboard, tackboard, tackboard surface covering, trim, and accessories.

C. Shop Drawings: Indicate wall elevations, dimensions, joint locations , special anchor details.

D. Samples: Color charts for selection of color and texture of porcelain enamel steel markerboard, tackboard, tackboard surface covering, and trim.

E. Test Reports: Show compliance to specified surface burning characteristics requirements.

F. Manufacturer's printed installation instructions.

G. Manufacturer's Qualification Statement.

H. Maintenance Data: Include data on regular cleaning, stain removal .

1.04 QUALITY ASSURANCE

A. Manufacturer Qualifications: Company specializing in manufacturing the products specified in this section with minimum three years documented experience.

1.05 WARRANTY

A. See Section 01 78 00 - Closeout Submittals, for additional warranty requirements.

B. Provide five year warranty for markerboard to include warranty against discoloration due to cleaning, crazing or cracking, and staining.

PART 2 PRODUCTS

2.01 REGULATORY REQUIREMENTS:

A. Requirements for Persons with Disabilities: Provide products meeting requirements of California Code of Regulations (CCR), Title 24, Part 2, CBC, CBC Ch. 11B, and ADA Standards, latest amendment.

1. Operable parts for all accessible items shall comply with CBC Ch. 11B-309 Operable Parts.
2. Pull hardware shall be U-shaped wire pulls or equally accessible at all accessible casework; CBC Ch. 11B-811.4 Operable Parts.

2.02 VISUAL DISPLAY UNITS

A. Porcelain Enamel Steel Markerboards:

1. Manufacturers:
   a. A-1 Visual Systems Co.: www.a-1visualsystems.com.
   b. ADP Lemco, Inc: www.adplemco.com/#sle.
   c. ASI Visual Display Products: www.asi-visualdisplayproducts.com/#sle.
   d. Chatfield-Clarke: www.chafield-clarke.com.
   e. Claridge Products and Equipment, Inc: www.claridgeproducts.com/#sle.
   f. Egan Visual Corporation; Egan Visual WhiteBoards: www.egan.com/#sle.
   g. Nelson Adams NACO: www.nelsonadamsnaco.com/#sle.
   h. Platinum Visual Systems: pvusa.com.
   i. Polyvision Corporation: www.polyvision.com/#sle.
   j. Or Equal Substitutions: See Section 01 60 00 - Product Requirements.
2. Color: White.
3. Steel Face Sheet Thickness: 24 gauge, 0.0239 inch .
4. Core: Particleboard, manufacturer's standard thickness, laminated to face sheet.
5. Backing: Aluminum foil, laminated to core.
6. Size: As indicated on drawings.
7. Frame: Extruded aluminum , with concealed fasteners.
8. Frame Profile: As indicated on drawings.
9. Frame Finish: Anodized, natural.
10. Accessories: Provide marker tray, map rail, and flag holder.

B. Tackable Wall Panels: Fabric laminated to fiberboard; Factory-fabricated. TWP-

1. Manufacturers:
   a. A-1 Visual Systems Co.: www.a-1visualsystems.com.
   b. ABC School Equipment: www.abcse.com.
   c. ADP Lemco, Inc: www.adplemco.com/#sle.
   d. Chatfield-Clarke; Vinyl Tackboard Panels: www.chafield-clarke.com.

e. Claridge Products and Equipment, Inc; 3400 Series: www.claridgeproducts.com/#sle.

f. Lamvin Inc.; Tackboard Panels: www.lamvin.com.

g. Nelson Adams NACO: www.nelsonadamsnaco.com/#sle.

h. Or Equal Substitutions: See Section 01 60 00 - Product Requirements.

2. Fabric: Vinyl-coated fabric.

a. Manufacturers:

1) Carnegie: carnegiefabrics.com.

2) Maharam: www.maharam.com.

3) As indicated on interior finish materials schedule.

4) Or Equal Substitutions: See Section 01 60 00 - Product Requirements.

3. Color, Pattern, and Texture: As selected from manufacturer's full range.

4. Backing: Fiber board, 1/2 inch thick, laminated to tack surface.

5. Surface Burning Characteristics: Flame spread index of 25, maximum, and smoke developed index of 450, maximum, when tested in accordance with ASTM E84.

6. Panel Width: As indicated on drawings.

7. Height: Full height of room or wall; No horizontal seams.

8. Length: As indicated on drawings.

9. Edge Treatment: Square edge unless detailed otherwise.

10. Edge Molding: Provide metal "J-mold" type edge trim for exposed edges at door and window openings and similar conditions.

11. Adhesives: Provide manufacturer's recommended adhesive, primer, and sealer, produced for use on substrate shown on drawings. Provide materials which are mildew-resistant and non staining to wallcovering.

C. Combination Units and Units Made of More Than One Panel: Factory-assembled markerboards in a single frame, of materials specified above.

1. Join panels of similar construction with butt joints, aligned and secured with steel spline concealed in edge of core.

2. Configuration: As indicated on drawings.

3. Units Too Large to Ship Assembled: Fully assembled in factory, then disassembled for shipping.

2.03 MATERIALS

A. Porcelain Enameled Steel Sheet: ASTM A424/A424M, Type I, Commercial Steel, with fired-on vitreous finish.

B. Vinyl-Coated Fabric: ASTM F793 Category VI.

C. Particleboard: ANSI A208.1; wood chips, set with waterproof resin binder, sanded faces.

D. Fiber Board: ASTM C208, cellulosic fiber board.

E. Foil Backing: Aluminum foil sheet, 0.005 inch thick.

F. Adhesives: Type used by manufacturer.

2.04 ACCESSORIES

A. Map Rail: Extruded aluminum, manufacturer's standard profile, with cork insert and runners for accessories; 1 inch wide overall , full width of frame.

B. Map Supports: Formed aluminum sliding hooks and roller brackets to fit map rail.

C. Temporary Protective Cover: Sheet polyethylene, 8 mil thick.

D. Flag Holders: Cast aluminum bored to receive 1 inch diameter flag staff, bracketed to fit top rail of board.

E. Cleaning Instruction Plate: Provide instructions for chalkboard cleaning on a metal plate fastened to perimeter frame near chalkrail.

F. Marker Tray: Aluminum, manufacturer's standard profile, one piece full length of markerboard, molded ends, concealed fasteners, same finish as frame.

G. Mounting Brackets: Concealed.

PART 3 EXECUTION

3.01 EXAMINATION

A. Verify that field measurements are as indicated.

B. Verify that internal wall blocking is ready to receive work and positioning dimensions are as indicated on shop drawings.

3.02 PREPARATION

A. Acclimatize tackable wall panels by removing from packaging in installation area not less than 24 hours before application.

B. Remove switchplates, wall plates, and surface-mounted fixtures where tackable wall paneling is applied. Reinstall items on completion of installation.

C. Prepare surfaces using the methods recommended by the manufacturer for achieving the best result for the substrate under the project conditions.

3.03 INSTALLATION

A. Install boards in accordance with manufacturer's instructions.

B. Install with top of marker tray at 30 inches above finished floor.

C. Secure units level and plumb.

D. Butt Joints: Install with tight hairline joints.

E. Carefully cut holes in boards for thermostats, wall switches, and outlets.

F. Install tackable wall panels in accordance with manufacturer's recommendations on specified substrates with concealed attachments.

1. Fabricate re-wrapped edges where partial panels about each other, or adjacent surfaces or trim.

2. Re-wrap top, bottom or side edges for cutting panels around door or window openings, abutting trim, protruding objects, and at other openings, including x-cut at receptacles, light switches, and other openings.

a. Wrap minimum 2 inches around back of panel.

b. Carefully cut fiber board, leaving vinyl wallcovering intact. Wrap wallcovering tightly around edge of board and adhere continuously around back of panel with manufacturer's recommended vinyl wallcovering adhesive.

3.04 CLEANING

A. Clean board surfaces in accordance with manufacturer's instructions.

B. Cover with protective cover, taped to frame.

C. Remove temporary protective cover at Final Inspection.

END OF SECTION

SECTION 10 14 19
DIMENSIONAL LETTER SIGNAGE

PART 1 GENERAL

1.01 SECTION INCLUDES

A. Dimensional letter signage.

1.02 REFERENCE STANDARDS

A. 36 CFR 1191 - Americans with Disabilities Act (ADA) Accessibility Guidelines for Buildings and Facilities; Architectural Barriers Act (ABA) Accessibility Guidelines.

B. ADA Standards - 2010 ADA Standards for Accessible Design.

C. CBC Chapter 11B - California Building Code-Chapter 11B.

1.03 SUBMITTALS

A. See Section 01 30 00 - Administrative Requirements for submittal procedures.

B. Product Data: Manufacturer's product literature for each type of dimensional letter sign, indicating style, font, colors, locations, and overall dimensions of each sign.

C. Shop Drawings:

1. Include dimensions, locations, elevations, materials, text and graphic layout, and attachment details.

D. Samples: Submit one sample of each type of dimensional letter sign of size similar to that required for project, indicating sign style, font, and method of attachment.

E. Selection Samples: Where materials, colors, and finishes are not specified, submit two sets of selection charts or chips.

F. Verification Samples: Submit samples showing colors and finishes specified.

G. Manufacturer's Installation Instructions: Include installation templates and attachment devices.

H. Manufacturer's qualification statement.

1.04 QUALITY ASSURANCE

A. Manufacturer Qualifications: Company specializing in manufacturing the products specified in this section with minimum three years of documented experience.

1.05 DELIVERY, STORAGE, AND HANDLING

A. Package dimensional letter signs as required to prevent damage before installation.

B. Store under cover and elevated above grade.

PART 2 PRODUCTS

2.01 MANUFACTURERS

A. Dimensional Letter Signs:

1. 3A Composites USA; Dibond, Digital: www.display.3acomposites.com
2. A.R.K. Ramos: www.arkramos.com/#sle.
3. ASI Sign Systems, Inc.: www.asisignage.com.
4. Cosco Industries; Cast Aluminum: www.coscoarchitecturalsigns.com.
5. FASTSIGNS International, Inc: www.fastsigns.com/#sle.
6. Gemini, Inc.: geminimade.com.
7. Inpro Corporation: www.inprocorp.com/#sle.
8. Metallic Arts: www.metallicarts.com.
9. Substitutions: See Section 01 60 00 - Product Requirements.

2.02 REGULATORY REQUIREMENTS

A. Accessibility Requirements: Comply with ADA Standards and CBC Chapter 11B, unless otherwise indicated; in the event of conflicting requirements, comply with the most restrictive requirements.

2.03 DIMENSIONAL LETTERS

A. Applications: Building identification.
   1. Use individual metal letters.
   2. Mounting Location: Exterior as indicated on drawings.

B. Metal Letters:
   1. Material: Aluminum casting.
   2. Letter Height: As indicated on drawings.
   3. Text and Typeface:
      a. Character Font: As indicated on Drawings.
   4. Finish: As selected by Architect from manufacturer's full range.
   5. Color: As selected.
   6. Mounting: Projected mount with collars.

2.04 ACCESSORIES

A. Concealed Screws: Noncorroding metal; stainless steel or galvanized steel.

B. Exposed Screws: Stainless steel.

PART 3 EXECUTION

3.01 EXAMINATION

A. Verify that substrate surfaces are ready to receive work.

B. Notify Architect if conditions are not suitable for installation of signs; do not proceed until conditions are satisfactory.

3.02 INSTALLATION

A. Install in accordance with manufacturer's instructions.

B. Install with horizontal edges level.

C. Locate dimensional letter signs and mount at heights indicated on drawings and in accordance with ADA Standards, CBC Chapter 11B, and applicable building codes.

D. Protect from damage until final inspection; repair or replace damaged items.

END OF SECTION

SECTION 10 14 23
PANEL SIGNAGE

PART 1 GENERAL

1.01 SECTION INCLUDES

A. Panel signage.

1.02 REFERENCE STANDARDS

A. 36 CFR 1191 - Americans with Disabilities Act (ADA) Accessibility Guidelines for Buildings and Facilities; Architectural Barriers Act (ABA) Accessibility Guidelines.

B. ADA Standards - 2010 ADA Standards for Accessible Design.

C. CBC - California Building Code.

D. CBC Chapter 11B - California Building Code-Chapter 11B.

1.03 SUBMITTALS

A. See Section 01 30 00 - Administrative Requirements for submittal procedures.

B. Product Data: Manufacturer's product literature for each type of panel sign, indicating styles, font, foreground and background colors, locations, and overall dimensions of each sign.

C. Shop Drawings:

1. Include dimensions, locations, elevations, materials, text and graphic layout, attachment details, and schedules.
2. Schedule: Provide information sufficient to completely define each panel sign for fabrication, including room number, room name, other text to be applied, sign and letter sizes, fonts, and colors.
   a. When room numbers to appear on signs differ from those on drawings, include the drawing room number on schedule.
   b. When content of signs is indicated to be determined later, request such information from District through Architect at least 2 months prior to start of fabrication; upon request, submit preliminary schedule.
   c. Submit for approval by District through Architect prior to fabrication.

D. Samples: Submit two samples of each type of sign, of size similar to that required for project, indicating sign style, font, and method of attachment.

E. Verification Samples: Submit samples showing colors, materials, and finishes specified.

F. Manufacturer's Installation Instructions: Include installation templates and attachment devices.

G. Manufacturer's qualification statement.

H. Maintenance Materials: Furnish the following for District's use in maintenance of project.

1. See Section 01 60 00 - Product Requirements for additional provisions.

1.04 QUALITY ASSURANCE

A. Manufacturer Qualifications: Company specializing in manufacturing the products specified in this section with minimum three years of documented experience.

1.05 DELIVERY, STORAGE, AND HANDLING

A. Package signs as required to prevent damage before installation.

B. Package room and door signs in sequential order of installation, labeled by floor or building.

C. Store under cover and elevated above grade.

D. Store tape adhesive at normal room temperature.

1.06 FIELD CONDITIONS

A. Do not install tape adhesive when ambient temperature is lower than recommended by manufacturer.

B. Maintain minimum ambient temperature during and after installation.

PART 2 PRODUCTS

2.01 MANUFACTURERS

A. Panel Signage:

1. ASI Sign Systems, Inc.: www.asisignage.com.
2. Best Sign Systems, Inc: www.bestsigns.com/#sle.
3. FASTSIGNS International, Inc: www.fastsigns.com/#sle.
4. Inpro Corporation: www.inprocorp.com/#sle.
5. Mohawk Sign Systems, Inc: www.mohawksign.com/#sle.
6. Seton Identification Products: www.seton.com/aec/#sle.
7. Or Equal Substitutions: See Section 01 60 00 - Product Requirements.

2.02 REGULATORY REQUIREMENTS

A. Accessibility Requirements: Comply with ADA Standards, CBC Chapter 11B, and applicable building codes, unless otherwise indicated; in the event of conflicting requirements, comply with the most restrictive requirements.

1. Requirements for Accessibility : Provide identifying devices meeting the requirements for persons with the following codes:
   a. California Building Code (CBC) Title 24, Part 2; Chapter 11B, Accessibility.
   b. Code of Federal Regulations 36 CFR 1191 - Americans with Disabilities Act (ADA) Accessibility Guidelines for Buildings and Facilities.
   c. Accessible Means of Egress Signage: CBC 1009.
2. Raised characters: Comply with CBC Section 11B-703.2.
   a. Depth: Raised characters shall be raised 1/32 inch (0.8 mm) minimum above their background, shall be sans serif uppercase letters, and shall be duplicated in Braille.

b. Height: Raised character height shall be 5/8 inch (15.9 mm) minimum and 2 inches (51 mm) maximum based on the height of the uppercase letter “I”. CBC Section 11B-703.2.5

c. Proportions: Raised Character proportions shall be selected from fonts where the width of the uppercase letter “O” is 60% minimum and 110% maximum of the height of the uppercase letter “I”. Stroke thickness of the uppercase letter “I” shall be 15% maximum of the height of the character. CBC Sections 11B-703.2.4 and 11B-703.2.6

d. Character Spacing: Spacing between individual raised characters shall comply with CBC Section 11B-703.2.7

e. Line Spacing: Spacing between separate lines of raised characters shall comply with CBC Section 11B-703.2.8

f. Format: Raised character text shall be in a horizontal format. CBC Section 11B-703.2.9

g. Braille: Braille shall be contracted (Grade 2) and shall comply with CBC Sections 11B-703.3 and 11B-703.4. Braille dots shall have a domed or rounded shape and shall comply with CBC Table and Figure 11B-703.3.1.

h. Mounting Height: Tactile characters on signs shall be located 48” minimum to the baseline of the lowest Braille cells and 60” maximum to the baseline of the highest line of raised characters above the finish floor or ground surface. CBC Section and Figure 11B-703.4.1

i. Mounting Location: Tactile signs shall be located per CBC Section and Figure 11B - 703.4.2 as follows:

   1) alongside a single door at the latch side.

   2) on the inactive leaf at double doors with one active leaf.

   3) to the right of the right hand door at double doors with two active leafs.

   4) on the nearest adjacent wall where there is no wall space at the latch side of a single door or at the right side of double doors with two active leafs.

   5) so that a clear floor space of 18” x18” minimum, centered on the tactile characters, is provided beyond the arc of any door swing between the closed position and 45 degree open position.

j. Visual Characters shall comply with CBC Section 11B-703.5:

   1) Mounting Height: Visual characters on signs shall be 40” minimum above finish floor or ground.

   2) Finish and Contrast: Characters and their background shall have a non-glare finish. Character shall contrast with their background with either light characters on a dark background or dark characters on a light background. CBC Section 11B-703.5.1

   3) Height: Character height shall be determined based upon height above ground and horizontal viewing distance per CBC Table 11B-703.5.5.

4) Proportions: Visual Character proportions shall be selected from fonts where the width of the uppercase letter “O” is 60 % minimum and 110 % maximum of the height of the uppercase letter “I”. Stroke thickness shall be 10% minimum and 20% maximum of the height of the character. CBC Sections 11B-703.5.4 and 11B-703.5.7.

5) Character Spacing: Spacing between individual adjacent characters shall be 10% min. and 35% max of character height per CBC Section 11B-703.5.8.

6) Line Spacing: Spacing between separate lines of characters within a message shall comply with CBC Section 11B-703.5.9

k. Pictograms shall comply with CBC Section 11B-703.6.

l. Symbols of accessibility shall comply with CBC Section 11B-703.7.

m. Variable message signs shall comply with CBC Section 11B-703.8.

2.03 PANEL SIGNAGE

A. Panel Signage:

1. Application: Room and door signs.
2. Description: Flat signs with photopolymer plastic panel media, tactile characters.
3. Sign Size: As indicated on drawings.
4. Total Thickness: 1/8 inch.
5. Sign Edges: Squared.
6. Letter Edges: Squared.
7. Corners: Squared.
8. Color and Font, unless otherwise indicated:
   a. Character Font: Helvetica, Arial, or other sans serif font.
   b. Character Case: Upper and lower case (title case).
   c. Background Color: As scheduled.
   d. Character Color: Contrasting color.
9. Material: Laminated-Sheet Sign, Photopolymer face sheet with raised graphics laminated over subsurface graphics to acrylic or phenolic backing sheet to produce composite sheet.
10. Profile: Flat panel in aluminum frame.
    a. Frame Finish: Black anodized.
11. Tactile Letters: Raised 1/32 inch minimum.
12. Braille: Grade II, ADA-compliant.
13. One-Sided Wall Mounting: Concealed screws.

2.04 SIGNAGE APPLICATIONS

A. Room and Door Signs:

1. Rest Rooms: Identify with pictograms, the names "MEN" and "WOMEN", room numbers to be determined later, and braille.

a. Identify all single user toilet facilities as gender neutral facilities by a door symbol that complies with CBC Section 11B-216.8 and 11B-703.7.2.6.3.
   1) No pictogram, text, or braille is required.
   2) Tactile jamb signage shall comply with appropriate technical requirements of CBC Section 11B-703.
      (a) Examples of appropriate designations are "ALL-GENDER RESTROOM", "RESTROOM", or "UNISEX RESTROOM". DSA BU-17-01.
      (b) Provide "RESTROOM" as the signage text, unless indicated otherwise on Drawings.
   3) See Drawings for actual sign to be provided.

b. Geometric Symbols: The symbol color shall contrast with door or wall.
   1) Comply with CBC Section 11BCBC Ch. 11B-216.8.1 at the entrances to toilet and bathing rooms.
   2) Comply with CBC Section 11B-703.7.2.6.
      (a) Men's: An equilateral triangle, ¼ inch thick edges with edges 12 inches long and a vertex pointing upward.
      (b) Women's: A circle, ¼ inch thick and 12 inches in diameter.
      (c) Unisex (All Gender): A circle, ¼ inch thick and 12 inches in diameter with a equilateral triangle, ¼ inch thick edges with edges 12 inches long and a vertex pointing upward, superimposed on and geometrically inscribed within the circle and within the 12 inch diameter. The vertex of the triangle shall be located ¼ inch maximum from the edge of the circle. The triangle shall contrast with the circle symbol, either light on a dark background or dark on a light background. The circle symbol shall contrast with the door.
         (1) No pictogram is to be provided.
      (d) Mount within 1 inch of the centerline of the door at minimum 58 inches and 60 inches maximum from the centerline of the symbol to the finished floor surface.

2. Exits: Provide raised character and Braille exit signs per CBC Section 1013.4 at the following locations:

Text	**Location**
EXIT	Grade level exit door.
EXIT STAIR DOWN, EXIT STAIR UP	Exit door to exit stair.
EXIT RAMP DOWN, EXIT RAMP UP	Exit door to exit ramp.
EXIT ROUTE	Exit door to exit enclosure, exit passageway, exit corridor, or exit hallway.
TO EXIT	Exit door to horizontal exit.
EXIT WITH ALARM	Exit doors with an alarm.
EXIT ONLY or EXIT STAIR ONLY	Exit doors and stair exit doors which lock from outside and does not allow a return

B. Interior Directional and Informational Panel Signs:

1. Assistive Listening Devices, include International Symbol of Access for Hearing Loss complying with CBC Section 11B Figure 11B-703.7.2.4..

a. Include International Symbol of Access for Hearing Loss, CBC Section 11B Figure 11B-703.7.2.4, with text “Assistive-Listening System Available”. Use upper and lower case characters.

2.05 FABRICATION

A. Provide signs and supports factory-prefabricated and pre-finished, ready for assembly and installation.

2.06 ACCESSORIES

A. Concealed Screws: Noncorroding metal; stainless steel, galvanized steel, chrome plated, or other.

B. Exposed Screws: Stainless steel.

C. Tape Adhesive: Double-sided tape, permanent adhesive.

PART 3 EXECUTION

3.01 EXAMINATION

A. Verify that substrate surfaces are ready to receive work.

B. Notify Architect if conditions are not suitable for installation of signs; do not proceed until conditions are satisfactory.

3.02 INSTALLATION AT BUILDING

A. Install in accordance with manufacturer's instructions.

B. Install with horizontal edges level.

C. Locate panel signs and mount at heights indicated on drawings and in accordance with ADA Standards, CBC Chapter 11B, and applicable building codes.

1. Room and Door Signs: Locate on wall at latch side of door (per CBC Section 11B-703.4.2) a minimum of 48 inches to the baseline of the lowest braille cells; with baseline of highest line of raised character text at maximum 60 inches above finished floor.

a. Comply with CBC Section 11B-703.4.1 and CBC Ch. 11B11B -703.4.2

D. Protect from damage until final inspection; repair or replace damaged items.

3.03 FIELD QUALITY CONTROL

A. Inspect signs for information content, appearance, location and Braille per as noted in Section 01 45 33 - Code-Required Special Inspections and Procedures.

B. Inspect signs for information content, appearance, location and Braille:

1. Prior to issuance of a final Certificate of Occupancy, Enforcing Agency shall verify installation of signs for information content, appearance, location and Braille per CBC Section 11B-703.1.1.2.

a. Inspection includes, but not limited to:

1) Braille dots and cells are properly spaced and the size proportion and type raised characters are in compliance with these regulations.
2) Sanitary facilities signage per CBC Section 11B-216.8 Toilet rooms and bathing rooms; and CBC Section 11B-703.7.2.6 Toilet and bathing facilities geometric symbols.
3) Tactile exit signage per CBC 1013.4 and CBC Section 11B-216.4.1 Exit doors.

3.04 ADJUST AND CLEAN

A. Repair damage to signs incurred during installation. Replace signs which cannot be repaired to new condition. Clean glass, frames, and other sign surfaces, adjust hardware for proper operation.

END OF SECTION

SECTION 10 14 43
PHOTOLUMINESCENT SIGNAGE

PART 1 GENERAL

1.01 SECTION INCLUDES

A. Photoluminescent signs.

1.02 REFERENCE STANDARDS

A. ADA Standards - 2010 ADA Standards for Accessible Design.

B. ASTM E2072 - Standard Specification for Photoluminescent (Phosphorescent) Safety Markings.

C. CBC Chapter 11B - California Building Code-Chapter 11B.

D. NFPA 170 - Standard for Fire Safety and Emergency Symbols.

E. UL 924 - Emergency Lighting and Power Equipment.

F. UL 1994 - Luminous Egress Path Marking Systems.

1.03 SUBMITTALS

A. See Section 01 30 00 - Administrative Requirements for submittal procedures.

B. Product Data: Manufacturer's printed product literature for each type of sign, indicating sign styles, font, foreground and background colors, locations, and overall dimensions of each sign.

C. Shop Drawings: Indicate dimensions, locations, elevations, materials, text and graphic layout, and attachment details.

D. Samples: Submit two samples of each type of photoluminescent sign, of size similar to that required for project, indicating style, font, and method of attachment.

E. Manufacturer's Installation Instructions: Include installation templates and attachment devices.

F. Manufacturer's qualification statement.

1.04 QUALITY ASSURANCE

A. Manufacturer Qualifications: Company specializing in manufacturing the products specified in this section with minimum three years of documented experience.

1.05 DELIVERY, STORAGE, AND HANDLING

A. Package photoluminescent signs as required to prevent damage before installation.

B. Store under cover and elevated above grade.

C. Store tape adhesive at normal room temperature.

1.06 FIELD CONDITIONS

A. Do not install tape adhesive when ambient temperature is lower than recommended by manufacturer.

B. Maintain minimum ambient temperature during and after installation.

PART 2 PRODUCTS

2.01 REGULATORY REQUIREMENTS

A. Accessibility Requirements: Comply with ADA Standards, CBC Chapter 11B, and applicable building codes, unless otherwise indicated; in the event of conflicting requirements, comply with the most restrictive requirements.

2.02 PHOTOLUMINESCENT SIGNS

A. Photoluminescent Signagefor Exit Signs for ___:

1. Comply with CBC 1013.5 and 1013.7 Floor Level Exit Signs.
2. Comply with NFPA 170, UL 1994, and ASTM E2072. Listing: UL 924.
3. California State Fire Marshal Approval: Yes.
4. Application: Directional.
5. Size: 14.25 inches by 7.5 inches, Nominal.
6. Thickness: 0.32 inch.
7. Mounting: Wall mounted.
8. Mounting Bracket: Anodized aluminum; Wall mount, dual facing where indicated on Drawings.
9. Visibility Rating: 50 feet.
10. Graphics: 6 inches high.
    a. Comply with CBC 1013.6.1.
11. Symbol: Chevron.
12. Material: Photoluminescent pigment on powder coated aluminum substrate.
13. Vandal Resistant.
14. Warranty: 30 Years.
15. Products:
    a. Basis of Design Product: Exit Sign, FRUL-050-B as manufactured by NightBright USA, nightbrightusa.com, or approved equal.
    b. Active Safety; ECO-CLEAR Series 2003: www.activesafety.com.
    c. ELCO Lighting; EE81S Self Illuminating Exit Sign (Red Letters): elcolighting.com.
    d. Safe-T-Nose, LLC; Photoluminescent Exit Sign (EUL50): www.safetnose.com/#sle.
    e. Or Equal Substitutions: See Section 01 60 00 - Product Requirements.

2.03 ACCESSORIES

A. Tape Adhesive: Double-sided tape, permanent adhesive.

PART 3 EXECUTION

3.01 EXAMINATION

A. Verify that substrate surfaces are ready to receive work.

B. Notify Architect if conditions are not suitable for installation of signs; do not proceed until conditions are satisfactory.

3.02 INSTALLATION

A. Install in accordance with manufacturer's instructions.

B. Install with horizontal edges level.

C. Locate photoluminescent signs and mount at heights indicated on drawings and in accordance with ADA Standards and ICC A117.1.

D. Protect from damage until mm-dd-yyyy; repair or replace damaged items.

END OF SECTION

SECTION 26 01 00
ELECTRICAL GENERAL PROVISIONS

PART 1 - SUMMARY

1.1 This Division of the specification outlines the provisions of the contract work to be performed under this Division.

1.2 This Section applies to and forms a part of each section of specifications in Division 26 and all work performed under Division 26, 27 and 28.

1.3 In addition, work in this Division is governed by the provisions of the bidding requirements, contract forms, general conditions and all sections under general requirements.

1.4 These specifications contain statements which may be more definitive or more restrictive than those contained in the General Conditions. Where these statements occur, they shall take precedence over the General Conditions.

1.5 Where the words 'provide' or 'provision' are used, it shall be definitely interpreted as 'furnishing and installing complete in operating condition'. Where the words 'as indicated' or 'as shown' are used, it shall mean as shown on contract drawings.

1.6 Where items are specified in the singular, this Division shall provide the quantity as shown on drawings plus any spares or extras mentioned on drawings or specifications. All specified and supplied equipment shall be new.

PART 2 - CONTRACTOR QUALIFICATIONS

2.1 The Contractor shall have a current California C-10 Electrical Contractor's license and all individuals working on this project shall have passed the Department of Industrial Relations Division of apprenticeship Standards – "Electrician Certification Program."

PART 3 - CODES, PERMITS AND FEES

3.1 Comply with all applicable laws, ordinances, rules, regulations, codes, or rulings of governmental units having jurisdiction as well as standards of CEC and serving utility requirements.

3.2 Obtain permits, fees, inspections, meter and the like, associated with work in each section of this Division.

3.3 Installation procedures, methods and conditions shall comply with the latest requirements of the Federal Occupational Safety and Health Act (OSHA).

PART 4 - EXAMINATION OF PREMISES

4.1 Examine the construction drawings and premises prior to bidding. No allowances will be made for not being knowledgeable of existing conditions.

PART 5 - STANDARDS

5.1 The following standard publications of the latest editions enforced, and supplements thereto shall form a part of these specifications. All electrical work must, as a minimum, be in accordance with these standards.

5.1.1 2025 California Electrical Code (CEC), Part 3 Title 24 CCR.
5.1.2 National Fire Protection Association.
5.1.3 Underwriters' Laboratories, Inc. (UL).
5.1.4 Certified Ballast Manufacturers' Association (CBM).
5.1.5 National Electrical Manufacturers' Association (NEMA).
5.1.6 Institution of Electrical & Electronics Engineers (IEEE).
5.1.7 American Society for Testing & Materials (ASTM).
5.1.8 National Board of Fire Underwriters (NBFU).
5.1.9 National Board of Standards (NBS).
5.1.10 American National Standards Institute (ANSI).
5.1.11 Insulated Power Cable Engineers Association (IPECS).
5.1.12 Electrical Testing Laboratories (ETL).
5.1.13 National Electrical Safety Code (NESC).
5.1.14 2025 California Building Code (CBC), Part 2, Title 24 CCR.
5.1.15 2025 California Fire Code (CFC), Part 9, Title 24, CCR.
5.1.16 2025 NFPA 72 with California State Amendments
5.1.17 National Electrical Testing Association (NETA), 2010 or most current

PART 6 - DEFINITIONS

6.1 Concealed: Hidden from sight, as in trenches, chases, hollow construction, or above furred spaces, hung ceilings - acoustical or plastic type, or exposed to view only in tunnels, attics, shafts, crawl spaces, unfinished spaces, or other areas solely for maintenance and repair.

6.2 Exposed, Non-Concealed, Unfinished Space: A room or space that is ordinarily accessible only to building maintenance personnel, a room noted on the 'finish schedule' with exposed and unpainted construction for walls, floors, or ceilings or specifically mentioned as 'unfinished'.

6.3 Finish Space: Any space ordinarily visible, including exterior areas.

PART 7 - WORK AND MATERIALS

7.1 Unless otherwise specified, all materials must be new and of the best quality. Materials previously incorporated into other projects, salvaged, or refurbished are not considered new. Perform all labor in a thorough and workmanlike manner.

7.2 All materials provided under the contract must bear the UL label where normally available. Note that this requirement may be repeated under equipment specifications. In general, such devices as will void the label should be provided in separate enclosures and wired to the labeled unit in proper manner.

PART 8 - SHOP DRAWINGS AND SUBMITTALS

8.1 Submit shop drawings and all data in accordance with Division 1 of these specifications and as noted below for all equipment provided under this Division.

8.2 Shop drawings submittals demonstrate to the Architect that the Contractor understands the design concept. The Contractor demonstrates their understanding by indicating which equipment and material they intend to furnish and install and by detailing the fabrication and installation methods of material and equipment he intends to use. If deviations, discrepancies, or conflicts between submittals and specifications are discovered either prior to or after submittals are processed, notify the Architect immediately.

8.3 Manufacturer's data and dimension sheets shall be submitted giving all pertinent physical and engineering data including weights, cross sections and maintenance instructions. Standard items of equipment such as receptacles, switches, plates, etc., which are cataloged items, shall be listed by manufacturer.

8.4 Index all submittals and reference them to these specifications. All submittal items shall be assembled and submitted, one for each specification section. (Multiple specification sections may be grouped together in one common submittal binder, as long as each individual section is clearly identified.) Partial or incomplete submittal sections will not be reviewed.

PART 9 - EQUIPMENT PURCHASES

9.1 Arrange for purchase and delivery of all materials and equipment within 20 days after approval of submittals. All materials and equipment must be ordered in ample quantities for delivery at the proper time. If items are not on the project in time to expedite completion, the Owner may purchase said equipment and materials and deduct the cost from the contract sum.

9.2 Provide all materials of similar class or service by one manufacturer.

PART 10 - COOPERATIVE WORK

10.1 Correct without charge any work requiring alteration due to lack of proper supervision or failure to make proper provision in time. Correct without charge any damage to adjacent work caused by the alteration.

10.2 Cooperative work includes: General supervision and responsibility for proper location and size of work related to this Division, but provided under the other sections of these specifications, and installation of sleeves, inserts, and anchor bolts for work under each section in this Division.

PART 11 - VERIFICATION OF DIMENSIONS

11.1 Scaled and figured dimensions are approximate only. Before proceeding with work, carefully check and verify dimensions, etc., and be responsible for properly fitting equipment and materials together and to the structure in spaces provided.

11.2 Drawings are essentially diagrammatic, and many offsets, bends, pull boxes, special fittings, and exact locations are not indicated. Carefully study drawings and premises in order to determine best methods, exact location, routes, building obstructions, etc. and install apparatus and equipment in manner and locations to avoid obstructions, preserve headroom, keep openings and passageways clear, and maintain proper clearances.

PART 12 - CLOSING-IN OF UNINSPECTED WORK

12.1 Cover no work until inspected, tested, and approved by the Architect. Where work is covered before inspection and test, uncover it and when inspected, tested, and approved, restore all work to original proper condition at no additional cost to Owner.

PART 13 - EXCAVATION AND BACKFILL

13.1 All excavation and backfill shall be in accordance with Division 1 of these specifications and as noted below.

13.2 Perform all necessary excavation, shoring, and backfilling required for the proper laying of all conduits inside the building and premises, and outside as may be necessary.

13.3 Excavate all trenches open cut, keep trench banks as nearly vertical as practicable, and sheet and brace trenches where required for stability and safety. Excavate trenches true to line and make bottoms no wider than necessary to provide ample work room. Grade trench bottoms accurately. Machine grade only to the top line of the conduits, doing the remainder by hand. Do not cut any trench near or under footings without first

consulting the Architect. All trenches shall be done in accordance with OSHA standards and regulations.

13.4 Backfilling shall be done with each layer compacted before another layer is added. No stones or coarse lumps shall be laid directly on a conduit or conduits.

13.5 Trenches shall be filled with the specified material. Sod, if any, shall be removed in cut sections and replaced in same manners.

13.6 Provide pumps and drainage of all open trenches for purposes of installing electrical duct and wiring.

13.7 Perform all backfilling in accordance with the requirements of and under the direction of the Geotechnical Engineer.

13.8 Where new underground trenching is required on sites or in any area where existing underground utilities exist, the Contractor shall provide an independent professional utility locating service to locate exact vertical and horizontal locations of all existing utilities. Where existing utilities are found the Contractor shall hand dig those areas to avoid disruption. The Contractor shall be responsible for immediate repairs to existing underground utilities damaged during construction. The Contractor shall repair all existing asphalt, concrete and landscape surfaces damaged or removed during construction to match their original conditions. Where trenching extends through public streets or roadways, the Contractor shall notify underground service alert in addition to the independent locating service 48 hours before start of construction to determine location of existing utilities by calling (800) 422-4133.

PART 14 - CONCRETE

14.1 Where used for structures to be provided under the contract such as bases, etc., concrete work, and associated reinforcing shall be as specified under Division 3 of these specifications.

14.2 See other sections for additional requirements for underground vaults, cable ducts, etc.

PART 15 - ACCESSIBILITY

15.1 Install all control devices or other specialties requiring reading, adjustment, inspection, repairs, removal, or replacement conveniently and accessibly throughout the finished building.

15.2 All required access doors or panels in walls and ceilings are to be furnished and installed as part of the work under this Section. Refer to Division 1 of these specifications and as noted below.

15.3 Where located in fire rated assemblies, provide doors which match the rating of the assembly and are approved by the jurisdictional authority.

15.4 Refer to 'finish schedule' for types of walls and ceilings in each area and the architectural drawings for rated wall construction.

15.5 Coordinate work of the various sections to locate specialties requiring accessibility with others to avoid unnecessary duplication of access doors.

PART 16 - FLASHING

16.1 Flash and counter flash all conduits penetrating roofing membrane as shown on Architectural drawings. All work shall be in accordance with Division 7 of these specifications.

PART 17 - IDENTIFICATION OF EQUIPMENT

17.1 All electrical equipment shall be labeled, tagged, stamped, or otherwise identified in accordance with the following schedules:

17.1.1 General:

17.1.1.1 In general, the installed laminated nameplates as hereinafter called for shall also clearly indicate its use, areas served, circuit identification, voltage and any other useful data.

17.1.1.2 All auxiliary systems, including communications, shall be labeled to indicate function.

17.1.2 Lighting and Local Panelboards:

17.1.2.1 Panel identification shall be with white and black micarta nameplates. Letters shall be no less than 3/8" high.

17.1.2.2 Circuit directory shall be two column typewritten card set under glass or glass equivalent. Each circuit shall be identified by the room number and/or number of unit and other pertinent data as required.

17.1.3 Distribution Switchboards and Feeders Sections:

17.1.3.1 Identification shall be with 1" x 4" laminated white micarta nameplates with black lettering on each major component, each with name and/or number of unit and other pertinent data as required. Letters shall be no less than 3/8" high.

17.1.3.2 Circuit breakers and switches shall be identified by number and name with 3/8" x 1-1/2" laminated micarta nameplates with 3/16" high letters mounted adjacent to or on circuit breaker or switch.

17.1.4 Disconnect Switches, Motor Starters and Transformers:

17.1.4.1 Identification shall be with white micarta laminated labels and 3/8" high black lettering.

17.1.5 All communication system terminal boxes including T.V., telephone/intercom, security, fire alarm, clock, and computer networking shall be provided with white micarta laminated labels and 3/8" high black lettering.

PART 18 - CONSTRUCTION FACILITIES

18.1 Furnish and maintain from the beginning to the completion all lawful and necessary guards, railings, fences, canopies, lights, warning signs, etc. Take all necessary precautions required by City, State Laws, and OSHA to avoid injury or damage to any persons and property.

18.2 Temporary power and lighting for construction purposes shall be provided under this Section. All work shall be in accordance with Division 1 of these specifications.

PART 19 - GUARANTEE

19.1 Guarantee all material, equipment and workmanship for all sections under this Division in writing to be free from defect of material and workmanship for one year from date of final acceptance, as outlined in the general conditions. Replace without charge any material or equipment proven defective during this period. The guarantee shall include performance of equipment under all site conditions, conditions of load, installing any additional items of control and/or protective devices, as required.

PART 20 - PATENTS

20.1 Refer to the General Conditions for Contractor's responsibilities regarding patents.

PART 21 - EQUIPMENT ROUGH-IN

21.1 Rough-in all equipment, fixtures, etc. as designed on the drawings and as specified herein. The drawings indicate only the approximate location of rough-ins. Mounting heights of all switches, receptacles, wall mounted fixtures and such equipment must be coordinated with the Architectural Designs. The Contractor shall obtain all rough-in information before progressing with any work for rough-in connections. Minor changes

in the contract drawings shall be anticipated and provided for under this Division of the specifications to comply with rough-in requirements.

PART 22 - OWNER FURNISHED AND OTHER EQUIPMENT

22.1 Rough-in and make final connections to all Owner furnished equipment shown on the drawings and specified, and all equipment furnished under other sections of the specifications.

PART 23 - EQUIPMENT FINAL CONNECTIONS

23.1 Provide all final connections for the following:

23.1.1 All equipment furnished under this Division.

23.1.2 Electrical equipment furnished under other sections of the specification.

23.1.3 Owner furnished equipment as specified under this Division.

PART 24 - INSERTS, ANCHORS, AND MOUNTING SLEEVES

24.1 Inserts and anchors must be:

24.1.1 Furnished and installed for support of work under this Division.

24.1.2 Mounting of equipment that is of such size as to be free standing and that equipment which cannot conveniently be located on walls, such as motor starters, etc., shall be rigidly supported on a framework of galvanized steel angle of Unistrut or B-line systems with all unfinished edges painted.

24.1.3 Furnish and install all sleeves as required for the installation of all work under all Sections of this Division and for all communication systems including any communication systems described in this Section which are bid to the General Contractor. Sleeves through floors, roof, and walls shall be as described in "Conduit and Fittings" Section 26 05 33.

PART 25 - SEISMIC ANCHORING

25.1 All switchgear and other free-standing electrical equipment or enclosures shall be anchored to the floor and braced at the top of the equipment to the structure. The Contractor shall submit drawings signed by the Contractors registered structural Engineer indicating method of compliance prior installation.

25.2 All sound systems, communication, signal or data networking equipment or enclosures shall be anchored to the structure. The Contractor shall submit drawings signed by the

Contractors registered Structural Engineer indicating method of compliance prior to installation.

PART 26 - RUST PROOFING

26.1 Rust proofing must be applied to all ferrous metals and shall be in accordance with Section 05500 of these specifications and as noted below.

26.1.1 Hot-dipped galvanized shall be applied and after forming of angle-iron, bolts, anchors, etc.

26.1.2 Hot-dipped galvanized coating shall be applied after fabrication for junction boxes and pull boxes cast in concrete.

PART 27 - GENERAL WIRING

27.1 Where located adjacent in walls, outlet boxes shall not be placed back to back, nor shall extension rings be used in place of double boxes, all to limit sound transmission between rooms. Provide short horizontal nipple between adjacent outlet boxes, which shall have depth sufficient to maintain wall coverage in rear by masonry wall.

27.2 In those instances where outlet boxes, recessed terminal boxes, or recessed equipment enclosures are installed in a fire rated assembly, provide "Flamesafe FSD 1077" fire stopping pads or approved equal, over the outlet or box.

27.3 Complete rough-in requirements of all equipment to be wired under the contract are not indicated. Coordinate with respective trades furnishing equipment or with the Architect as the case may be for complete and accurate requirements to result in a neat, workmanlike installation.

PART 28 - SEPARATE CONDUIT SYSTEMS

28.1 Each electrical and signal system shall be contained in a separate conduit system as shown on the drawings and as specified herein. This includes each power system, each lighting system, each signal system of whatever nature, telephone, standby system, sound system, control system, fire alarm system, etc.

28.2 Further, each item of building equipment must have its own run of power wiring. Control wiring may be included in properly sized conduit for equipment feeders of #6 AWG and smaller, having separate conduit for larger sizes.

PART 29 - CLEANUP

29.1 In addition to cleanup specified under other sections, thoroughly clean all parts of the equipment. Where exposed parts are to be painted, thoroughly clean off any spattered construction materials and remove all oil and grease spots. Wipe the surface carefully and scrape out all cracks and corners.

29.2 Use steel brushes on exposed metal work to carefully remove rust, etc., and leave smooth and clean.

29.3 During the progress of the work, keep the premises clean and free of debris.

PART 30 - PAINTING

30.1 Paint all unfinished metal as required in accordance with Division 1 of these specifications. (Galvanized and factory painted equipment shall be considered as having a sub-base finish.)

PART 31 - GENERAL DEMOLITION REQUIREMENTS

31.1 Remove existing work and items which are required to be removed in such manner that minimum damage and disturbance is caused to adjacent and connection work scheduled to remain. Repair or replace existing work schedule.

31.2 Include preparation of existing areas to receive new materials and removal of materials and equipment to alter or repair the existing building as indicated and as specified.

31.3 Perform demolition exercising proper care to prevent injury to the public, workmen and adjoining property.

31.4 Perform the removal, cutting, drilling of existing work with extreme care and use small tools in order not to jeopardize the structural integrity of the building.

31.5 Rebuild to existing condition or better, existing work which has to be removed to allow the installation of new work as required.

31.6 Remove, protect and reinstall existing items as indicated. Replace materials scheduled for reuse which are damaged by the Contractor to the extent that they cannot be reused, with equal quality material, and installation.

31.7 Do not reuse in this project materials and items removed from existing site or building, except with specific written approval by the Architect in each case, unless such removed material or item is specifically indicated or specified to be reused.

31.8 Remove materials and equipment indicated to be salvaged for reinstallation and store to prevent damage and reinstall as the work progresses. Do not reuse in this project, other materials and equipment removed from existing site or building, except with specific written approval by the Architect in each case.

31.9 Patch areas requiring patching, including damage caused by removing, relocating or adding fixtures and equipment, damages caused by demolition at adjacent materials.

31.10 Do not stockpile debris in the existing building, without the approval of the Architect. Remove debris as it accumulates from removal operations to a legal disposal area.

31.11 Contractor to assume existing oil filled and dry transformers, oil switches, ballasts, lamps, wooden poles, cross arms, computers, computer monitors, and conductor insulation containing materials considered hazardous. Comply with local, state and federal regulations, laws, and ordinances concerning removal, handling and protection against exposure or environmental pollution. Contractor shall be responsible for removal of the above hazardous materials where encountered. Include all costs for such removal as part of this contract.

31.12 All fluorescent, compact fluorescent, high intensity discharge, metal halide, mercury vapor, high and low-pressure sodium, and neon lamps are to be disposed of as required by the California Waste Rule Regulations as described in the California Code of Regulations, Title 22, Division 4.5 and Chapter 23.

31.13 **Communication System:** Where new communication systems, (including telephone, intercom, clock, security, fire alarm, data, multimedia, CATV or lighting controls) are installed to replace existing systems, unless where otherwise directed the existing systems shall remain fully operational until the new system has been installed and tested. Demolition of the existing systems shall include removal of all equipment and associated wiring and exposed conduits and providing new blank covers for all abandoned device locations.

31.14 **Salvage Power Equipment:** The Contractor shall carefully remove all existing switchboards, panelboards, transformers, and confirm in writing which items the Owner wishes to keep. These items shall be transported to the Owner's maintenance facilities by the Contractor. All remaining items shall be disposed of by the Contractor.

31.15 **Salvage Lighting Equipment:** The Contractor shall confirm in writing which items the Owner wishes to keep. These items shall be transported to the Owner's maintenance facilities by the Contractor. All remaining items shall be disposed of by the Contractor.

31.16 **Salvage Communication Equipment:** The Contractor shall carefully remove all communication devices (telephone, intercom, clock, security, fire alarm, data, multimedia, CATV or lighting controls) and box each type of devices separately. The Contractor shall deliver all items to the Owner's maintenance facility.

PART 32 - PROJECT CLOSEOUT

32.1 Prior to completion of project, compile a complete equipment maintenance manual for all equipment supplied under sections of this Division, in accordance with Division 1 of these specifications and as described below.

32.2 Equipment Lists and Maintenance Manuals:

32.2.1 Prior to completion of job, Contractor shall compile a complete equipment list and maintenance manuals. The equipment list shall include the following items for every piece of material equipment supplied under this Section of the specifications:

32.2.1.1 Name, model, and manufacturer.

32.2.1.2 Complete parts drawings and lists.

32.2.1.3 Local supply for parts and replacement and telephone number.

32.2.1.4 All tags, inspection slips, instruction packages, etc., removed from equipment as shipped from the factory, properly identified as to the piece of equipment it was taken from.

32.3 Maintenance manuals shall be furnished for each applicable section of the specifications and shall be suitably bound with hard covers and shall include all available manufacturers' operating and maintenance instructions, together with "as-built" drawings to properly operate and maintain the equipment. The equipment lists and maintenance manuals shall be submitted in duplicate to the Architect for approval not less than 10 days prior to the completion of the job. The maintenance manuals shall also include the name, address, and phone numbers of all subcontractors involved in any of the work specified herein. Four copies of the maintenance manuals bound in single volumes shall be provided.

PART 33 - RECORD DRAWINGS

33.1 The Division 26 Contractor shall maintain record drawings as specified in accordance with Division 1 of these specifications, and as noted below.

33.2 Drawings shall show locations of all concealed underground conduit runs, giving the number and size of conduit and wires. Underground ducts shall be shown with cross section elevations and shall be dimensioned in relation to permanent structures to indicate their exact location. Drawing changes shall not be identified only with referencing CORs and RFIs, the drawings shall reflect all of the actual additions or changes made. All as-built drawing information shall be prepared by the contractor in AutoCAD, updating the contract computer files as needed to reflect actual installed conditions for all site plans, lighting, power, communication, networking, audio visual, security or fire alarms systems included in the scope of work for this project.

33.3 One set of these record drawings shall be delivered to the Architect. The engineer will review documents for completeness and will not be responsible for editing contractor computer files.

PART 34 - CHANGES AND EXTRA WORK

34.1 When **changes** in work are requested, the Division 26 Contractor shall provide unit prices for the work involved in accordance with Division 1 of these specifications, and the following:

34.1.1 The material Costs shall **not exceed** the invoice pricing from an Electrical Distributor indicating the pricing provided at the time of bid. The Contractor shall submit a print out copy of the pricing with the change order to substantiate these values.

34.1.2 The labor Costs shall **not exceed** the latest edition of the "NECA Manual of Labor Units" **normal column**.

34.2 When **credits** in work are requested, the Division 26 Contractor shall provide unit prices for the work involved in accordance with Division 1 of these specifications, and the following:

34.2.1 The Material Costs shall **not be less than 80% of** the invoice pricing from an Electrical Distributor indicating the pricing provided at the time of bid. Restocking fees may also be included in this amount where applicable.

34.2.2 The Labor Costs shall **not be less than 80% of** the latest edition of the "NECA Manual of Labor Units" **normal column**.

34.3 Conduit pricing for conduits of all types sized 3" or smaller.

When changes in the scope of work require the Contractor to estimate conduit Installations, they shall **NOT include labor values (only material cost may be included)** for any of the below items. The labor values for conduit installation represented in the NECA manual are inflated to a point where additional labor for the below items can not be justified.

34.3.1 Couplings.

34.3.2 Set Screw or Compression Fittings, locknuts, Bushings and washers.

34.3.3 Conduit straps and associated screws or nails.

34.3.4 LB fittings or other specialty fittings or specialty mounting hardware may be included where needed.

34.4 Wire pricing for all types and sizes.

When changes in the scope of work require the Contractor to estimate wire installations, they shall **NOT include labor values (only material cost may be included)** for any of the below items. The labor values for wire installation represented in the NECA manual are inflated to a point where additional labor for the below items can not be justified.

34.4.1 Locknuts, Bushings, tape, wire markers.

34.5 When changes in the scope of work require other equipment installations such as lighting fixtures, panelboards, switchboards, wiring devices, communications equipment etc. the Contractor shall **NOT include labor values (only material cost may be included)** for any of the below items. The labor values for these equipment items represented in the NECA manual are inflated to a point where additional labor for the below items can not be justified.

34.5.1 Associated screws, nails, bolts, anchors or supports.

34.5.2 Locknuts, washers, tape.

34.6 The total labor hours for extra work will be required to be calculated as follows:

34.6.1 Change orders with 1 to 30 total labor hours

General Laborer	10%	of total labor hours
Journeyman	10%	of total labor hours
Foreman	80%	of total labor hours

34.6.2 Change orders with 31 to 100 total labor hours

General Laborer	20%	of total labor hours
Journeyman	40%	of total labor hours
Foreman	40%	of total labor hours

34.6.3 Change orders with over 100 total labor hours

General Laborer	30%	of total labor hours
Journeyman	50%	of total labor hours
Foreman	20%	of total labor hours

34.7 When change orders are issued which allow the work to be completed in the normal sequence of construction, the labor rates shall be based on the most current “Prevailing Wage” – straight time total hourly rate. When change orders require the Contractor to work out of sequence the “Prevailing Wage“– daily overtime hourly rate shall apply. Special condition situations shall be reviewed on an individual basis for alternate hourly rate schedules.

34.8 Costs **will not** be permitted for additional supervision on site or office time for processing any change order other than the 10% overhead allowance as described in Division 1. Cost for special equipment required to install items for an individual change order are permitted and must be individually identified. Lump Sum cost for small tools or any other cost not specifically required for the change order are not permitted.

34.9 Contractor estimates shall be formatted to clearly identify each of the following:

34.9.1 Line item description of each type of material or labor item.

34.9.2 Description of quantity for each item.

34.9.3 Description of (material cost per / quantity).

34.9.4 Description of (labor cost per / quantity).

34.9.5 Description of total labor hour breakdown per Foreman, Journeyman or General Laborer as described above.

PART 35 - ELECTRONIC FILES

35.1 The Contractor shall make a ***written*** request directly to Johnson Consulting Engineers for electronic drawing files. As a part of the written request, please include the following information:

35.1.1 Clearly indicate each drawing sheet needed (i.e., E1.1, E2.1, etc.).

35.1.2 Identify the name, phone number, mailing address and e-mail address of the person to receive the files.

35.1.3 Provide written confirmation and agreement with the requirements described for payment of computer files, as described below.

35.2 Detail or riser diagram sheets, or any other drawings other than floor plans or site plans, ***will not be made available to the Contractor***.

35.3 Files will only be provided in the AutoCAD format in which they were created.

35.4 Requests for files will be processed as soon as possible; a minimum of 7 working days should be the normal processing time. The Contractor shall be completely responsible for requesting the files in time for their use.

END OF SECTION

SECTION 26 05 19
POWER CONDUCTORS

PART 1 – GENERAL

1.1 Furnish and install wire and cable for branch circuits and feeders specified herein and as shown on the electrical drawings.

1.2 Submittals: Submit manufacturers' data for the following items:

1.2.1 All cables and terminations

1.3 <u>Common submittal mistakes which will result in the submittals being rejected:</u>

1.3.1 Not including all items listed in the above itemized description.

1.3.2 Including catalog cut sheets which have several items on a page, and not clearly identifying by highlighting, underlining, or clouding the items to be reviewed, or crossing out the items which are not applicable.

1.3.3 Not including actual manufacturer's catalog information of proposed products.

1.3.4 Do not include multiple manufacturers for similar products and do not indicate "or approved equal" statements, or "to be determined later" statements. The products being submitted must be the products installed

PART 2 – PRODUCTS

2.1 Wire and cable Rated 120 volt to 600 volt.

2.1.1 All wire and cable shall be new, 600 volt insulated copper, of types specified below for each application. All wire and cable shall bear the UL label and shall be brought to the job in unbroken packages. Wire insulation shall be the color as specified herein and shall be type THWN-2. Insulated conductors shall be installed in all exterior exposed raceways. Conductors for branch circuit lighting, receptacle, power and miscellaneous systems shall be a minimum of No. 12 AWG. Increase conductor size to No. 10 AWG for 120 volt circuits greater than 100 feet from the panel to the load and for 277 volt circuits greater than 200 feet from the panel to the load. Circuit homeruns indicated to be larger than No. 12 must be increased the entire length of the circuit, including equipment grounding conductor. Wire sizes No. 14 through No. 10 shall be solid. No. 8 and larger shall be stranded.

2.1.2 Aluminum conductors will be permitted (only where specifically identified on the drawings. See "600 Volt Feeder Schedule") in sizes 2/0 or larger.

Conductors shall be listed by Underwriters Laboratories (UL) and suitable for operation at 600 volts or less, at a maximum operating temperature of 90N C maximum in wet or dry locations. Conductors shall be marked "SUN-RES". Aluminum alloy conductors shall be compact stranded conductors of STABILOY® (AA-8030) as manufactured by Alcan Cable or Listed equal. AA-8000 Series aluminum alloy conductor material shall be recognized by The Aluminum Association

2.2 Wire and cable for systems below120 volts.

2.2.1 All low voltage and communications systems cables routed underground shall be provided with a moisture resistant outer jacket, West Penn "Aquaseal" or equal, unless otherwise specified.

PART 3 - EXECUTION

3.1 Wire and cable shall be pulled into conduits without strain using powdered soapstone, mineralac, or other approved lubricant. In no case shall wire be repulled if same has been pulled out of a conduit run for any purpose. No conductor shall be pulled into conduit until conduit system is complete, including junction boxes, pull boxes, etc.

3.2 All connections of wires shall be made as noted below:

3.2.1 Connections to outlets and switches: Wire formed around binding post of screw.

3.2.2 No. 10 wire and smaller: Circuit wiring connections to lighting fixtures and other hard wired equipment shall be made with pressure type solderless connectors, Buchanan, Scotchlock, Wing Nut, or approved equal. Alternate "WAGO" #773 series or "IDEAL" #32, 33, 34 and 39 series push wire style connectors are also acceptable.

3.3 All wiring shall be continuous without splicing unless where specifically noted on the drawings or where permitted below.

3.3.1 No. 10 wire and smaller above grade: Quantities as needed, connection made with pressure type solderless connectors, Scotchlock or equal.

3.3.2 No. 10 wire and smaller below grade: Quantities as needed, connection made with 'Raychem' long barrel compression terminals with crimping tool and quantity of crimps as recommended by manufacturer, provide 'Raychem' WCSM-S series in-line heat shrink, sealant coated splice kit. Alternate products must be UL listed for direct burial/submersible and rated to (1000V).

3.3.3 No. 8 wire and larger above grade: Quantities <u>only</u> where indicated, 'Raychem' long barrel compression terminals with crimping tool and quantity of crimps as

recommended by manufacturer, provide 'Raychem' WCSM-S series in-line heat shrink, sealant coated splice kit. Alternate products must be UL listed for direct burial/submersible and rated to (1000V).

3.3.4 No. 8 wire and larger below grade: Quantities only where indicated, 'Raychem' long barrel compression terminals with crimping tool and quantity of crimps as recommended by manufacturer, provide 'Raychem' WCSM-S series in-line heat shrink, sealant coated splice kit. Alternate products must be UL listed for direct burial/submersible and rated to (1000V).

3.4 All wiring throughout shall be color coded as follows:

	480 volt system	208 or 240 volt system
A Phase	Brown	Black
B Phase	Orange	Red
C Phase	Yellow	Blue
Neutral	Grey	White
Ground	Green	Green

3.5 Wiring must be color coded throughout its entire length, except feeders may have color coded plastic tape at both ends and any other accessible point.

3.6 All control wiring in a circuit shall be color coded, each phase leg having a separate color, and with all segments of the control circuit, whether in apparatus or conduit, utilizing the same color coding.

3.7 At all terminations of control wiring, the wiring shall have a numbered T&B or Brady plastic wire marker.

3.8 Cables when installed are to be properly trained in junction boxes, etc., and in such a manner as to prevent any forces on the cable which might damage the cable.

3.9 All conductors to be installed into a common raceway, shall be pulled into the raceway at the same time.

3.10 All conductors shall be installed in such a manner as to not exceed the manufacturers' recommended pulling tension and bending radius. The equipment used for pulling must be specifically designed for the purpose. Motorized vehicles such as pickup trucks, are not acceptable.

END OF SECTION

SECTION 26 05 26
GROUNDING

PART 1 – GENERAL

1.1 Furnish and install grounding and grounding conductors and electrodes as specified herein and as shown on the drawings.

1.2 Submit catalog data for all components.

1.3 **Common submittal mistakes which will result in the submittals being rejected:**

1.3.1 Not including all items listed in the above itemized description.

1.3.2 Including catalog cut sheets which have several items on a page, and not clearly identifying by highlighting, underlining or clouding the items to be reviewed, or crossing out the items which are not applicable.

1.3.3 Not including actual manufacturer's catalog information of proposed products.

1.3.4 Do not include multiple manufacturers for similar products and do not indicate "or approved equal" statements, or "to be determined later" statements. The products being submitted must be the products installed.

PART 2 – EXECUTION

2.1 Grounding

2.1.1 All panelboard cabinets, equipment, enclosures, and complete conduit system shall be grounded securely in accordance with pertinent sections of CEC Article 250. Conductors shall be copper. All electrically operated equipment shall be bonded to the grounded conduit system. All non-current carrying conductive surfaces that are likely to become energized and subject to personal contact shall be grounded by one or more of the methods detailed in CEC Article 250. All ground connections shall have clean contact surfaces. Install all grounding conductors in conduit and make connections readily accessible for inspection.

2.1.2 Provide an insulated equipment grounding conductor in all branch circuit and feeder raceway systems, sized in accordance with CEC 250-1122.

2.1.3 Provide an additional individual insulated grounding conductor for each circuit which contains an isolated ground receptacle or surge suppression receptacle.

2.1.4 Grounding of metal raceways shall be assured by means of provisions of grounding bushings on feeder conduit terminations at the panelboard, and by

means of insulated continuous stranded copper grounding wire extended from the ground bus in the panelboard to the conduit grounding bushings.

2.1.5 Except for connections which access for periodic testing is required, make grounding connections which are buried or otherwise inaccessible by exothermite type process.

2.1.6 The following ohmic values shall be test certified for each item listed. A written report signed and witnessed by the project IOR shall be provided to the engineer. If the ohmic value listed cannot be obtained additional grounding shall be installed to reach the value listed.

2.1.6.1 Service. . . . . .10 ohms.

2.1.6.2 Step down transformers and non-current carrying metal parts . . . . . 25 ohms.

2.1.6.3 Manholes, handholes, etc. . . . . 10 ohms.

END OF SECTION

SECTION 26 05 33
CONDUIT AND FITTINGS

PART 1 – GENERAL

1.1 Furnish and install conduit and fittings as shown on the drawings and as specified herein.

1.2 Submit Manufacturer's data on the following:

1.2.1 Conduit.

1.2.2 Fittings

1.2.3 Fire stopping Material.

1.2.4 Surface Raceways.

1.2.5 Type MC or MC-PCS cable, provide construction details and UL "E" number.

1.3 **Common submittal mistakes which will result in the submittals being rejected:**

1.3.1 Not including all items listed in the above itemized description.

1.3.2 Including catalog cut sheets which have several items on a page, and not clearly identifying by highlighting, underlining or clouding the items to be reviewed, or crossing out the items which are not applicable.

1.3.3 Not including actual manufacturer's catalog information of proposed products.

1.3.4 Do not include multiple manufacturers for similar products and do not indicate "or approved equal" statements, or "to be determined later" statements. The products being submitted must be the products installed.

PART 2 – PRODUCTS

2.1 Rigid steel conduit, intermediate metal conduit (IMC), electrical metallic tubing (EMT) and flexible metallic conduit shall be steel, hot dipped galvanized after fabrication.

2.2 PVC conduit shall be Carlon or approved equal.

2.3 Liquid tight flexible metal conduit shall be Anaconda Sealtite type UA or approved equal. Fittings shall be Appleton, Crouse-Hinds, Steel City, T&B, or equivalent.

2.4 MC type armored cable, when utilized, shall be provided with the following:

2.4.1 Comply with UL 1479 and CEC 330

2.4.2 90ºC, copper, THHN conductors.

2.4.3 Minimum #12 insulated grounding conductor.

2.4.4 Conductors sized No. 10 and smaller shall be solid, No. 8 and larger shall be stranded.

2.4.5 Oversized (150%) neutrals or separate neutrals shall be provided.

2.4.6 Increase phase conductors to No. 10 AWG for 120 volt circuits greater than 100 feet from panel to load and for 277 volt circuits greater than 200 feet from panel to load. Where required increase conductor sizes for entire length of circuit.

2.4.7 Interlocked armored **aluminum** sheath.

2.4.8 AC or BX type armored cable shall **not** be substituted in lieu of MC type cable.

2.4.9 Color code cable according to cable type and configuration.

2.4.10 Acceptable manufacturers are AFC and Alflex.

2.5 MC-PCS luminary armored cable , when utilized, shall be provided with the following:

2.5.1 Comply with UL 1479 and CEC 330

2.5.2 90ºC, copper, THHN conductors.

2.5.3 Minimum #12 insulated grounding conductor.

2.5.4 Lighting phase conductors sized No. 10 and smaller shall be solid, lighting control conductors shall be sized no. 16 solid.

2.5.5 Interlocked armored **aluminum** sheath.

2.5.6 AC or BX type armored cable shall **not** be substituted in lieu of MC type cable.

2.5.7 Color code phase cable according to cable type and configuration. color code control conductors purple/gray.

2.5.8 Acceptable manufacturers are AFC and Alflex.

2.6 Fire stopping material shall provide an effective seal against fire, heat, smoke and fire gases. Fire stopping material shall be tested to comply with ASTME 814 and UL 1479. The submittal for this product shall include the UL listed system number and installation requirements for each type of penetration seal required for this project.

2.7 Each length of conduit shall be stamped with the name or trademark of the manufacturer and shall bear the UL label.

2.8 All plastic conduit shall be rigid, schedule 40, heavy wall PVC. All PVC conduit shall be UL listed. Underground utility company conduits shall comply with local utility co. requirements.

2.9 Plastic conduit shall be stored on a flat surface, and protected from the direct rays of the sun.

2.10 Where branch circuit or communication raceways cannot be concealed in ceilings or walls and are required to be exposed in interior spaces, provide nonmetallic surface raceway system sized per the manufacturer capacity requirements. A full complement of nonmetallic fittings must be available and matching device boxes and cover plates must be provided. The color of the raceway system, components and boxes shall be (white). Where data networking cabling is to be installed, all raceway fittings shall meet Category 5 radius requirements. Where specific raceway types have been noted on the drawings they shall be as follows:

2.10.1 System 'SR'	Hubbell	WALLTRAK 1 series
	Wiremold	ECLIPSE PN05series
	Panduit	LD5 series
	Hellerman-Tyton	TSR2 series
2.10.2 System 'SR2'	Hubbell	WALTRAK 22
	Wiremold	2300D Series
	Panduit	D2P10
	Hellerman-Tyton	TSR3 series
2.10.3 System 'SR3'	Hubbell	BASETRAK series
	Wiremold	5400 - series
	Panduit	70 series
	Hellerman-Tyton	MCR Infostream" series

Provide with offset boxes, inline boxes may only be used where specifically shown on the drawings.

PART 3 – FITTINGS

3.1 All metallic fittings, including those for EMT, flexible conduit, or malleable iron. Die cast fittings of any other material are not permitted.

3.2 Locknuts shall be steel or malleable iron with sharp clean cut threads.

3.3 Entrance seals shall be 0.Z. type FSK or equivalent.

3.4 Bushings and locknuts: Where conduits enter boxes, panels, cabinets, etc., they shall be rigidly clamped to the box by locknuts on the outside, and a lock nut and plastic bushing on the inside of the box. All conduits shall enter the box squarely.

3.5 Furnish and install insulated bushings as per CEC article No. 300 - 4 (F) on all conduits. The use of insulated bushings does not exclude the use of double locknuts to fasten conduit to the box.

3.6 Transition from plastic to steel conduits shall be with PVC female threaded adaptors.

3.7 Couplings and connectors for rigid steel or IMC conduit must be threaded, or compression type (set screw fittings are not permitted).

3.8 Couplings and connectors for EMT shall be compression, watertight. Set screw connectors are not acceptable, except for systems below 120 volts.

3.9 MC or MC-PCS type armored cable shall be provided with listed clamp type die cast zinc set screw connectors. Anti-short bushings shall be provided at all cable ends.

3.10 Connectors for flexible metal conduit shall be steel or malleable iron with screw provided to clinch the conduit into the adapter body. For sizes up to ¾'' a screw-in, "Jake type," fitting may be used.

3.11 Install approved expansion fittings, or liquid tight flex conduit with a minimum 6" slack for conduits passing through all expansion and seismic joints.

PART 4 - EXECUTION

4.1 All branch circuits shall be installed concealed in walls or above ceilings or in concrete floor slabs. PVC conduits installed in concrete floor slabs shall transition to PVC coated rigid steel where conduits penetrate above finished grade or finished floor.

4.2 Conduit sizes for various numbers and sizes of wire shall be as required by the CEC, but not smaller than ½" for power wiring and ¾" for communications and fire alarm systems unless otherwise noted. Conduit in slab or below grade shall be ¾" minimum trade size, unless otherwise identified.

4.3 Conduit size shall be such that the required number and sizes of wires can be easily pulled in and the Contractor shall be responsible for the selection of the conduit sizes to facilitate the ease of pulling. Conduit sizes shown on the drawings are minimum sizes in accordance with appropriate tables in the CEC. If because of bends or elbows a larger conduit size is required, the Contractor shall so furnish without further cost to the Owner.

4.4 The Contractor shall be entirely responsible for the proper protection of this work from the other trades on the job. When conduit becomes bent or holes are punched through same, or outlets moved after being roughed-in, the Contractor shall replace same, without additional cost to the Owner.

4.5 Rigid steel conduit or IMC shall be used as follows:

4.5.1 Exposed exterior locations.

4.5.2 Exposed interior locations below eight feet above floor, except in electrical rooms and closets.

4.5.3 In hazardous or classified areas as required by CEC.

4.6 EMT conduit shall be used for areas as follows:

4.6.1 All interior communications, signal, and data networking systems.

4.6.2 All interior power wiring systems where not required to be in rigid steel, IMC or flexible conduit.

4.7 Flexible conduit shall be used for areas as follows:

4.7.1 To connect motors, transformers, and other equipment subjected to vibration or where specifically detailed on the drawings.

4.7.2 Flexible conduit shall not be used to replace EMT in other locations where the conduit will be exposed.

4.7.3 Flexible metal conduit shall be ferrous. Installation shall be such that considerable slack is realized. The conduit shall contain separate code sized grounding conductor.

4.7.4 Liquid tight flexible conduit shall be used in conformance with CEC in lengths not to exceed 4'. For equipment connections, route the conduit at 90 degrees to the adjacent path for point of connection. The conduit shall contain separate code sized grounding conductor. Use liquid tight flexible conduit for all

equipment connections exposed in possible wet, corrosive or oil contaminated areas, e.g., shops and outside areas.

4.8 MC armored cable may be used as follows:

4.8.1 All branch circuit wiring for lighting and power circuits where permitted and installed in compliance with UL 1569 and CEC 330.

4.9 MC-PCS luminary armored cable may be used as follows:

4.9.1 All Lighting branch circuit wiring for lighting circuits where permitted and installed in compliance with UL 1569 and CEC 300-22(c), 330. This cable permits conductors of control circuits to be placed in a cable with lighting power circuits or class 1 circuits.

4.9.2 It shall not be considered an acceptable option to install lighting control class 1 circuits as an open wire installation.

4.10 MC and MC-PCS armored cable shall **not** be used for the following areas:

4.10.1 Any exterior, underground or buried in concrete circuits.

4.10.2 Any circuits feeding HVAC equipment or pumps or any circuit with 30 AMPs or greater overcurrent protection.

4.10.3 Any exposed interior locations except in electrical, communication or mechanical equipment rooms.

4.10.4 Any exposed interior damp/wet locations, kitchens, science classrooms, shop areas, or concealed in science classroom casework, unless provided with approved PVC jacket.

4.10.5 Any hazardous rated area.

4.11 Plastic conduit shall be used for all exterior underground, in slab, and below slab on grade conduit installations. Install bell ends at all conduit terminations in manholes and pull boxes. Where plastic conduit transitions from below grade to above grade, no plastic conduit shall extend above finished exterior grade, or above interior finished floor level.

4.12 Plastic conduit joints shall be made up in accordance with the manufacturer's recommendations for the particular conduit and coupling selected. Conduit joint couplings shall be made watertight. Plastic conduit joints shall be made up by brushing a plastic solvent cement on the inside of a plastic fitting and on the outside of the

conduit ends. The conduit and fitting shall then be slipped together with a quick one-quarter turn twist to set the joint tightly.

4.13 All underground conduit depths shall be as detailed on the drawings or a minimum of 30" below finished grade (when not specifically detailed otherwise), for all exterior underground conduits. Where concrete slurry or concrete encasement is provided, include “Red” color dye in mixture.

4.14 All underground conduits for power systems (600v and higher), shall be concrete encased and a minimum of 48” below grade or as detailed on the drawings. Where concrete slurry or concrete encasement is provided, include “Red” color dye in mixture.

4.15 Conduit shall be continuous from outlet to outlet, cabinet or junction box, and shall be so arranged that wire may be pulled in with the minimum practical number of junction boxes.

4.16 All conduits shall be concealed wherever possible. All conduit runs may be exposed in mechanical equipment rooms, electrical equipment rooms, electrical closets, and in existing or unfinished spaces. No conduit shall be run exposed in finished areas without the specific approval of the Architect.

4.17 All raceways which are not buried or embedded in concrete shall be supported by straps, clamps, or hangers to provide a rigid installation. Exposed conduit shall be run in straight lines at right angles to or parallel with walls, beams, or columns. In no case shall conduit be supported or fastened to other pipes or installed to prevent the ready removal of other trades piping. Wire shall not be used to support conduit.

4.18 It shall be the responsibility of the Contractor to consult the other trades before installing conduit and boxes. Any conflict between the location of conduit and boxes, piping, duct work, or structural steel supports, shall be adjusted before installation. In general, large pipe mains, waste, drain, and steam lines shall be given priority.

4.19 Conduits above lay-in grid type ceilings shall be installed in such a manner that they do not interfere with the "lift-out" feature of the ceiling system. Conduit runs shall be installed to maintain the following minimum spacing wherever practical.

4.19.1 Water and waste piping not less than 3".

4.19.2 Steam and steam condensate lines not less than 12".

4.19.3 Radiation and reheat lines not less than 6".

4.20 Provide all necessary sleeves and chases required where conduits pass through floors or walls as part of the work of this section. Core drilling will only be permitted where approved by the Architect.

4.21 All empty conduits and surface mounted raceways shall be provided with a ¼" polypropylene plastic pull cord and threaded plastic or metal plugs over the ends. Fasten plastic "Dymo" tape label to exposed spare conduit to identify "power" or "communication" system, and to where it goes.

4.22 The ends of all conduits shall be securely plugged, and all boxes temporarily covered to prevent foreign material from entering the conduits during construction. All conduit shall be thoroughly swabbed out with a dry swab to remove moisture and debris before conductors are drawn into place.

4.23 Bending: Changes in direction shall be made by bends in the conduit. These shall be made smooth and even without flattening the pipe or flaking the finish. Bends shall be of as long a radius as possible, and in no case smaller than CEC requirements.

4.23.1 For power conduits for conductors (600v and below), provide minimum 36" radius (vertical) and 72" radius (horizontal) bends.

4.23.2 For power conduits for conductors (greater than 600v), provide minimum 72" radius (vertical) and 72" radius (horizontal) bends.

4.24 Supports: Conduit shall be supported at intervals as required by the California Electrical Code. Where conduits are run individually, they shall be supported by approved conduit straps or beam clamps. Straps shall be secured by means of toggle bolts on hollow masonry, machine screws or bolts on metal surfaces, and wood screws on wood construction. No perforated straps or wire hangers of any kind will be permitted. Where individual conduits are routed, or above ceilings, they shall be supported by hanger rods and hangers. Conduits installed exposed in damp locations shall be provided with clamp backs under each conduit clamp, to prevent accumulation of moisture around the conduits.

4.25 Where a number of conduits are to be run exposed and parallel, one with another, they shall be grouped and supported by trapeze hangers. Hanger rods shall be fastened to structural steel members with suitable beam clamps or to concrete inserts set flush with surface. A reinforced rod shall be installed through the opening provided in the concrete inserts. Beam clamps shall be suitable for structural members and conditions. Rods shall be galvanized steel 3/8" diameter minimum. Each conduit shall be clamped to the trapeze hanger with conduit clamps.

4.26 All concrete inserts and pipe clamps shall be galvanized. All steel bolts, nuts, washers, and screws shall be galvanized or cadmium plated. Individual hangers, trapeze hangers and rods shall be prime-coated.

4.27 Openings through fire rated floors/walls and/or smoke walls through which conduits pass shall be sealed by Fire stopping material to comply with Division 1 to seal off flame,

heat, smoke and fire gases. Sleeves shall be provided for power or communication system cables which are not installed in conduits, and shall be sealed inside and out to comply with manufacturers UL system design details. Where multiple conduits and/or cable tray systems pass thru fire-rated walls at one location, the Contractor shall submit copies of the manufacturers UL system design details proposed for use on this project. All Fire stopping material shall have an hourly fire-rating equal to or higher than the fire rating of the floor or wall through which the conduit, cables, or cable trays pass.

4.28 Provide cap or other sealing type fitting on all spare conduits. Conduits stubbed into buildings from underground where cable only extends to equipment, the conduit/cable end shall be sealed to prevent moisture from entering the room or space.

4.29 All conduits which are part of a paralleled feeder or branch circuit shall be installed underground.

4.30 All conduits which are required as a part of systems specified in Divisions 27 or 28, or any other low voltage communication systems, shall be furnished and installed by the Division 26 Contractor.

4.30.1 The Contractor shall coordinate all conduit requirements with each system supplier prior to bid to determine special conduit system requirements.

4.30.2 The Contractor shall provide a pull rope in all conduits for these systems.

4.30.3 The Contractor shall provide conduit sleeves for all open cable installations thru rated walls or block walls. Provide conduit from each building main termination cabinet or backboard to the nearest accessible ceiling for access into all electrical or communications rooms.

4.31 In addition to the above requirements, the following requirements shall apply to all data networking conduits:

4.31.1 Flexible metal conduit may only be used where required at building seismic and/or expansion joints.

4.31.2 All underground conduits shall be provided with minimum 24" radius elbows (vertical) and 60” (horizontal).

4.31.3 No length of conduit above grade shall be installed to exceed 150 feet between pull boxes, or points of connection, unless where specifically detailed on the drawings.

4.31.4 No length of conduit shall be installed to exceed two 90 degree bends between pull boxes, or points of connection, unless where specifically detailed on the drawings.

4.32 Where surface raceways are installed in interior spaces, the Contractor shall take care to route in straight lines at right angles to or parallel with walls, beams, or columns. All raceways and device boxes shall be securely screwed to the finish surface with zinc screw "Auger" anchors Stk #ZSA1K by Gray Bar Electric or equal. Tape adhesive application will not be permitted.

4.33 The Contractor who installs surface raceway systems shall provide and install complete with wire retention clips, one for every (8) vertical feet or (5) horizontal feet or portion thereof. This Contractor shall also provide each raceway channel with pull strings.

4.34 It shall be the responsibility of the Contractor installing the raceway to coordinate the installation of raceway device plates and inserts with the communications or data contractors.

4.35 MC or MC-PCS cable shall be cut using a specific metallic sheath armor stripping tool. The use of hacksaws, dikes or any other tools not specifically designed to remove the armor sheath will not be permitted.

4.36 MC or MC-PCS cables installed in attic spaces or above lay-in ceilings shall be installed to be protected from physical damage. The cable shall be mounted along the sides or bottom of joists, rafters or studs.

4.37 Support wires used for supporting ceilings, lighting fixtures or other equipment items shall **not** be used to support MC or MC-PCS cables. Conduits, duct work, piping or any other equipment shall not be used to support or mount MC cables.

4.38 MC or MC-PCS cable supports, fasteners and clips shall be designed specifically for use with MC cables. Standard conduit supports, fasteners and clips, nails or other items are not permitted for installing MC cables.

END OF SECTION

SECTION 26 05 34
OUTLET AND JUNCTION BOXES

PART 1 – GENERAL

1.1 Furnish and install electrical wiring boxes as specified and as shown on the electrical drawings.

1.2 Submit manufacturer's data for all items.

1.3 <u>Common submittal mistakes which will result in the submittals being rejected:</u>

1.3.1 Not including all items listed in the above itemized description.

1.3.2 Including catalog cut sheets which have several items on a page, and not clearly identifying by highlighting, underlining or clouding the items to be reviewed, or crossing out the items which are not applicable.

1.3.3 Not including actual manufacturer's catalog information of proposed products.

1.3.4 Do not include multiple manufacturers for similar products and do not indicate "or approved equal" statements, or "to be determined later" statements. The products being submitted must be the products installed.

PART 2 – PRODUCTS

2.1 Boxes shall be as manufactured by Steel City, Appleton, Raco, or approved equal.

2.2 All boxes must conform to the provisions of Article 370 of the CEC. All boxes shall be of the proper size to accommodate the quantity of conductors enclosed in the box. Minimum box size shall be 4" square x 1-½" deep.

2.3 Boxes generally shall be hot dipped galvanized steel with knockouts. Boxes on exterior surfaces or in damp locations shall be corrosion resistant, cast feraloy and shall have threaded hubs for rigid conduit and neoprene gaskets for their covers. Boxes shall be Appleton Type FS, Crouse-Hinds, or the approved equal. Conduit bodies shall be corrosion resistant, cast malleable iron. Conduit bodies shall have threaded hubs for rigid conduit and neoprene gaskets for their covers. Conduit bodies shall be Appleton Unilets, Crouse-Hinds, or the approved equal. Where recessed, boxes shall have square cut corners.

2.4 Deep boxes shall be used in wall covered by wainscot or paneling and in walls or glazed tile, brick, or other masonry which will not be covered with plaster. Through the wall type boxes shall not be used unless specifically called for. All boxes shall be nongangable. Boxes in concrete shall be of a type to allow the placing of conduit

without displacing the reinforcing bars. All lighting fixture outlet boxes shall be equipped with the proper fittings to support and attach a light fixture.

2.5 All light, switch, receptacle, fire alarm devices and similar outlets shall be provided with approved boxes, suitable for their function. Back boxes shall be furnished and installed as required for the equipment and/or systems under this contract.

2.6 Pull and junction boxes shall be code gauge boxes with screw covers. Boxes shall be rigid under torsional and deflecting forces and shall be provided with angle from framing where required. Boxes shall be 4" square with a blank cover in unfinished areas and with a plaster ring and blank cover in finished areas. Covers for flush mounted oversize boxes shall extend ¾" past boxes all around. Covers for 4" square boxes shall extend ¼" past box all around.

2.7 All terminal cabinets and junction boxes or equipment back boxes which are required as a part of systems specified in Divisions 27 or 28, or any other low voltage communication systems, shall be furnished and installed by the Division 26 Contractor.

2.7.1 The Division 26 Contractor shall coordinate all box requirements with each system supplier prior to bid to determine special cabinet or back box requirements. The Contractor shall also provide stainless steel blank cover plates for all low voltage systems installed for future equipment.

2.7.2 The Contractor shall provide all plywood backboards indicated on walls or inside equipment enclosures. All backboards shall be a minimum of ¾" thick fire rated type plywood.

2.7.3 The Contractor shall coordinate exact rough in locations and requirements with each system supplier.

2.8 In addition to the above requirements, boxes for data networking wiring and equipment shall comply with the following:

2.8.1 All boxes shall be a minimum of 4-11/16" square x 2-1/8" deep.

2.8.2 Where pull boxes are required on individual conduits 1-¼" or smaller, provide 4-11/16" square x 2-1/8" deep boxes. Where pull boxes are required on conduits larger than 1-¼" for straight pull through, provide eight times the conduit trade size for box length. Where pull boxes are required on conduits larger than 1-¼" for an angle or a U-pull through installation, provide a minimum distance of six times the conduit trade size between the entering and exiting conduit run for each cable.

2.9 Recessed boxes installed in fire rated floors/walls and /or smoke walls shall be sealed by Fire stopping material to comply with Division 1 to seal off flame, heat, smoke and fire

gases. The Contractor shall submit copies of the manufacturers UL system design details proposed for use on this project. All Fire stopping material shall have an hourly fire-rating equal to or higher than the fire rating of the floor or wall through which the conduit, cables, or cable trays pass.

PART 3 – EXECUTION

3.1 Boxes shall be installed where required to pull cable or wire, but in finished areas only by approval of the Architect. Boxes shall be rigidly attached to the structure, independent of any conduit support. Boxes shall have their covers accessible. Covers shall be fastened to boxes with machine screws to ensure continuous contact all around. Covers for surface mounted boxes shall line up evenly with the edges of the boxes.

3.2 Outlets are only approximately located on the plans and great care must be used in the actual location of the outlets by consulting the various detailed drawings and specifications. Outlets shall be flush with finished wall or ceiling, boxes installed symmetrically on such trim or fixture. Refer to drawings for location and orientation of all outlet boxes.

3.3 Furnish and install all plaster rings as may be required. Plaster rings shall be installed on all boxes where the boxes are recessed. Plaster rings shall be of a depth to reach the finished surface. Where required, extension rings shall be installed so that the plaster ring is flush with the finished surface.

3.4 All cabinets and boxes shall be secured by means of toggle bolts on hollow masonry; expansion shields and machine screws or standard precast inserts on concrete or solid masonry; machine screws or bolts on metal surfaces and wood screws on wood construction. All wall and ceiling mounted outlet boxes shall be supported by bar supports extending from the studs or channels on either side of the box. Boxes mounted on drywall or plaster shall be secured to wall studs or adequate internal structure.

3.5 Boxes with unused punched-out openings shall have the openings filled with factory-made knockout seals.

3.6 Where standby power and normal power are to be located in the same outlet box or 480V in a switch box, install partition barriers to separate the various systems.

3.7 All device boxes and junction boxes for fire alarm system shall be painted red and shall be 4-11/16” square by 2-1/8” deep. No exceptions.

END OF SECTION

SECTION 26 24 16
PANELBOARDS

PART 1 – GENERAL

1.1 Furnish and install branch circuit panel boards as specified herein and as indicated on the drawings. Submit manufacturers' data on all items.

1.2 Submit manufacturers' data on all panel boards and components including:

1.2.1 Enclosures and covers

1.2.2 Breakers

1.2.3 Surge Protective Device (SPD) equipment

1.2.4 Incident energy level calculations

1.2.5 Common submittal mistakes which will result in the submittals being rejected:

1.2.5.1 Not arranging the circuit breakers in panels to match the orientations indicated on the drawings. In other words, if a 30 amp breaker is shown on the drawing in Space #2, this must be the location it appears on the submittal schedule. Standard factory arrangements will not be accepted.

1.2.5.2 Not including all items listed in the above itemized description.

1.2.5.3 Including catalog cut sheets which have several items on a page, and not clearly identifying by highlighting, underlining or clouding the items to be reviewed, or crossing out the items which are not applicable.

1.2.5.4 Not including actual manufacturer's catalog information of proposed products.

1.2.5.5 Do not include multiple manufacturers for similar products and do not indicate "or approved equal" statements or "to be determined later" statements. The products being submitted must be the products installed.

PART 2 – PRODUCTS

2.1 The interrupting rating of circuit breakers shall be 10,000 amps for the 120/208 system and 14,000 amp for 277/480 volt systems. Refer to drawings for higher interrupting

rating requirements. All components and equipment enclosures shall be manufactured by the same manufacturer. Circuit breakers shall be permitted to be series rated to limit the available fault current to no more than the above ratings.

2.2 All panels shall be fully bussed. Recessed panel enclosures shall be a maximum of 20" wide and 5-3/4" deep for all panels 600 amp rated and less.

2.3 All busses shall be tin-plated aluminum and shall be located in the rear of the panelboard cabinet. Individual circuit breakers shall be bolt on type and removable from the cabinet without disturbing the bussing in any way. All panel boards shall contain ground busses.

2.4 Panel covers shall be door in door style, with one lock. Door lock shall allow access to breakers only. Access to wireways without removal of cover shall be permitted by (non removable) screws behind the locked door. Panel cover shall be provided with full length piano hinge. All locks for all panels provided in this project shall be keyed alike.

2.5 Each panel shall have a two-column circuit index card set under glass or glass equivalent on the inside of the door. Each circuit shall be identified as to use and room or area. Areas shall be designated by room numbers. Room numbers shown on the drawings may change and contractor shall verify final room numbers with the architect prior to project completion.

2.6 Tandem mounted or wafer type breakers are not acceptable.

2.7 Multi-pole breakers shall have one common trip handle or be internally connected. Handle ties are not acceptable.

2.8 Circuit breakers for a multi-wire branch circuit shall be tied together with a factory breaker handle tie.

2.9 Breaker arrangements shown in the drawings shall be maintained. The circuit breakers in panels must match the orientations indicated on the drawings. In other words, if a 30 amp breaker is shown on the drawing in Space #2, this must be the location it appears on the submittal schedule. Standard factory arrangements will not be accepted.

2.10 Where conductor sizes exceed the standard breaker lug wire range, or where multiple conductors per phase are required, the panelboard manufacturer shall provide the breaker with suitable lugs for terminating the specified conductors.

2.11 Acceptable manufacturers are Square D, Eaton, Siemens or General Electric.

2.12 Equipment manufactured by any other manufacturers not specifically listed in Section 2.10 are <u>not</u> considered equal, or approved for use on this project.

Surge Protective Devise (SPD)

2.13 Surge Protective Device (SPD) panelboards, shall be provided with an integrated circuit breaker panelboard and parallel connected suppression / filter system in a single enclosure. The SPD panelboard shall meet the following parameters: IEEE C62.41.1, IEEE C62.41.2, IEEE C62.45, UL 1283 and the UL 1449, Third Edition, effective September 29, 2009.

2.14 The panelboard shall be UL 67 Listed and the SPD shall be UL 1449 labeled as Type 1 or Type 2 or as Type 4 intended for Type 1 or Type 2 applications. SPD shall be factory installed integral to the panel board.

2.15 The SPD panelboard shall be top or bottom feed according to requirements. A circuit directory shall be located inside the door.

2.16 SPD shall meet or exceed the following criteria:

2.16.1 For standard areas supply SPD having 100kA per phase surge current capacity. For mountain and desert areas (areas with over 5 lightning strikes per year), SPD shall have a per phase surge current capacity of 200kA.

2.16.2 UL 1449 – Third Edition Revision; effective September 29, 2009, Voltage Protection Ratings shall not exceed the following:

VOLTAGE	L-N	L-G	N-G	L-L	MCOV
208Y/120	700V	700V	700V	1200V	150V
480Y/277	1200V	1200V	1200V	2000V	320V

2.16.3 SPD shall be UL labeled with 100kA Short Circuit Current Rating (SCCR).

2.17 UL 1449 - Third Edition Revision; effective September 29, 2009, Voltage Protection Ratings shall not exceed the following:

VOLTAGE	L-N	L-G	N-G	L-L	MCOV
208Y/120	700V	700V	700V	1200V	150V
480Y/277	1200V	1200V	1200V	2000V	320V

2.18 SPD shall be UL labeled with a minimum 100kVA short circuit rated (SCCR).

2.19 UL 1449 Listed Maximum Continuous Operating Voltage (MCOV) (verifiable at UL.com):

System Voltage	Allowable System Voltage Fluctuation (%)	MCOV
208Y/120	25%	150V
480Y/277	15%	320V

2.20 SPD shall incorporate a UL 1283 listed EMI/RFI filter with minimum attenuation of -50dB at 100 kHz. No filtering is required for a 100kA SPD.

2.21 Suppression components shall be heavy duty 'large block' MOVs, each exceeding 30mm diameter.

2.22 Type 4 SPD shall include a serviceable, replaceable module.

2.23 SPD shall be equipped with the following diagnostics:

2.23.1 Visual LED diagnostics including a minimum of one green LED indicator per phase, and one red service LED.

2.23.2 No other test equipment shall be required for SPD monitoring or testing before or after installation.

2.24 SPD shall have a response time no greater than 1/2 nanosecond

2.25 SPD shall have a 10 year warranty

2.26 The SPD panelboard shall have removable interior

2.27 The SPD panelboard main bus shall be aluminum and rated for the load current required

2.28 The SPD panelboard shall include a 200% rated neutral assembly with copper neutral bus

2.29 The unit shall be provided with a safety ground bus

(SPD) Quality Assurance

2.30 Manufacturer Qualifications: Engage a firm with at least 5 years experience in manufacturing transient voltage surge suppressors.

2.31 Manufacturer shall be ISO 9001 or 9002 certified.

2.32 The manufacturer of this equipment shall have produced similar electrical equipment for a minimum period of ten (10) years. When requested by the Engineer, an acceptable list of installations with similar equipment shall be provided demonstrating compliance with this requirement.

2.33 The SPD shall be compliant with the Restriction of Hazardous Substances (RoHS) Directive 2002/95/EC.

PART 3 – **EXECUTION**

3.1 Painting of panelboard covers in finished areas shall be done by the general contractor.

3.2 Provide a spare 3/4" conduit stubbed to an accessible area for each of every three (3) spares or spaces provided in recessed panel boards.

3.3 All lugs shall be torque tested in the presence of the inspector of record.

Short Circuit & Coordination Study

3.4 The contractor shall provide the following studies; a time current and complete short-circuit study, equipment-interrupting or withstand evaluation, and a protective-device coordination study as described below for the distribution system. The equipment study shall be included with the equipment submittals. The studies shall include all portions of the electrical distribution system from the normal and alternate sources of power throughout the low-voltage distribution system. Normal system operating method, alternate operation, and operations which could result in maximum-fault conditions shall be thoroughly covered in the study. The studies are to be reviewed by a Professional Engineer registered in the State of California.

3.4.1 **All studies shall be performed by "Emerson Electric" (858) 695-9551, MTA (858) 472-0193, or Terra Power Solutions (858) 380-8170. Studies performed by manufactures or other engineering or testing companies must submit qualifications for approval by Johnson Consulting Engineers, 7 days prior to bid for this project**.

3.5 Short-Circuit Study

3.5.1 The study shall be in accordance with applicable ANSI and IEEE standards.

3.5.2 The study input data shall include the short-circuit single- and three-phase contributions from all sources, with the X/R ratio, the resistance and reactance components of each branch impedance, motor and generator contributions, base quantities selected, and all other applicable circuit parameters.

3.5.3 Short-circuit momentary duties and interrupting duties shall be calculated on the basis of maximum available fault current at each switchgear bus, switchboard, motor control center, distribution panelboard, pertinent branch circuit panelboards, and other significant locations through the system.

3.5.4 For the portions of a system utilizing medium- and high-voltage breakers, separate calculations shall be made for one-half cycle (close and latch) currents and interrupting currents. Calculations shall be for three-phase and phase-to-ground faults at each bus under consideration.

3.5.5 For the portions of a system utilizing low-voltage breakers (less than 1,000 volts), calculations shall be made for three-phase and phase-to-ground interrupting currents at each bus under consideration.

3.6 Equipment Evaluation Study

3.6.1 An equipment evaluation study shall be performed to assure the adequacy of circuit breakers, controllers, surge arresters, busways, switches, and fuses by tabulating and comparing the short-circuit ratings of these devices with the maximum short-circuit momentary and interrupting duties. Series rating of over current protective devices shall be permitted to reduce the maximum available short circuit current to panelboard branch circuit breakers to no more than 10,000 amps symmetrical for the 120/208 volt system and 14,000 amps symmetrical for the 277/480 volt system.

3.7 Protective-Device Coordination Study

3.7.1 A protective-device coordination study shall be performed to select or to verify the selection of power fuse ratings, protective-relay characteristics and settings, ratios, and characteristics of associated voltage and current transformers, and low-voltage breaker trip characteristics and settings. Time current curves are to be colored to clearly indicate coordination.

3.7.2 The coordination study shall include all voltage classes of equipment from the source's incoming line protective device down to and including each motor control center and/or panelboard. The phase and ground over current protection shall be included as well as settings for all other adjustable protective devices. Ground fault settings are to, as a minimum coordinate with a downstream 50 amp branch circuit breaker.

3.7.3 Protective device selection and settings shall be in accordance with requirements of the National Electrical Code and the recommendations of the ANSI/IEEE Standard 399, as applicable.

3.8 Study Report

3.8.1 The results of the power-system studies shall be summarized in a final report. The report shall include the following sections:

3.8.1.1 Description, purpose, basis, and scope of the study and a single-line diagram of the portion of the power system which is included within the scope of study.

3.8.1.2 Tabulations of circuit breaker, fuse, and other equipment ratings versus calculated short-circuit duties and commentary regarding same.

3.8.1.3 Protective device coordination curves, with commentary.

3.8.1.4 The selection and settings of the protective devices shall be provided separately in a tabulated form listing circuit identification, IEEE device number, current transformer ratios, manufacturer, type, range of

adjustment, and recommended settings. A tabulation of the recommended power fuse selection shall be provided for all fuses in the system.

3.8.1.5 Fault-current tabulations including a definition of terms and a guide for interpretation.

3.8.1.6 The report must be submitted with the material submittal for the engineer's approval.

3.9 Implementation

3.9.1 The contractor shall be responsible for providing over current devices which are in compliance with the results of the above study.

3.10 A warning label, as specified in the above standard, shall be placed on each switchboard, panelboard, and safety switch indicating the incident energy levels on the equipment to warn qualified personnel in accordance with NFPA 70E, section 110.16. Labels shall be laminated white micarta with black lettering on each. Letters shall be no less than 3/8" high.

3.11 The incident level calculations for each piece of equipment shall be given to the owner and maintained on file by the maintenance department.

3.12 The design goal is to minimize the incident energy to which a maintenance employee may be exposed.

END OF SECTION

SECTION 26 27 26
SWITCHES AND RECEPTACLES

PART 1 – GENERAL

1.1 Furnish and install all wiring devices as shown on drawings and as herein specified. Unless otherwise noted, device and plate numbers shown are Hubbell and shall be considered the minimum standard acceptable. Other acceptable manufacturers are Pass and Seymour, Leviton, General Electric and Bryant.

1.2 Submit manufacturers' data on all items.

1.3 **Common submittal mistakes which will result in the submittals being rejected:**

1.3.1 Not correctly indicating ampacity rating of proposed devices.

1.3.2 Not including all items listed in the above itemized description.

1.3.3 Including catalog cut sheets which have several items on a page, and not clearly identifying by highlighting, underlining or clouding the items to be reviewed, or crossing out the items which are not applicable.

1.3.4 Not including actual manufacturer's catalog information of proposed products.

1.3.5 Do not include multiple manufacturers for similar products and do not indicate "or approved equal" statements or "to be determined later" statements. The products being submitted must be the products installed.

PART 2 – PRODUCTS

2.1 All switches shall be of the quiet mechanical type, Specification Grade, 20 amp, 120/277 volt AC as follows:

	HUBBELL	LEVITON	PASS & SEYMOUR
Single Pole	CS120	CS1202	CS20AC1
Two Pole	CS1222	CS2202	CSB20AC2
Three-way	CS320	CS3202	CS20AC3
Key Switch	HBL1221	L1221-2L	PS20AC1-L

2.2 All switches shall have the "on" and the "off" position indicated on the handle. If switches of higher ampere ratings are required, they shall be of similar type and quality as those shown above. Groups of switches shown at one location shall be installed under a single plate up to a maximum of six where more than six switches are shown coordinate arrangement with the Architect.

2.3 Dimmer switches for incandescent lamp loads shall be square-law type, slide control dimmer with OFF position, Lutron or Hubbell "Nova-T" Series NT-600 (0-500 watt load), NT-1000 (501-900 watt load), NT-1500 (901-1500 watt load), or equal (no known equal).

2.4 All convenience receptacles and special outlets throughout shall be grounding type oriented with ground side up. Convenience receptacles shall be side wired, parallel slot, two pole, three wire, 20 amp as follows:

	HUBBELL	LEVITON	PASS & SEYMOUR
Duplex	5352	5362	PS5362
GFCI	GFR5362	7899	2097
Isolated Ground	IG5362	5362IG	IG6300
Tamper Proof		8300SG	TR63H

2.5 All safety or tamper proof receptacles shall have no exposed external current carrying metal parts, and shall have integral wiring leads suitable for two or three wire installations.

2.6 Special receptacles shall be as noted on the drawings.

2.7 Weatherproof plates shall be designed to meet CEC Article 410-57, wet location listed with cover "open." Where weatherproof receptacles have been identified to be provided with locking covers, the cover shall be as manufactured by Pass & Seymour #4600-8 or Cole Lighting 310 Series. Rough-in requirements vary between manufacturers. Contractor to field verify requirements prior to installation.

2.8 All plates throughout shall be stainless steel. Where wiring devices are installed in concrete block walls, provide oversized 3-1/2" x 5" cover plates.

2.9 All devices shall be white unless otherwise noted or a special purpose outlet.

2.10 Unless where specifically detailed on the drawings, floor boxes shall be PVC suitable for concrete poured floors of minimum 3-1/2" depth, with a modular design to gang two or three sections together.

2.10.1 Carlon #E976 series or approved equal

2.10.2 Provide brass cover with brass carpet flange unless otherwise detailed.

PART 3 – EXECUTION

3.1 All receptacles and line voltage switches shall be labeled on faceplate utilizing white Dymo-Tape with black lettering. Labeling format shall be 'XX-YY'. XX represents panel name and YY represents circuit number. Labels shall be placed below the top faceplate fastener and above the top edge of faceplate opening. In no circumstance shall they overlap the fastener or the receptacle.

3.2 Switches for room lighting shall be located no more than 12" center line from door jamb at plus 48" center line above finished floor or +46" to top of devices where located over casework, reference CBC Figure 11B-5D.

3.3 All receptacles shall be mounted at plus 18" to center line above finished floor unless noted or shown otherwise. All receptacles shall be installed with the ground pin up, at the top of the receptacle to comply with IEEE 602-1986.

3.4 Furnish and install wall plates for all wiring devices, and outlet boxes, including special outlets, sound, communication, signal, and telephone outlets, etc. as required. All cover plates shall be appropriate for type of device.

END OF SECTION

SECTION 26 51 14
LED LIGHTING FIXTURES AND LAMPS

PART 1 – GENERAL

1.1 Furnish and install all lighting fixtures with lamps as specified and as shown on the drawings. Fixtures shall be complete including canopies, hanger, diffusers, ballasts, etc.

1.2 Submit manufacturer's data for each fixture type including the following:

1.2.1 Lighting fixture catalog data and photometry.
1.2.2 Lamp catalog data for each fixture type.
1.2.3 Driver catalog data for each fixture type.
1.2.4 Fixture warranty.

1.3 <u>Common submittal mistakes which will result in the submittal being rejected:</u>

1.3.1 Not including lamp and driver information for each fixture type.

1.3.2 Not including all items listed in the above itemized description.

1.3.3 Including catalog cut sheets which have several items on a page, and not clearly identifying by highlighting, underlining or clouding the items to be reviewed, or crossing out the items which are not applicable.

1.3.4 Not including actual manufacturer's catalog information of proposed products.

1.3.5 Do not include multiple manufacturers for similar products and do not indicate "or approved equal" statements, or "to be determined later" statements. The products being submitted must be the products installed.

PRODUCT SUBSTITUTION

1.4 All substitutions or alternate fixtures to those indicated on the project fixture schedule shall be submitted for approval (7) business days prior to the project bid date. Approvals <u>when</u> accepted will be issued in the form of an addendum. No consideration for substitutions will be provided after the award of the contract.

1.4.1 The substitution request must include a statement indicating the difference in price of both the specified and alternate product, both contractor and list price. The substitution request must include a comparison of the total fixture wattage, total fixture lumens, fixture efficiency and warranty comparison.

1.4.2 When proposing to substitute lighting fixture and/or fixture retrofit, a point by point photometric calculation of a typical application as used in this project shall

be included. A calculation of the specified and the proposed alternate shall be included.

PART 2 – PRODUCTS

2.1 All catalog numbers are given for manufacturer's identification and shall not relieve Contractor from responsibility of full conformance to all applicable written description requirements governing material and fabrication, either in the general or specific sections. Where catalog numbers are indicated as modified, no modification will be required if the standard unit fully conforms to descriptive requirements in the Specifications and matches specified ceiling.

2.2 All fixtures of the same type shall be of one manufacturer and of identical finish and appearance. All fixtures and component parts shall bear the UL label.

2.3 All steel parts shall be phosphate treated in multistage power spray system for corrosion resistance and paint adhesion. Final finish shall be electrostatically applied baked white enamel of not less than 87 pct. reflectance on reflecting surfaces.

2.4 Each fixture shall have a continuous light-seal gasket seated in such manner as to prevent any light leak through any portion or around any edge of the trim frame.

2.5 Diffusers shall be framed in a hinged, continuous assembly. Diffuser frame latches shall be spring-loaded or cam-operated.

2.6 All recessed fixtures shall be provided with frames appropriate for the type of ceiling involved. No fixtures shall be ordered until the ceiling construction has been verified by the Contractor.

MINIMUM LUMINARY REQUIREMENTS

2.7 Electrical Components, Devices and Accessories: Listed and labeled as defined in CEC by a qualified testing agency, and marked for intended location and application.

2.8 Recessed Fixtures: Comply with NEMA LE 4.

2.9 CRI of **minimum 80 CCT of 4100 K**.

2.10 Rated lamp life of 50,000 hours minimum.

2.11 Lamps dimmable from 100 percent to 0 percent of maximum light output.

2.12 Nominal Operating Voltage: **120 V / 277 V ac**

PART 3 – EXECUTION

3.1 All lighting fixtures shall be supported as follows:

3.1.1 From the outlet box by means of a metal strap where its weight is less than five pounds.

3.1.2 From its outlet box by means of a hickey or other threaded connection where its weight is from five to fifty pounds.

3.1.3 Directly from the structural slab or joists where its weight exceeds fifty pounds.

3.1.4 Lighting fixtures shall be supported independent of the ceiling system or additional ceiling support must be added to carry the weight of the lighting fixtures. Recessed lighting fixtures supported from ceiling grid tees shall be furnished with hold down clips in conformance with CEC 410 - 16, spring clips will not be permitted. All fixtures which the manufacturer has not provided UL approved clips, must be attached to the fixture and ceiling grid by metal screws.

3.2 Furnish and install supplementary blocking and support as required to support fixture from structural members. Contractor shall submit proposed blocking method for all suspended lighting fixtures for approval prior to rough in.

3.3 Suspended and/or pendant mounted fixtures shall be provided with four aircraft safety cables extending in opposite directions, attached to the fixture, and supported from a structural member. The contractor shall submit proposed fixture mounting and aircraft cable attachment methods for approval prior to fixture rough in.

3.4 Class 1 wiring to the fixture must be installed either conduit or type MC-PCS cabling no open wiring shall be permitted.

3.5 Chain suspension may be used only where specifically permitted on the drawings. Chain shall be heavy duty, nickel or cadmium plated, suitable for weight of specific fixture.

3.6 Shop drawings shall be furnished for each fixture type. Catalog cuts, illustrating conformance with specifications, will be acceptable for standard units. Shop drawings shall indicate materials, assembly, finish and dimensions.

3.7 Photometric data shall be furnished for any fixture substituted for those listed on the schedule.

3.8 Any driver which produces a greater than normal amount of noise shall be replaced by the contractor. Normal will be determined by the level of sound produced by other similar fixtures operating in the area.

END OF SECTION

SECTION 26 90 90
ELECTRICAL CLOSEOUT

PART 1 – GENERAL

1.1 Upon completion of the electrical work, the entire installation shall be tested by the Contractor, and demonstrated to be operating satisfactorily to the Architect, Engineer, Inspector and Owner.

1.2 All testing and corrections shall be made prior to demonstration of operation to the Architect, Engineer, Inspector and Owner.

1.3 In addition to the demonstration of operation, the Contractor is also required to review the content and quality of instructions provided on items demonstrated with the Architect, Engineer, Inspector and Owner.

PART 2 – EXECUTION

2.1 Wiring shall be tested for continuity, short circuits and/or accidental grounds. All systems shall be entirely free from “grounds,” “short circuits,” and any or all defects.

2.2 Motors shall be operating in proper rotations, and control devices functioning properly. Check all motor controllers to determine that properly sized overload devices are installed, and all other electrical equipment for proper operation.

2.3 Tests and adjustments shall be made prior to acceptance of the electrical installation by the Architect, and a certificate of inspection and acceptance of the electrical installation by local inspection authorities shall be provided.

2.4 All equipment or wiring provided which tests prove to be defective or operating improperly shall be corrected or replaced promptly, at no additional cost to the Owner.

2.5 Test all motor and feeder circuits with a “megger” tester to determine that insulation values conform to Section 110-20, California Electrical Code (CED). Test reports must be submitted and approved by the engineer before final acceptance.

2.6 Test all grounding electrode connections to assure a resistance of no more than 10 ohms is achieved. Augment grounding until the ohmic value stated above is achieved. Provide certified test results to the Architect, Engineer and Inspector.

END OF SECTION

SECTION 27 01 00
COMMUNICATIONS GENERAL PROVISIONS

PART 1 - SUMMARY

1.1 This Division of the specifications outlines the provisions of the contract work to be performed as a subcontract under the Division 26 scope of work. Reference the Division 26 Electrical General Provisions for scope of work and general requirements.

1.2 In addition, work in this Division is governed by the provisions of the bidding requirements, contract forms, general conditions and all sections under Division 1 requirements.

END OF SECTION

SECTION 27 10 00
VOICE / DATA INFRASTRUCTURE

PART 1 – GENERAL

1.1 Include all labor, equipment and materials necessary for providing a complete networking infrastructure system as described herein and/or as indicated on the drawings.

1.2 Related specification sections:

1.2.1 Section 26 01 00 – General Provisions
1.2.2 Section 26 05 19 – Conductors
1.2.3 Section 26 05 33 – Conduit and Fittings
1.2.4 Section 26 05 34 – Outlet and Junction Boxes

1.3 Approved minimum Product and Contractor Extended Warranty Certifications;

1.3.1 All components shall be manufactured by the approved manufacturer, the installing Contractor must have the accompanying certification from the product manufacturer for installation of an "Extended Warranted System" as required by each manufacturer and as indicated in these specifications.

1.3.1.1 Specified system warranties are to be established between the component and cable manufacturers and the District, warranties between the cable manufacturer only or installing Contractor and the District are not considered equal.

1.3.1.2 Warranty: Warranty shall be a full "Performance Warranty" installed by a "Certified Contractor" as specified by the approved manufacturer. The Contractor must provide documentation from manufacturer indicating their qualifications for installation of the system, in compliance with the manufacturer's warranty program at the proper level of coverage. A "Component Warranty" will not be considered equal.

1.4 Acceptable manufacturers are:

1.4.1 **Commscope**

1.4.1.1 Installing contractor must be Commscope certified to install this system

1.4.1.2 Installing Contractor must be PartnerPro certified to install any of the systems under the Commscope Family of brand names

1.4.1.3 The Infrastructure System shall be provided with a 25-Year Warranty.

1.4.2 **Warranty: Warranty shall be a full "Performance Warranty" installed by a "Certified Contractor" as specified by the approved manufacturer. A "Component Warranty" will not be considered equal**. All components, labor, and 'Link Performance Criteria" shall be warranted by the approved manufacturer. Warranty shall be to the District for 25-years after District acceptance and sign-off of the completed system. The contractor must provide documentation from the approved manufacturer as indicated in Section 1.3 indicating their qualifications for installation of this system in compliance with the manufacturer's warranty requirements as a Certified Contractor.

1.4.3 Equipment qualifications: It is the intent of these specifications that each bidder provides all hardware, components and installation services that are necessary to ensure a fully operational wiring system including warranties, as shown in the EIA/TIA Category-6 and the Augmented Category-6 (6A) guidelines.

1.4.4 All components, parts, infrastructure, patch cables, termination panels and cables must be classified by the manufacturer or manufacturers as a part of the "Extended Warranty" program. Contractor may not mix in components from other certified programs or materials that are not considered part of the "Lifetime" warranty.

1.4.5 Systems or components as manufactured by any other manufacturers which, are not specifically listed in 1.3.2 are not approved for use on this project. Specified system warranties are to be established between the component manufacturers and the owner, warranties between the cable manufacturer or installing contractor and the owner are not considered equal.

1.5 **Installing Contractor qualifications**: Firms and their personnel must be regularly engaged in the installation of data networking cabling and equipment for systems of similar type and scope. The Contractor must have a full-service office able to respond to emergency callouts during the warranty period. The Contractor must also provide complete installation of all wiring and devices or equipment. **Subcontractors with Electrical Contractors or other warranted or non-warranted Contractors for supervised installation of any part of this system are not approved.**

1.5.1 Contractor shall have on staff a minimum of (1) BICSI RCDD as full-time employees.

1.5.2 The successful Contractor shall be a California licensed C7 or C10 Premise Wiring Contractor as defined in this specification.

1.5.3 All work shall be performed under the supervision of a company accredited and trained by the Manufacturer of the components and cable and such accreditation must be presented with the bid submittal. All personnel performing work on this project must have successfully completed the manufacturer's training courses to completely comply with the extended

warranty requirements prior to performance of any work on this project. Accreditation will consist of individual employee certifications issued by the manufacturer or manufacturers.

1.5.4 All personnel engaged in the testing of premises fiber optic and copper UTP cable systems must have successfully completed the test equipment manufacturer's training courses. Certification of such training must be presented with the bid submittal. Cut sheets of the test equipment to be utilized shall be provided with Phase I project material submittals.

1.5.5 **This project shall employ Category-6 and Augmented Category-6 cabling. The Contractor shall install the related components in relation to the performance requirements for the type of cable installed**.

1.5.6 If Contractor routes cable and/or associated pathways in another route than indicated on the drawings, they shall maintain all maximum cable installation distances as required by the manufacturer's distance limitations.

1.6 In order to ensure project cohesion, a single point of contact is required to provide a "TURNKEY" solution. The work covered under this section of the specification consists of furnishing all: labor, cabling, equipment, supplies, materials, and training.

1.7 The drawings indicate a schematic routing of cables above-ceiling cable prior to bid. Where cables penetrate through walls a conduit sleeve shall be provided. Where cables pass through fire rated walls, the conduit sleeve shall be sealed to maintain the rating of wall assembly.

1.8 Unless otherwise noted in the project drawings or these specifications, the Division 26 Contractor shall provide the installation of all conduits, outlet and junction boxes, trenching and pull box installation.

1.9 General Submittal Requirements

1.9.1 **Group #1 Submittal** shall be made in electronic format within (20) working days after the award of the contract by the District. This submittal shall include the following:

1.9.1.1 Complete Bill of Materials in Excel Spreadsheet format with bills of quantities, including all materials, components, devices, and equipment required for the work. The bills of quantities shall be tabulated respective of each and every system as specified and shall contain the following information for each Section listed - Description and quantity of each product, Manufacturer's Name and Model Number, Manufacturer's Specification Sheet or Cut Sheet and Specification Item Number referenced for each required product or if not shown in the specifications, Drawing Detail

Number being referenced. (ie; Spec. 27 20 00 Item 2.1.3 and/or Detail #1/E4.15).

1.9.1.2 Material Cut Sheets shall provide detailed product information and shall be original manufacturer product bulletins.

1.9.1.3 Copies of material information from vendor websites shall not be considered equal and will not be accepted. Copies of Web pages which include multiple pages of irrelevant information not associated with the product cut sheet shall not be considered equal and will not be accepted.

1.9.1.4 Material Cut Sheet part number provided shall be highlighted or provided with an arrow directed at the corresponding part number.

1.9.1.5 Equipment items which have individual components will require that all component parts be listed individually.

1.9.1.6 Description of any specialty backbox requirements

1.9.1.7 All wiring types required for installation of this system

1.9.1.8 Spare parts shall be listed individually to verify proposed quantity

1.9.1.9 Include with submittals all warranty information and a description of support and maintenance services to be provided. Also include all licenses and maintenance agreements required for continued operation of the equipment.

1.9.2 **Group # 2 Submittal** shall be provided within (20) working days after the approval of the Group # 1 submittals and prior to any fabrication or field conduit installations. All shop drawings shall be engineered and drawn on a CAD System. Each submission shall include 'D' or ’E’ size print copies to match the contract drawings, and (1) USB Flash Drive copy with files in a AutoCAD format. Building floor plan CAD files will be made available. Contractor shall make the request for drawings in writing directly to Johnson Consulting Engineers, confirmation of the request and a release form will be forwarded to the Contractor to include a signed copy prior to release of files. Detail or riser diagram sheets or any other drawings other than floor or site plans, will not be made available to the Contractor. Phase II Submittals drawings shall include the following:

1.9.2.1 MDF and IDF equipment rack or cabinet elevations will be required to be provided including cable routing, grounding, support, UPS, network electronics, etc. and position of all components in the rack or cabinet.

1.9.2.2 Provide labeling plan which identifies the proposed scheme for identifying all components including racks, patch panels (fiber and copper), site distribution feed cables, horizontal station cables and site conduit systems (handholes, pullboxes, etc.).

1.9.2.3 Provide shop drawings showing all end device locations, tap values, paging zones and amplifier sizing for each zone for analog speakers and horns, including devices connected to IP-Based zone controllers.

1.9.3 Common submittal mistakes which will result in submittals being rejected:

1.9.3.1 Not including the qualifications of the installing Contractor Company and Contractor's Staff.

1.9.3.2 Not including all items listed in the above itemized description.

1.9.3.3 Including catalog cut sheets which have several items on a page, and not clearly identifying by highlights, underlining or clouding the items to be reviewed (provided for the project) or crossing out the items which are not applicable.

1.9.3.4 Not including actual manufacturer's cut sheets or catalog information of proposed products.

1.9.3.5 Do not include multiple manufacturers for similar products and do not indicate "or approved equal" statements, or "to be determined later" statements. The products being submitted must be the products installed.

1.9.4 The Contractor shall make a written request directly to Johnson Consulting Engineers for electronic drawing files (CAD). As a part of the written request, please include the following information:

1.9.4.1 Clearly indicate Project Name and Client, Johnson Consulting Job Number (located in the bottom left corner of JCE Engineering Stamp) and each drawing Sheet Number required (i.e. E1.1, E2.1, E4.1 etc.)

1.9.4.2 Identify the Name, Company, Title, phone number, mailing address and e-mail address of the person to receive the files.

1.9.4.3 Detail or Riser diagram sheet, System Schematic drawings or any other drawings other than floor plans or site plans, will not be made available to the Contractor.

1.9.4.4 Files will only be provided in the AutoCAD format in which they were created (i.e. version 2015 or version 2016). Files will not be made available in REVIT format.

1.9.4.5 Requests for files will be processed as soon as possible; a minimum of (7) working days should be the normal processing time. The Contractor shall be completely responsible for requesting the files in time for their use and delays in requesting files will not alleviate the Contractor from submitting required documents within the required timeline.

PART 2 – **PRODUCTS**

2.1 Equipment racks have been detailed on the drawings and additional component information requirements have been described in the following sections and on the drawings. The following is a list of approved manufacturers for each type of rack to be furnished.

2.1.1 Alternate equipment manufacturers other than those indicated will not be reviewed or approved for use on this project.

2.1.2 **(Open Frame)** shall be manufactured by Chatsworth Products Inc. (CPI). CPI Model #50120-703 Quadrarack 4-Post equipment rack, 84" High by 20.3" Wide by 29" Deep, black color. See MDF and IDF Room sketches for quantity of racks required. Alternate rack option as manufactured by Hubbel Model #SF841929T NEXTFRAME 4-Post equipment rack.

2.2 **Vertical Slim Wall Mounted IDF Cabinet -** IDF Cabinet Requirements;

2.2.1 Provide wall mount cabinet with vertical mounting rails for the lower equipment. Provide Hubbell ReBox Model #RE4X, with 2RU upper rack rail capacity and 5RU lower rack rail capacity. Refer to floor plans and detail drawings for additional requirements.

2.2.2 Provide optional 5RU Bracket Model #REKZ.

2.2.3 Bond to electrical box in cabinet. Follow manufacturer's instructions.

2.2.4 All fiber optic feed cables routed to the IDF Cabinet shall be provided with 20-feet of slack for a service loop, mounted in the accessible ceiling above the IDF cabinet. Provide a 12" diameter service loop manager for fiber by Leviton #48900-IFR. Maximum of (3) fiber feed cables per manager

2.2.5 Provide (1) ground bus bar kit per IDF Room. Ground Bus Bar Kit as manufactured by CPI #13622-010 or approved equal. Ground Bus Bar and all bonding conductors to the bus bar shall be labeled. Grounding conductors shall be routed to the equipment racks, cable runway and electrical panel. Ground Bus Bar shall be mounted below the IDF Cabinet as shown in the drawing details.

MDF Room Requirements

2.3 The main Distribution Frame (MDF) Room is existing

2.3.1 Provide backboard 8'-0" high x ¾" thick, with a minimum 48" width. Refer to the floorplans for the actual layout of the backboard coverage. Plywood mounting backboard shall be flame resistant, painted with fire resistant paint "white" or color to match the room finish. Contractor shall provide minimum one side finish grade plywood. Backboard shall be mounted with finish side out, regardless of location of fire rating stamp. Show proof of fire rating stamp or IOR on Inspector prior to installation.

2.4 Provide Fiber Optic Feed Cable Patch Panels – Fiber optic termination equipment (rack mounted), including all associated installation hardware. The equipment must have a sufficient number of ports to connect all fibers in every cable terminated at this location. Provide 25% spare capacity for future wiring requirements. Provide blank fillers for all used portions of the panel. All fiber feed cables shall be terminated in a single fiber optic patch panel.

2.4.1 MDF location shall be furnished with a minimum 24-Port patch panel, fully loaded with bulkheads. Type of connectors in the bulkheads shall be determined by the type of connectors used for termination of the fiber feed cables.

2.4.2 Contractor shall provide a minimum of 6-feet of slack on the fiber feed cable in the fiber optic patch panel. The first 48" of a tight buffered cable or the first 24" of a loose tube cable shall not be stripped back in the patch panel. Each type of cable shall have a minimum of 24" of stripped slack within the patch panel. Total slack within the patch panel shall not be less than 6-feet in length.

2.4.3 All fiber cables shall be secured to the patch panel with the Kevlar strength members at the manufacturer provided anchor point at the rear of the panel.

2.4.4 Provide all other items as detailed on the drawings.

IDF Location Requirements

2.5 The Intermediate Distribution Frame (IDF) Room shall be a secondary wiring and equipment location for the data networking system. The Contractor shall include the following items at this location:

2.5.1 Provide backboard 8'-0" high x ¾" thick, with a minimum 48" width. Refer to the floorplans for the actual layout of the backboard coverage. Plywood mounting backboard shall be flame resistant, painted with fire resistant paint "white" or color to match the room finish. Contractor shall provide minimum one side finish grade plywood. Backboard shall be mounted with finish side out, regardless of location of fire rating stamp. Show proof of fire rating stamp to IOR on Inspector prior to installation.

2.6 Provide Fiber Optic Feed Cable Patch Panels – Fiber optic termination equipment (rack mounted), including all associated installation hardware. The equipment must have a sufficient number of ports to connect all fibers in every cable terminated at this location. Provide 25% spare capacity for future wiring requirements. Provide blank fillers for all used portions of the panel. All fiber feed cables shall be terminated in a single fiber optic patch panel.

2.6.1 Each IDF location shall be furnished with a minimum 24-Port patch panel, fully loaded with bulkheads. Type of connectors in the bulkheads shall be determined by the type of connectors used for termination of the fiber feed cables.

2.6.2 Contractor shall provide a minimum of 6-feet of slack on the fiber feed cable in the fiber optic patch panel. The first 48” of a tight buffered cable or the first 24” of a loose tube cable shall not be stripped back in the patch panel. Each type of cable shall have a minimum of 24” of stripped slack within the patch panel. Total slack within the patch panel shall not be less than 6-feet in length.

2.6.3 All fiber cables shall be secured to the patch panel with the Kevlar strength members at the manufacturer provided anchor point at the rear of the panel.

2.6.4 Provide all other items as detailed on the drawings.

2.7 Provide Category-6 Modular Patch Panels (rack mounted) with RJ45 style connectors for terminating all twisted pair cables from each Voice/Data/IP-Page outlet, Audio-Visual, Security Camera or other Category-6 devices served from this IDF location. Provide 25% RJ45 Inserts spare capacity for future wiring requirements. Confirm color requirements with District IT Department. All patch panels shall be 24 or 48-ports maximum. Provide cable support bars at the rear of each patch panel. All cable shall be secured to bars with Velcro straps.

2.8 Provide Category-6A Modular Patch Panels (rack mounted) with RJ45 style connectors for terminating all twisted pair cables from each WAP location served from this IDF Location. Provide 25% RJ45 Inserts spare capacity for future wiring requirements. All patch panels shall be 24 or 48-ports maximum. Provide cable support bars at the rear of each patch panel. All cable shall be secured to bars with Velcro straps.

2.8.1 Patch panels shall be furnished Laser/Ink Jet Printer adhesive labeling to identify additional information required by the District labeling standards. Each panel shall be provided with Panduit Label Kit Part #C252X030FJJ (or approved equal).

2.8.2 Patch Panels to be provided with color coded Category-6, RJ-45, modular inserts. The 25% spare capacity for future at each IDF or MDF location shall be filled out with Voice/Data color modular inserts. Inserts shall be provided in the following colors per the District Standards;

2.8.2.1 Voice/Data – Blue

2.8.2.2 Wireless Access Points – Green

2.8.2.3 Audio-Visual Data Ports – Yellow

2.8.2.4 Security and Video Surveillance – Orange

IDF UPS Requirements

2.9 The Contractor shall coordinate with the Division 26 Contractor to properly locate the power outlet connection for the UPS in the IDF Cabinet. The location shown on the floor plans is diagrammatical and does not give the Division 26 Contractor an exact placement. Refer to the drawing details for location of power outlet inside Cabinet.

2.10 Vertical Slim Wall Mounted IDF Cabinet shall be furnished and installed with a UPS by the Contractor.

2.10.1 IDF Room UPS; Uninterruptible power supply with mounting brackets and all cables. UPS shall be provided with backplane configuration containing:

2.10.1.1 Minimum of (6) 15-amp, 120-volt, non-locking, NEMA 5-15R, output receptacles.

2.10.1.2 Input of (1) 15-amp, 120-volt, non-locking, NEMA 5-15P plug installed on 10'-0" power cord.

2.10.1.3 TrippLite SmartPro 120V 750VA 600W Line-Interactive Sine Wave UPS, 1U Rack/Vertical, Model #Smart750RM1U (No Approved Equal)

2.10.1.4 Provide each UPS with the optional Network interface card – Model #SNMPWEBCARD in UPS. Power Management Software to be included with all UPS models.

2.10.1.5 All UPS products shall be furnished with a 3-Year warranty.

2.10.1.6 UPS shall be vertically mounted in the Slim Wall Mount IDF Cabinet. Confirm with District IT Department for arrangement of components inside IDF Cabinet prior to installation.

Fiber Optic Patch Cords

2.11 Fiber optic patch cords shall be furnished and installed by the Contractor.

2.12 All fiber optic patch cords furnished by the Contractor shall match the grade and glass of the fiber optic feed cable installed for the network infrastructure cabling system. The Contractor shall confirm with the District IT Department the type of connector required at the network equipment prior to ordering or installing the patch cords.

2.13 Multimode Fiber Optic Patch Cords – Patch cords shall be duplex 50/125um, laser-optimized, OM4 grade multimode optical glass. Fiber optic patch cords shall be furnished with LC connectors at both ends. Fiber patch cords shall be furnished with ceramic ferrules. All Multimode patch cords shall be Aqua (Lt. Blue) in color. Patch cords shall be 3-feet (1 meter) in length. Provide (2) Fiber Cable Assemblies for each end (IDF/MDF) of the fiber cable run for a total of (4) Fiber Cable Assemblies per fiber feed cable run.

2.14 Contractor shall be responsible for confirming the network switch connections with the District IT Director prior to ordering or installing the patch cords.

Copper Patch Cords

2.15 Copper patch cords shall be furnished and installed by the Contractor.

2.16 Category-6 patch cables installed at the IDF location (patch panel end) shall match the color of the outlet inserts on the patch panel and faceplate. The patch cables will be provided as 50% of all patch cables 1-foot in length and 50% of all patch cables 3-foot in length for standard installations. Approved patch cables shall be as manufactured by Commscope:

2.16.1 Patch cords shall be in compliance with the Commscope “Channel” warranty program.

2.17 Category-6 patch cables installed at the workstation (outlet) location shall match the color of the outlet inserts on the faceplate. Approved patch cables shall be as manufactured by Commscope:

2.17.1 Provide 100% of the total Category-6 cable ports provided on the patch panels.

2.17.2 All patch cords to be installed by Contractor. Provide 100% of total copper patch cords required to be (10) feet in length, unless otherwise noted.

2.17.3 Patch cords installed at Wall Mounted Telephone and Network Camera locations shall be (2) feet in length.

2.18 **Augmented Category-6** patch cables installed at the IDF location (patch panel end) shall match the color of the outlet inserts on the patch panel and faceplate. The patch cables will be provided as 50% of all patch cables 1-foot in length and 50% of all patch cables 3-foot in length for standard installations. Approved patch cables shall be as manufactured by Commscope:

2.18.1 Patch cords shall be in compliance with the Commscope “Channel” warranty program.

2.19 **Augmented Category-6** patch cables installed at the workstation (outlet) location shall match the color of the outlet inserts on the faceplate. Approved patch cables shall be as manufactured by Commscope:

2.19.1 Patch cords installed at WAP (Wireless Access Point) locations shall be (3) feet in length

2.19.2 Patch cords installed at IP-Based Network Camera locations shall be (1.5) feet

2.20 Requirements for all copper patch cords furnished:

2.20.1 Color of patch cords shall be determined by the color code shown in detail drawings and specifications.

2.20.2 Patch cords shall as manufactured by Leviton, Panduit, Ortronics, Siemon or any other manufacturer not listed are not approved through the "Channel" warranty.

2.20.3 Patch cords furnished must be in compliance with the manufacturer's "Channel" warranty requirements. Patch cords not warranted through the selected manufacturer Channel warranty program will not be approved for use with the network infrastructure.

2.20.4 Provide all other items as detailed on the drawings.

Campus Indoor/Outdoor Fiber Optic Feed Cable

2.21 Provide one continuous fiber optic cable routed from the Main Distribution Frame fiber patch panel to each intermediate Distribution Frame fiber patch panel, and/or other locations as shown on the drawings.

2.22 Outdoor Fiber Feed Cable Applications – Fiber optic cable shall be rated for indoor/outdoor riser rated applications. Construction shall consist of; all dielectric, indoor/outdoor Riser Rated Tight Buffer Style, flame retardant PVC or PE jacket, rated OFNR, Outer and Inner Layer of Dielectric Strength Yarns with central member constructed of Dielectric Strength Yarns, dry water-blocking compound, and blank fillers as required. Fiber shall be small form factor type fiber for use in existing conduit and pathways and shall not exceed an Overall Outside Diameter (OD) of .370". Central tube or loose tube type fiber will not be considered equal.

2.23 Fiber optic feed cables shall be partially installed in the existing pathways and in new pathways unless otherwise shown on the drawings. Contractor shall not interrupt service to the users without a planned outage approved by the District. The Contractor may use the existing feed cable to demoed buildings as a pull wire or other cables identified to be removed from the existing conduits, provided that the service is back on-line prior to the user's normal working hours.

2.24 New Fiber Optic Feed Cables – Refer to the site plans, floor plans and drawing details for locations of new fiber optic feed cable runs. Fiber optic feed cables for the data infrastructure must be installed as follows:

2.24.1 Feed cables shall be clearly defined and labeled for each system. Provide color coding designations with a different color marker for the multimode and/or single mode fiber feed terminations in the fiber patch panels.

2.24.2 Cable shall contain one or all types of fibers listed below:

2.24.3 Provide Multimode 50/125-micron fiber optic glass, (minimum OM4+ laser-optimized grade, extended distance) for dual mode operation at 850 nm and 1300 nm wave lengths.

2.24.4 Maximum attenuation at 3.0dB/km @ 850nm and 1.0dB/km @ 1310nm. Minimum 1-gigabit Ethernet distance guarantee of 1110 meters @ 850nm and 600 meters @ 1300nm. Minimum 10-gigabit Ethernet distance guarantee of 550 meters @ 850nm/1300nm. Fiber shall be ISO-TIA OM4 plus rated.

2.24.5 Terminate cables at the Fiber Optic Patch Panels with “LC-Type” Fiber Optic Connectors

2.24.6 Additional labeling on the fiber optic patch panel is required to identify which type of fiber is terminated on the bulkheads in the panel. All connectors and bulkheads shall be color coded with Aqua for Multimode fiber type.

2.25 Each fiber optic cable shall contain the quantity of strands of optical fibers as detailed on the drawings.

2.26 All fibers in a multi-fiber cable shall be fully operational within the required performance characteristics. If any individual fiber does not meet the minimum standards, the entire cable must be replaced, end to end, including connectors, without any additional expense to the customer.

2.27 Acceptable cables shall be:

2.27.1 Commscope Multimode – Systimax LazrSpeed 550 OM4

2.28 Above glass types are an example of product names per manufacturer. Confirm requirements for indoor/outdoor, riser and plenum rated cable with riser drawings and site plans. Part numbers for composite style cable will vary greatly. Confirm part numbers with manufacturer.

Category-6 Station Cable

2.29 Contractor shall provide Category-6 UTP cable to each Data, Voice, IP Page, Audio-Visual Data Connection, IP Camera or any other location as indicated on the drawings and specifications. Provide quantity of cables as indicated on the drawings at each location.

2.30 Provide one Category-6, 4-pair unshielded twisted pair (UTP) cable from the nearest MDF or IDF location to each RJ45 data outlet port indicated on the drawings. Dual port outlets will require two such cables. Four port outlets will require four cables. Refer to the drawing details and specifications for jacket color requirements for each type of connection. Confirm color of cable jacket prior to ordering with the District IT Director. Contractor shall be responsible for providing the correct jacket color per the drawings per District Standards.

2.31 District Standard Color Code for Category-6 UTP shall be the following;

2.31.1 Connections for all Voice and Data ports shall be Blue color.

2.31.2 Connections for all Wireless Access Point ports shall be Green color.

2.31.3 Connections for all Audio-Visual port applications shall be Yellow color. (Includes data connections at Flat Panels, Projectors, Sound System Cabinets, etc.)

2.31.4 Connections for all Security and Video Surveillance ports shall be Orange color.

2.32 The cable shall be UL or ETL rated and UL verified in compliance Category-6 EIA/TIA standards. Approved cables for Network Infrastructure System:

2.32.1 Commscope – CS37R

2.33 Where data cables are indicated to run underground, Contractor shall use a Category-6 flooded cable; CommScope - Ultra Media Series - #6NF4

Category-6 Outlets

2.34 Unshielded twisted pair Category-6 outlets shall be an RJ45 Enhanced performance type 8-position / 8-conductor modular jacks and shall comply with Category-6 performance requirements. Provide single port, dual port, four port or quantity as indicated on the floor plans at each outlet location. All outlets shall be wired in an EIA/TIA 568B configuration.

2.35 Provide Category-6 inserts, wired for EIA 568B. Provide installation kits for all locations furnished with Category-6 UTP cabling.

2.36 Refer to the detail drawings for color of the Category-6 outlets required. Contractor shall be responsible for confirming all color requirements prior to ordering.

2.37 Provide the following Category-6 UTP data connector per Network Infrastructure warranty requirements;

2.37.1 Commscope - USL Series USL600

2.38 Network IP Cameras - Provide data connections for IP-Based Camera Outlets terminated at the Camera location as shown in the drawing details. Provide surface mount box by Commscope Series 2-Port #M102SMB-B-262. Label the cables and faceplate the same as standard data outlets. The location shall also be furnished with a blank weather-tight faceplate to protect the data termination until the cameras are installed.

2.39 Cables must be terminated at the data outlet with the Commscope termination tool per District Standards.

Augmented Category-6 Outlets

2.40 Unshielded twisted pair Augmented Category-6 outlets shall be an RJ45 Enhanced performance type 8-position/8 conductor modular jacks, and shall comply with Augmented Category-6 performance requirements. Provide single port, dual port, four port or quantity as indicated on the floor plans at each outlet location. All outlets shall be wired in an EIA/TIA 568B configuration.

2.41 Provide unshielded Augmented Category-6 inserts, wired for EIA 568B. Provide unshielded installation kits for all locations furnished with Augmented Category-6 UTP cabling.

2.42 Augmented Category-6 Outlets shall be provided at all WAP locations. Refer to the detail drawings for color of the Category-6 outlets required. Contractor shall be responsible for confirming all color requirements prior to ordering.

2.43 Provide the following unshielded Augmented Category-6 UTP data connector per Network infrastructure warranty requirements:

2.43.1 Commscope UNJ 600 Series UNJ600

Outlet Faceplates

2.44 Provide a two-port faceplate for all one and two port outlet locations. Provide blanks for all unused openings.

2.45 Provide a four-port faceplate for all three and four port outlet locations. Provide blanks for all unused openings

2.46 Faceplates to be provided with label windows and two to six ports, depending on requirements. Standard District color shall be white and standard faceplates are to be

single gang, unless otherwise noted on drawings. Panduit Mini-Com Executive Series Faceplates. Blank inserts shall match faceplates. Provide blanks for all unused openings.

2.47 Contractor shall provide a single gang 6-Port Faceplate for the Teacher's "3P LO" Wallplate location where shown on the floor plans. Three (3) Ports will be used for the data cabling outlets, Two (2) Ports will be used for the 3.5mm Audio Microphone Input/ALS System Base Audio Output Panduit #CM35MSCWHY and the last port shall be furnished with a blank insert. Contractor shall furnish and install 6-Port Faceplate and all data, Audio-Visual and blank inserts. Coordinate installation with the 27 20 00 Contractor. See the Classroom A/V System Diagram in the Detail Drawings for additional requirements.

2.48 All voice trunk/modem locations shall be provided as single port outlets. Requirements shall be the same as a single port data outlet as shown on the Technology Legend.

2.49 Wall Mounted Telephone Outlet - Provide single port small surface mounted box Commscope Series 1-Port #M101SMB-B-262, in White, for Wall Mounted Telephone Outlets. Mount data outlet in single gang J-Box at Telephone location. Provide blank faceplate with ¾" hole for pass-through of patch cable to telephone. Label the cables and faceplate the same as standard data outlets. Telephone device District furnished and installed. Provide 2-Foot Category-6 Patch Cable.

2.50 Network IP Cameras - Provide data connections for IP-Based Camera Outlets terminated at the Camera location as shown in the drawing details. Provide surface mount box by Commscope Series 2-Port #M102SMB-B-262. Label the cables and faceplate the same as standard data outlets. The location shall also be furnished with a blank weather-tight faceplate to protect the data termination until the cameras are installed.

2.51 All faceplates and surface mount outlet boxes shall be furnished with label windows. All labeling shall be installed within the label window.

2.52 All data outlet faceplates shall have a unique sequential identification number in the label window of the faceplate. Hand-written labels are not permitted. All color schemes shall be approved by the customer prior to installation.

2.53 Colored outlets are required for this project. Refer to the detail drawings for the exact color scheme to be provided. Inserts submitted that do not follow the color and identification requirements will be rejected. Inserts installed that do not follow the color coding as shown in the detail drawings will be replaced at the Contractor's expense.

2.54 All labels will be installed under label window. Labels adhered to the surface of the faceplate will not be accepted per District Standards.

2.55 Final labeling format for all outlet faceplates and patch panels will be made by the Director of the District IT Department.

2.56 Reference the drawings for special outlet configurations or plate requirements.

PART 3 – **VIDEO SURVEILLANCE REQUIREMENTS**

3.1 Provide (2) Category-6 UTP cables from the IDF Cabinet to each camera location. All cables installed in underground conduit shall be rated for Wet Location. The cables shall be terminated in the junction box on a surface mount box. The Exterior Camera location J-Boxes shall be provided with a weatherproof grommeted stainless steel faceplate for future use. Label the faceplates on the inside with an adhesive label so the labels won't fall off in addition to the standard labeling of the surface jack.

3.2 Refer to the floor plans for the Camera locations. Locations near corners of the building shall be installed as close to the corner as is allowed by the building's structural members. Cameras and mounts will be District furnished and installed. Refer to the drawing details for additional requirements.

PART 4 – **WIRELESS ACCESS POINTS (WAP) REQUIREMENTS**

4.1 The District will provide all Wireless Access Point units and programming will be by the District IT Department. The Contractor shall install each Wireless Access Point as required and provide patch cord installation at the WAP. The Contractor shall provide a key sheet list including the room number, location, and MAC address of each device installed to the District IT Department.

4.2 Provide minimum 10' Service Loop on the cable at each WAP location stored above the WAP location on J-Hooks as shown in the detail drawings. Locations in areas without accessible ceiling shall have the slack stored in the ceiling at the point where the run transitions to conduit from the nearest accessible ceiling space. Full conduit runs to the IDF Closet do not require a Service Loop.

4.3 Refer to drawing details for installation requirements for WAP locations. The Contractor shall furnish and install all mounting brackets for the WAP locations in the accessible ceiling and for the wall mounted locations.

4.4 Contractor shall install the Exterior WAP units at the locations shown on the drawings. Coordinate with the District IT Department for all mounting brackets and connection of all WAPs.

4.5 Wireless Access Points shall be plugged into the data outlet mounted inside the Ceiling Mounted Audio-Visual Enclosure. Contractor shall furnish and install Cat-6A Patch Cable, length as required, from the WAP to the Audio-Visual Enclosure.

PART 5 – **INSTALLATION**

5.1 Upon completion of 10% of the cabling installation, the Contractor shall notify the Project Engineer for an inspection of the methods and types of materials used on the

project. The Contractor shall give a minimum of 72 hours notification to the Project Engineer for the scheduling of the inspection. The Contractor will be given a written review of the findings, so if adjustments are required, they can be done before the project proceeds. The Contractor shall be responsible for adhering to the findings and a follow-up inspection will not be provided.

5.2 Pull strings shall be provided with all cable runs including but not limited to: conduit stub ups, conduit sleeves, cable trays, open wiring routes, innerduct and point-to-point conduits. Pull strings shall be free from cable bundles in open wiring routes. Pull strings shall not be substituted for pull ropes for the exterior site conduits.

5.3 Velcro cable management straps are required on all Category-6 cable bundles, the last 20 feet or upon entry into equipment closet, a maximum of 12” apart. Cable bundles shall also be routed through cable managements or “D” rings in the equipment closet.

5.4 Data Contractor shall supply protective bushings or slide on rings at the ends of all exposed conduits used for data system cabling. This is to include all conduits installed for any future data cabling requirements. Contractor shall submit planned protection bushings prior to installation of cabling for approval.

5.5 Velcro cable management straps are required on the cabling in the rear section of the vertical managers in the equipment racks. Straps shall be a maximum of 12” apart. At a minimum, Velcro straps shall be provided at each point the cables are routed to the patch panels from the main bundle.

5.6 Every fiber in every fiber optic cable must be terminated at both ends of a fiber patch panel in the MDF/IDF closet or cabinet location. Termination shall be accomplished using the correct style of connectors as directed by the District with a strain relief boot. All connectors shall be of the same manufacture to ensure compatibility. Polarity of fiber strands must be observed at all times.

5.7 Labeling

5.7.1 Each cable run shall be permanently labeled at each end with a unique sequential number which corresponds to a similar number provided for each data outlet and patch panel point. A printed label shall be placed at each of the following locations:

5.7.1.1 On the cable at the rear of the patch panel or termination block. Requires the use of a self-laminating wrap around label. Brady Label self-laminating 1.2” by 1.5” wrap around label Part #29689 (NO ACCEPTALE EQUAL).

5.7.1.2 On each cable in the j-box behind the faceplate location. Requires the use of a self-laminating wrap around label. Brady Label self-laminating 1.2” by 1.5” wrap around label Part #29689 (NO ACCEPTALE EQUAL).

5.7.1.3 On the cable at the terminal strip prior to termination point. Requires the use of a self-laminating wrap around label. Brady Label self-laminating 1.2” by 1.5” wrap around label Part #29689 (NO ACCEPTALE EQUAL).

5.7.1.4 On the face of the patch panel, provide a ¾” by ¾” label with a letter or number identifying the patch panel designation. For special purpose data connections such as WAP, Audio-Visual, IP Page and IP Camera ports, the label shall be designated with colored label icon or marker.

5.7.1.5 On the face of the faceplate in the label holder window. The label shall be clearly defined with a minimum #10 font size.

5.7.2 Handwritten labels are not permitted. Where cable ID includes room number identification, the Contractor shall obtain written verification of final room numbers prior to beginning labeling (numbers on plans do not always match final room numbers). Cable pulling cross reference lists will not be accepted with final documentation.

5.7.3 Each patch panel port shall be identified with a unique sequential labeling scheme. Port identification labeling pattern shall be consistent throughout the project.

5.7.4 All faceplates shall be identified with permanent printed labels. Labels must not be subject to removal by incidental contact. Contractor shall be responsible for replacing defective labeling for a period of one year from date of final sign-off of project.

5.7.5 All fiber optic and UTP feed cables shall be identified with permanent, water resistant, printed labels. Labeling information shall include closet identifications, quantity of conductors (UTP) or strands (fiber) and house pair designations (UTP). Cables shall be labeled in the IDF/MDF closets at the site conduit entrance point, riser conduit entrance point and prior to entering either punch blocks or patch panels. Labels for fiber and copper feeds shall include both the name of the origination point and the destination point, house pair or house fiber strand count, cable composition (i.e., 12-Strand MM 50/125 LO; 6-Stand SM). See details for additional requirements.

5.7.6 Labeling will follow recommended EIA/TIA standards or as requested by the customer. Contractor will confirm labeling pattern prior to final identification or testing. All test results will be identified by the final labeling scheme. Contractor shall be required to have the labeling scheme approved in writing by the District IT Director prior to manufacture or installation of the labeling.

5.7.7 All fiber optic cables and/or innerduct shall be tagged with fiber optic warning tags in every manhole or pullbox. Fiber warning tags shall also be placed at each end of the cable in the termination closets in clear view. A minimum of (3) tags are required at each end, with a label tag on each cable in the service loop. Fiber warning tags shall be placed on fiber optic cable and/or innerduct routed through open ceiling environments at increments no less than 15 feet apart.

5.7.8 Refer to detail drawings for additional labeling requirements.

5.8 Where open wiring cables are run through the ceiling space (only permitted where specifically noted on the drawings), the wire shall be bundled together and supported above the ceiling.

5.9 All cables must be fastened to the building structure via “j-hooks” or an approved Category 6 suspension system, and not directly in contact with ceiling system. For “j-hooks” maximum fill capacity is as follows: 1-5/16” hooks – 35 cables; 2” hooks – 60 cables; 4” hooks – 120 cables. For quantities beyond 120 cables, use a sling support system such as “Erico Cable Cat” or equal. Maximum fill capacity 200 cables. D-rings, “Caddy #WMX cable hangar”, “Caddy Bridle Rings”, drive rings or any other type of wire ring support is not allowed.

5.10 Where cables pass through a fire-resistant portion of the structure, conduit sleeves shall be provided to maintain the rating of wall penetrated. Sealing of all penetrations with an approved fire barrier is required. Conduits and sleeves must remain accessible for future use. Permanent sealants may not be used to seal sleeves and conduits.

5.10.1 The 27 10 00 Contractor shall be responsible for fire-stopping all unused conduit sleeves in the ceiling or through rated walls. The Electrical Contractor shall be responsible for fire-stopping around the conduit or sleeve, unless the sleeve is installed by the 27 10 00 Contractor, in which case, the 27 10 00 Contractor shall be responsible for all fire-stopping requirements.

5.10.2 Expanding foam is not an acceptable sealant for any conduit opening. Contractor shall be responsible for complete replacement of the conduit and cabling in any conduit filled with expanding foam used as a sealant.

5.11 Fiber optic feed cables connecting to equipment racks from the MDF Room or from an adjacent IDF location, shall be installed with not less than a 20-foot service loop between the rack and mounted on the backboard. See drawings for fiber optic service loop requirements.

5.12 Provide 6 inches of cable slack at computer data system outlets inside conduit box.

5.13 In an accessible ceiling area, provide a 10-foot (stored in a Figure-8 configuration) service loop above the all data/voice outlet locations. Service loop must be securely tied up off of ceiling tiles or ceiling surface and supported at two opposite points. Neatly coil

cable without exceeding minimum bend radius limitations. Do not provide length in excess of 15 feet, as it may cause improper test results and errors.

5.14 Do not provide a service loop in the MDF/IDF Room on the UTP cables, unless otherwise noted. Cables shall be neatly routed around the perimeter of the room to the cable runway from the point of entrance into the room.

5.15 The minimum bending radius for all cables and the maximum pulling tension shall not exceed manufacturer's recommendations.

5.16 Cables installed in manholes and pullboxes shall be supported with Velcro ties or loosely fitted UV rated tie wraps, on wall mounted cable support racks. The cables shall be clearly labeled in the manhole or pullbox.

5.17 Provide a full 360-degree loop of slack cable around manhole and pullbox interiors. Cables entering handholes from the bottom, shall not be allowed to touch the bottom of the cover when closed and shall not be pinched or crushed in any way.

5.18 Cable pulling shall use a split mesh grip over the cable jacket. Connection directly to optical fibers and copper wire conductors shall not occur.

5.19 When pulled through conduits, cable pulling lubricants shall be continuously applied to all cables and be specifically approved by the manufacturer.

5.20 Where cables are pulled through or pulled from a center run, pull without splices or terminations, lead out the cables at all manholes, pullboxes, and conduits, taking care to feed them in again by hand for the next run.

5.21 For each cable pull where a cable direction change is required, flexible feed-in tubes, pullout devices, multi-segmented sheaves, etc., shall be used to ensure proper cable pulling tension and side wall pressures. Cables shall not be pulled directly around a short right-angle bend. Any device or surface the cable comes in contact with when under pull-in tension shall have a minimum radius 50% greater than the final specified minimum installed cable bending radius. The maximum possible size radius sheaves and feed-in tubes, usable in the available working space shall be provided in all situations, to ensure the minimum possible cable sidewall pulling pressure. Do not use devices with multi-segment "roller" type sheaves.

5.22 Cable lengths over 250 feet shall be machine pulled, not hand pulled. Cables shall be pulled in a continuous, smooth operation without jerking or stop-start motion after initiation of pull. Maximum cable pulling speed shall be less than 50 feet per minute. Minimum pulling speed shall be greater than 15 feet per minute.

5.23 A pull string shall be placed with all UTP and paging station cables at the time of installation. Conduit runs and surface raceway for station cabling shall be furnished with a minimum 2-Ply spiral wrap style, pull string rated for 240 ft/lbs. pulling strength, such

as manufactured by Greelee #431 or approved equal. Includes all conduit stubs and cables routed through open ceiling and cable trays. Pull strings shall be tied off in the junction box and in the ceiling. Provision for the installation of the pulls string shall apply to all empty and spare conduits as well. Single ply type pull string will not be accepted as a substitute for the 2-ply pull string.

5.24 A measuring pull tape shall be placed with all feed cables at the time of installation. Indoor riser and outdoor conduit runs between buildings designated for feed cabling, in excess of 150 feet shall be provided with a minimum ½" polyaramid style, measuring true tape pull string annotated with footage increments rated for 2500 ft/lbs. pulling strength, such as manufactured by Greenlee #39245 or approved equal. Conduit runs less than 150 feet shall be furnished with a ¼" polyaramid style, measuring true tape pull string annotated with footage increments rated for 1250 ft/lbs. pulling strength, such as manufactured by Greenlee #39243 or approved equal. Provision for the installation of the measuring pull tape shall apply to all empty and spare conduits as well. Standard twine style pull strings and standard nylon or polypropylene style pull ropes will not be accepted as a substitute for the polyaramid measuring tape pull string.

5.25 When pulling cable through conduit, cables shall be pulled straight into or out of the raceway without bends at the raceway entrance or exit. Pull in cable from the end having the sharpest bend (i.e., bend shall be closest to the reel). Keep pulling tension to minimum by liberal use of lubricant, hand turning of reel, and slack feeding of cable into duct entrance. Employ not less than one man at reel and one at manhole or pullbox during this operation. Cables shall be pulled directly from cable reels.

5.26 All cables shall be new and extend continuously from each MDF or IDF backboard or rack to all outlet locations.

5.27 Where cables are not installed in a conduit or other raceway system, they shall not be routed parallel with other line voltage equipment or wiring (120 volt and above) with 36" or within 12" of line voltage equipment or wiring where crossing.

5.28 Where OSP-Rated UTP cables or OSP-Rated fiber optic cables are routed exposed through ceiling for more than 50'-0", Contractor shall install the cable in innerduct or EMT conduit in the ceiling. Innerduct installed in the accessible ceiling space shall be a minimum of riser rated and minimum of 1" in diameter. Innderduct shall be supported minimum of every 3-feet to the structural members.

TESTING

5.29 All Category-6 cables shall be point to point (link) tested after installation/termination and verified to operate at minimum 1000Mbps. Performance of installed cables shall satisfy all current addendums to the EIA/TIA 568A standard for Category-6 wiring. In addition, testing shall satisfy all proposed amendments to the existing ISO/IEC

requirements. The wiring shall support all specified communication protocols. Testing shall support the Category-6 requirements by the EIA/TIA.

5.30 All Augmented Category-6 cables shall be point to point (link) tested after installation/termination and verified to operate at minimum 10000Mbps. Performance of installed cables shall satisfy all current addendums to the EIA/TIA 568A standard for Augmented Category-6 wiring. In addition, testing shall satisfy all proposed amendments to the existing ISO/IEC requirements. The wiring shall support all specified communication protocols. Testing shall support the Augmented Category-6 requirements by the EIA/TIA.

5.31 Upon completion of testing cable links for both copper and fiber optic cabling, the Contractor shall supply a copy of the original database files downloaded from the tester in original format on a USB Flash Drive. Contractor shall provide with the testing database files, an original copy of the tester's manufacturer software program (included in original cost) for record management and archiving, in a Windows format (i.e., Fluke Linkware software program).

5.31.1 The manufacturer's software program will be used by the Project Engineer to review all test results, and then turned over to the District to keep as their record copy with the final approved test results. Provide (3) copies of tests on USB Flash Drives. Do not submit test results for review in Excel or PDF file formats, as the submittal will be rejected and not reviewed.

5.32 Contractor will repair or replace cable runs or connecting hardware that do not meet specified criteria.

5.33 Upon completion of submittal of original test results, and after review and approval of those results, the Contractor shall provide testing equipment and personnel to randomly re-test 10% or 20 drops minimum, whichever is greater, of all UTP cable locations on the campus in the presence of the designated District Representative and Project Engineer. The District Representative shall choose which cables are to be re-tested. If 10% of the re-tested cables fail to match the previously submitted original tests, the Contractor must hire an independent testing firm to re-test all UTP cable on the campus, at no cost the customer. All cables which do not meet the specifications criteria as determined by the independent test report, shall be replaced and re-tested by the Contractor at no cost the District. Final sign-off of the testing shall be approved after receipt of all other documentation.

5.34 Multimode fiber optic cables shall be tested bi-directionally at 850nm and 1300nm. Single mode fiber optic cable shall be tested bi-directionally at 1310nm and 1500nm. All fiber strands shall be tested with an OTDR (Optical Time Domain Reflectometer). All fiber test results shall contain final source and destination information that matches IDF or MDF labeling shown on the fiber optic patch panels and final documentation. OTDR tests results shall be included with the copper test results and submitted with the

tester's software for review. Do not submit test results for review in Excel or PDF file formats, as the submittal will be rejected and not reviewed.

5.35 Test procedures shall comply with EIA/TIA 526-14 Method B. Test results shall meet the minimum following criteria:

5.35.1 Fiber optic test results shall not exceed 2db total attenuation loss in addition to inherent loss published by manufacturer tested at minimum 2000 Mhx for 805nm and 500 Mhz for 1300nm for the fiber optic cable.

5.35.2 Test all data cable minimum Category-6 UTP cable to test results for "Channel Testing" requirements @ 250 Mhz per current EIA/TIA requirements. Any cables which do not meet these minimum requirements shall be replaced or repaired at no cost the District.

5.35.3 Test all data cables minimum Augmented Category-6 UTP cable to test results for "Channel Testing" @ 500 Mhz per current EIA/TIA requirements. Any cables which do not meet these minimum requirements shall be replaced or repaired at no cost the District.

5.36 End to end attenuation testing shall be performed with a temporary test jumper cable at each end of the installed fiber cable. The test jumper utilized shall be the same fiber core size and grade of glass as the installed cable. The measured attenuation of the test jumpers, test connectors, and test interconnection sleeve between the two test jumpers shall be less than 1dB as calibrated at the time of the test at indicated wave lengths and frequencies. Test jumpers shall be "zeroed out" before testing of fiber stands begins.

5.37 Final As-Built Drawing Submittals – Provide (1) Electronic copy on USB Flash Drive of "E-size" As-Built drawings in AutoCad (2021 or newer version) format and (2) 30"X42" size Hard Copy of the As-Built Drawings. A Hand marked-up copy of the original construction drawings will not be accepted as the final As-Built drawing submittal. Final As-Builts shall include copies of the floor plan drawings of each building, detailed elevations of each MDF or IDF locating all equipment, quantities outlets and speaker locations, locations of all sleeves and identification of all final cable routes. In addition, the drawings shall include all outlet locations with cable identification numbers.

END OF SECTION

SECTION 27 20 00
INTEGRATED AUDIO/VISUAL SYSTEM

PART 1 – GENERAL

SUMMARY

1.1 The Contractor shall furnish all labor, project management, materials, tools, equipment, and resources necessary for the installation, startup, and testing of the system shown on the plans and described in the specifications.

1.2 Related Specification Sections:

1.2.1 Section 26 01 00 -General Provisions

1.2.2 Section 26 05 33 -Conduit and Fitting

1.2.3 Section 26 05 19 -Power Conductors

1.2.4 Section 26 05 34 -Outlet and Junction Boxes

1.3 The Contractor shall furnish and install the system as defined by the plans and specifications. The Contractor must demonstrate to the Owner that the system is complete and complies with all operational requirements set forth in the plans and specifications.

1.4 The work covered under this section of the specifications consists of furnishing all labor, equipment, supplies and materials, and in performing all operations necessary for the turnkey and fully completed installation of an audio/ video system in accordance with the specifications and accompanying drawings, except as specifically noted otherwise.

1.5 Cables for the system shall be pulled through the conduit systems furnished by the building Contractor. The 27 20 00 Contractor shall be responsible for providing all cables required and for coordinating and supervising the cable installation. The 27 20 00 Contractor shall be responsible for ensuring the integrity of the cables before and after installation.

1.6 Work Excluded:

1.6.1 Excluded from this work shall be any and all general construction services regarding masonry and general carpentry services. Those services are to be provided and installed by the general Contractor.

1.6.2 Conduit/raceways, sleeves, cable trays, electrical boxes, hand holes, pullboxes, etc. required for the system shall be furnished and installed by the Electrical Contractor. The conduit/raceways and electrical boxes furnished and installed under Electrical Contractor shall conform with the requirements of the drawings and specifications for the system.

1.7 In order to ensure project cohesion a single point of contact is required to provide a "TURNKEY" solution. The work covered under this section of the specification consists of furnishing all labor; cabling; equipment; software; supplies; materials and training. The Contractor will perform all operations necessary for the "TURNKEY" and fully completed installation in accordance with the specifications herein. As such, the successful Contractor must be factory trained on all aspects of system hardware. The successful Contractor shall be a California licensed C7 or 10 premise wiring Contractor as defined in this specification. SubContractors may not be utilized in the implementation of the plant wiring installation.

1.8 Approval to bid shall not release the Contractor from full specification compliance requirements. Final system acceptance testing shall govern final system acceptance and compliance with the specifications.

1.9 Failure to provide a functional equivalent shall result in the removal of the alternate system at the Contractor's expense.

1.10 These specifications contain statements which may be more definitive or more restrictive than those contained in the General Conditions. Where these statements occur, they shall take precedence over the General Conditions.

1.11 Where the words 'provide' or 'provision' is used, it shall be definitely interpreted as 'furnishing and installing complete in operating condition'. Where the words 'as indicated' or 'as shown' are used, it shall mean as shown on contract drawings.

1.12 Where items are specified in the singular, this division shall provide the quantity as shown on drawings plus any spares or extras mentioned on drawings or specifications. All specified and supplied equipment shall be new.

DEFINITIONS

1.13 Concealed: Hidden from sight, as in trenches, chases, hollow construction, or above furred spaces, hung ceilings - acoustical or plastic type, or exposed to view only in tunnels, attics, shafts, crawl spaces, unfinished spaces, or other areas solely for maintenance and repair.

1.14 Exposed, Non-Concealed, Unfinished Space: A room or space that is ordinarily accessible only to building maintenance personnel, a room noted on the 'finish schedule' with exposed and unpainted construction for walls, floors, or ceilings or specifically mentioned as 'unfinished'.

1.15 Finish Space: Any space ordinarily visible, including exterior areas.

Contractor Qualifications

1.16 The successful bidder shall be a California licensed C7 or C10 premise wiring Contractor as defined in this specification. Subcontractors may not be utilized in the implementation of the installation or programming.

1.17 The successful bidder shall have current full-time employees with CTS, Extron XTP Systems Engineer, Extron TLP programming certifications, and Extron Global Configuration Certification. (include certifications with submittals).

1.18 The successful bidder shall have installation staff with CTS-I certification and Extron Advanced A/V Certifications. Contractor must have a minimum of (8) full time certified installation technicians with Extron Certifications (include certifications with submittals).

1.19 All bidders must provide a listing of two similar size projects having the same scope of work using the proposed information delivery equipment. This listing shall be complete with facility names, completion dates, names of contacts, and their telephone numbers. Referenced projects must have been completed in the past 18 months.

1.20 The bidder shall have a factory trained service department the service department shall be on call 24 hours a day, 365 days a year, to arrive and initiate onsite service the specified equipment upon (24) hours notice.

1.21 The Contractor shall employ factory-trained technical/service personnel for service and maintenance of the system. Their résumés will be required. The factory-trained technical/service personnel shall have a minimum of two years experience installing the proposed system. The Bidder shall submit the names and copies of the certificates issued by the factory. The bidder shall instruct the Owner's technical personnel in the operation, care, and maintenance of the system.

CODE COMPLIANCE

1.22 All material and equipment shall be clearly listed, labeled, or certified by Underwriters Laboratories, Inc. All power supplies and computers shall be clearly UL Listed. Any system which is not UL Listed at time of bid will be rejected.

1.23 All acceptable systems shall be approved under Part 15, Subpart B, Section 15.107b of the FCC Rules and Regulations. Bidders must provide the FCC Registration Number of the proposed system. Systems that are not in compliance with the FCC will not be considered. Any system that is not FCC compliant at time of bid will be rejected. All equipment must be clearly labeled with FCC compliance stickers.

1.24 The system shall be installed in accordance with local and national electrical codes.

1.25 The manufacturer and Contractor shall provide the Owner with a release for use of all copyright materials, corporate logos, and corporate trademarks at time of bid.

SUBMITTALS

1.26 General Submittal Requirements

1.26.1 Phase I Submittal shall be made in electronic format within (20) working days after the award of the contract by the District. This submittal shall include the following:

1.26.2 Complete Bill of Materials in Excel Spreadsheet format with bills of quantities, including all materials, components, devices, and equipment required for the work. The bills of quantities shall be tabulated respective of each and every system as specified, and shall contain the following information for each Section listed:

1.26.3 Description and quantity of each product.

1.26.4 Manufacturer's Name and Model Number.

1.26.5 Manufacturer's Specification Sheet or Cut Sheet. Material Cut Sheets shall provide detailed product information and shall be original manufacturer product bulletins. Copies of material information from vendor websites shall not be considered equal and will not be excepted.

1.26.6 Material Cut Sheet part number provided shall be highlighted or provided with an arrow directed at the corresponding part number.

1.26.7 Specification Item Number referenced for each required product or if not shown in the specifications, Drawing Detail Number being referenced. (ie; Spec. 271000 Item 2.1 or DWG E4.15/#1)

1.26.8 Include with submittals all warranty information and a description of support and maintenance services to be provided. Also include all licenses and maintenance agreements required for continued operation of the equipment.

1.27 Phase II Submittal shall be provided within (20) working days after the approval of the Phase I submittals and prior to any fabrication or field conduit installations. All shop drawings shall be engineered in a CAD Software. Submission shall include electronic print copies to match the contract drawings, and Phase II submittals drawings shall include the following.

1.27.1 MDF and IDF equipment rack or cabinet elevations will be required to be provided including cable routing, grounding, support, UPS, network electronics, etc. and position of all components in the rack or cabinet.

1.27.2 Provide labeling plan which identifies the proposed scheme for identifying all components including Racks, patch panels (fiber and copper), site distribution feed cables, horizontal station cables and site conduit systems (handholes, pullboxes, etc.).

1.28 Common submittal mistakes which will result in submittals being rejected:

1.28.1 Not including the qualifications of the installing Contractor Company and Contractor’s Staff.

1.28.2 Not including all items listed in the above itemized description.

1.28.3 Including catalog cut sheets which have several items on a page, and not clearly identifying by highlighting, underlining or clouding the items to be reviewed (provided for the project) or crossing out the items which are not applicable.

1.28.4 Not including actual manufacturer's cut sheets or catalog information of proposed products.

1.28.5 Do not provide website sales pages instead of Material Cut Sheets. Printing the entire web page with advertising and non-applicable items or information will not be acceptable.

1.28.6 Do not include multiple manufacturers for similar products and do not indicate "or approved equal" or "to be determined later" statements. The products being submitted must be the products installed.

1.29 Component Samples and Mock-ups

1.29.1 Provide one full size installation sample mock-up of a normal wall faceplate for approval. All samples are to be fully labeled per these specifications. Samples are to be delivered to the Construction Manager's office on site prior to installation.

1.29.2 All sample mock-ups are intended to represent the components that are to be installed as part of this project. They are to be provided with all associated components and labeling necessary to make up a complete mock-up. Installation shall not proceed until the Owner's Representative has approved the samples. Once samples and other documents have been submitted and inspected by the Owners Representative approved, they shall be retained. Any installation that does not meet this standard shall be replaced or re-worked as approved by the Owners' Representative at no cost to the project.

1.30 The Contractor shall make a written request directly to Johnson Consulting Engineers for electronic drawing files (CAD). As a part of the written request, please include the following information:

1.30.1 Clearly indicate Project Name and Client, Johnson Consulting Job Number (located in bottom left corner of JCE Engineering Stamp) and each drawing Sheet Number required (i.e., E1.1, E2.1, E4.1 etc.).

1.30.2 Identify the name, Company, Title, phone number, mailing address and e-mail address of the person to receive the files.

1.30.3 Detail or Riser diagram sheets, System Schematic drawings or any other drawings other than floor plans or site plans, will not be made available to the Contractor.

1.30.4 Files will only be provided in the AutoCAD format in which they were created (i.e., version 2015 or version 2016). Files will not be made available in REVIT format.

1.31 Requests for files will be processed as soon as possible; a minimum of (7) working days should be the normal processing time. The Contractor shall be completely responsible for requesting the files in time for their use and delays in requesting files will not alleviate the Contractor from submitting required documents within the required timeline.

1.32 Contractor shall be responsible for the complete provision and installation of all components as specified herein. The Contractor shall provide all tools, equipment, fixtures, appliances, ancillary piece parts and hardware as necessary to complete the assembly and installation as requested. The Owner's Representative may conduct scheduled or unscheduled inspections of the Contractor's work at any time during construction. All work included in the scope assigned to the Contractor that is associated with this project shall be accomplished in a workmanlike manner, installed and assembled plumb, level and square. The product shall be delivered to the Owner finished complete, and ready to operate according to the manufacturer's specifications.

1.33 All installation work shall be completed to the standard of the samples approved by the Owner's Representative during the submittal process. Any products not installed to the quality detailed in these specifications and approved in the submittal process shall be reworked by the Installer to the satisfaction of the Owners Representative at no additional cost to the Owner.

1.34 Products as manufactured by "Extron" have been specified to coordinate with an existing facility and other contracts to be issued for this project. Alternate products will not be approved.

SEISMIC ANCHORING

1.35 All sound systems, A/V equipment or enclosures shall be anchored to the structure. Where details have not been provided on the drawings, anchorage shall comply with CBC Section 1617A.1.24. The Contractor shall submit drawings signed by the Contractor's registered structural engineer indicating method of compliance prior installation.

CLEANUP

1.36 In addition to cleanup specified under other sections, thoroughly clean all parts of the equipment. Where exposed parts are to be painted, thoroughly clean off any spattered construction materials and remove all oil and grease spots. Wipe the surface carefully and scrape out all cracks and corners.

1.37 Use steel brushes on exposed metal work to carefully remove rust, etc., and leave smooth and clean.

1.38 During the progress of the work, keep the premises clean and free of debris.

GENERAL COORDINATION

1.39 The A/V drawings may reference components by manufacturer which conflict with the written specification requirements, where this occurs the written specifications shall be followed.

1.40 All LED Projectors shall be commercial grade and shall be provided with a minimum three (3) year manufacturer warranty. Consumer grade projectors will not be acceptable as an alternate.

1.41 Projectors are Contractor furnished and installed, unless otherwise noted .

1.42 Contractor shall provide a spreadsheet for the District provided asset tags for all newly installed AV equipment. Contractor shall provide the populated tag list at the end of the projector as part of their turn-over documents.

1.43 Contractor shall coordinate assignment of ALL installed IP addressable equipment. The District will provide a list of available IP addresses based of Contractors device count. Contractor shall provide a spreadsheet containing the IP and MAC addresses as well as each particular device location. This list shall also contain the Switch Port Number, and Label Description.

1.44 See the example below:

Room #	Device	IP (Static)	MAC	WallJack Label	Switch #	Switch Port		IDF# Switch # - (From top to bottom - 1,2,3, ...- use A,B,C.. in label) Switch Port - (1 - 48)
2014	*Extron*	*10.63.155.159*	*0000.0322.a32b*	*A1-A04*	*1*	*4*	Example	IDF A1 -- Top Switch (A) -- Port 4
123	*Extron*	*10.63.155.152*	*0000.0322.aabb*	*C1-B24*	*2*	*24*	Example	IDF C1 -- 2nd Switch down In stack (B) -- Port 24
2201	*Cisco AP*	*dhcp*	*0012.aaaa.12ab*	*A2-C35*	*3*	*35*	Example	IDF A2 -- 3rd Switch down in stack (C) -- Port 35
2202	*<device>*	*dhcp*	*0012.aa4a.12ab*	*A2-C36*	*3*	*36*	Example	IDF A2 -- 3rd Switch down in stack (C) -- Port 36

PART 2 — PRODUCTS

Standard Classroom Audio-Video Requirements:

2.1 Contractor shall furnish and install all Audio-Visual system components as shown in the A/V system details and these specifications. Refer to the Audio-Visual System Diagram for additional information. The drawing details and specifications shall be considered as one overall document. Contractor shall provide system as a complete turn-key operational Audio-Visual systems.

2.2 Provide installation of Laser-Based Projectors, Projector Mounts, all audio/video system components and all local wiring and shown on the drawings and in the specifications. Projector Mounts shall be located and installed per the drawings and specifications.

2.3 AppleTV Interface Device, Document Camera, Laptop and PC Computers shall be furnished by the District and installed by the District.

2.4 Each Classroom AV System shall have a Contractor furnished and installed Ceiling Mounted Laser Projector at the location shown on the floor plans. The Projector shall serve at the presentation location within the classroom for all video. The Projector will be connected to the Classroom AV Switch in the Ceiling Mounted AV Enclosure. All audio will be routed to the system Speakers via the Audio Volume Control.

2.5 Provide Extron Global Configurator Plus and Global Configurator Professional software to be used to program all system components and all of the different types of systems installations. The Contractor shall include programming of all assets in each room system and the entire school site controls into the software from the central server location. The programming shall include assigning IP addresses, coordinate all IP addresses with the District IT Department.

2.6 **Provide lump sum of $3,700 Each for the purchase of (4) Full HD WUXGA Laser Projectors for the Relocatable Classrooms with Manufacturer's Extended Service Contract Whole Unit Exchange, 1 year in addition to the Standard Warranty**. Lump sum amount shall cover the Laser Projector and Service Contract invoice costs only plus tax. Actual make and model of Laser Projectors will be determined prior to installation.

2.6.1 Lump sum amount shall cover Laser Projectors and Service Contract invoice cost only plus tax. Shipping, Contractor mark-up, profit and overhead, installation, patch cables, programming and set-up, all mounting hardware and labor costs shall be included as part of the Contractor bid and not part of the lump sum amount. Actual make, model and final size of Laser Projectors will be determined prior to installation and shall be approved by the Project Engineer and District Project Manager prior to purchase.

2.6.2 Contractor shall submit an itemized spreadsheet to the Project Engineer, Architect, Construction Manager and District Project Manager for the monitors being proposed for purchase including the following information; Make, Model, Lumen Output, Native Resolution, Invoice Cost and Tax. The submittal shall include manufacturer cut sheets for each type and model submitted, with proper part numbers highlighted. The itemized spreadsheet shall detail each location with Room Number and the associated Laser Projector for that room. The spreadsheet shall be provided to the Construction Team a minimum of 20 weeks prior to the first proposed purchase date to allow enough time for approval, purchase and delivery of the Laser Projectors. The Contractor shall not proceed with purchase or warehousing of the equipment without written approval.

2.6.3 Laser Projector specifications based on Epson PowerLite L530U Commercial Grade Projectors. Any suggested Laser Projector equivalent must contain all input/output connections; shall provide as good or better minimum brightness, contrast ratio, native resolution and maximum display colors as

the specified Laser Projector. Models not currently in production (discontinued) at the time of the submittal, will not be considered. Laser Projectors must have a minimum of (2) HDMI and (2) Audio Inputs, RS-232 Control Port and (1) 3.5mm Audio Output.

2.6.4 All Laser Projectors shall be commercial grade and shall be provided with a **minimum Three (3) year manufacturer warranty** Plus Manufacturer's Extended Service Contract. Consumer grade Projectors will not be acceptable as an alternate.

2.7 Each Classroom AV System shall be furnished with a Projector at the front of the classroom in the location shown on the floor plans. The Projectors shall serve at the presentation location within the classroom for all audio and video. All audio will be routed to the system speakers.

2.8 Provide installation of projectors with audio/video components and all local wiring. Projectors shall be located per the drawings and specifications.

2.8.1 Projectors shall be furnished and installed by the Contractor. Coordinate exact model or manufacturer to be used to insure compatibility with A/V system drawings. Digital projectors must be able to fill, per the manufacturer's recommended image size at 100% of all projector performance capabilities, a 94" diagonal screen (16:9 aspect ratio) (Approx. Size for Projection Screen Area). Throw distance shall not exceed 14'0"" from the surface of the Projection Screen. Projectors shall be the non-interactive type.

2.8.2 Coordinate with the General Contractor, Ceiling Contractor, Fire Alarm System Contractor, Security System Contractor, HVAC Contractor and Electrical Contractor for the location of the Projector and Speakers on the Accessible Ceiling. The location of the Projector and alignment with the screen is critical for proper operation. This projector does not have a high degree of Horizontal and Vertical Image Adjustment capability.

2.8.3 Special Set-Up and Testing Requirements - Contractor shall provide installation of the specified projectors, so that the image shall fit the designated image area and aspect ratio, without the use of the keystone (0% keystone requirement), image shift (Vertical and Horizontal) and zoom functions, or modification of the calibration settings. The image shall not be artificially manipulated to allow the image to fit the Projection Screen due to the placement of the projector mount or projector.

2.8.4 Projector must be installed level. The projector may not be tilted to achieve the proper image area throw coverage on the screen or use manual shift/keystone functions on the projector to compensate for the distortion caused by the projector being tilted. The Contractor must use the correct length pole on the mount to achieve the proper image throw, regardless of the pole provided with the ceiling mount kit. Contractor shall be responsible

for determining the correct length 1-/2” NPT pole prior to installation of the projector.

2.9 Contractor shall furnish and install the ceiling mounted projector support. Provide Peerless Model CMJ455 ceiling mount projector support, 1.5” NPT threaded support pole with cable access hole, white color, by Chief Mounts Model #PWH-XXW (XX-Represents Length as required) and Chief Mounts Model #RPAUW low profile universal projector mount. All mounting systems shall be provided with vandal resistant hardware. Pole lengths will vary, based on drop and throw requirements for each projector. See detail drawings for additional requirements.

2.9.1 Projector mounting plate shall be securely mounted to adhere with structural requirements for earthquake compliance. Contractor shall provide all hardware including anchoring systems, support brackets and modifications to the ceiling. Contractor shall submit proposed mounting modifications to the Project Engineer prior to installation of the projector.

2.10 Provide Manual Projection Screen, Wall Mounted at the Front of the Room above the Markerboard, where shown on the drawings. Contractor shall provide all hardware including, but not limited to, support systems and brackets per detail drawings. Detail drawings are intended to provide a minimum requirement for structural support and are to be used as a guideline. The Contractor shall be responsible for final installation of the projection screen structural support that shall meet at least the minimum requirements shown in the details. Contractor shall submit the installation details to the Project Engineer for approval prior to installation.

2.10.1 Coordinate the Screen Case location with the installation of the projector and the HVAC Duct work provided by the Mechanical Contractor. Screen Case shall be mounted to allow for the projector to be mounted with the proper image drop of the screen’s usable image area or with a drop as recommended by the manufacturer’s throw calculator. Screen must be aligned with projector to create the proper image size and orientation.

2.10.2 Mount screen to the structural members on the Interior of the Wall. Refer to the Architectural Drawings for locations of structural studs. Contractor to field verify the exact conditions prior to installation of the screen. The Contractor must work around any existing obstructions on the Wall.

2.10.3 Draper Model “Acumen M Series” Projection Screen – 50” High by 80” Wide by 94” Diagonal at 16:10 Aspect Ratio loaded with front projection screen surface by Draper Model “XT1000E Matt White” with a 1.0 Gain. (or approved equal).

2.10.4 Provide Minimum requirement for Blackout Drop at the top of the Screen. Screen shall be mounted with top of screen case 6” below the accessible ceiling.

2.11 Provide OWI Page Interrupter Module Model #AMP-POP1 on the Amplified Ceiling Speaker from the ceiling mounted Page Speaker each Classroom to allow for clipping of

the audio when the school's intercom paging system is activated. Contractor will be required to run a cable to the nearest Analog Intercom Speaker location to pick up the paging device's page announcements. Attach sensor per manufacturer's instructions. Do not route to an Exterior Horn, as these are on a different zone.

2.12 Contractor shall furnish system components as shown in the A/V System Diagram, detail drawings and specifications. Coordinate with the District's IT Department for installation of cabling between the Projector and the peripherals. Provide a Direct-Connect HDMI Audio-Visual System with (1) HDMI Input Wallplate, (1) HDMI Input from the Owner Furnished AppleTV and (2) Ceiling Mounted Speakers in each Classroom. Refer to detail drawings for exact installation configuration and required parts. All Classrooms shall also have a Wall Mounted Audio Volume Control for the Speaker Output.

2.13 Teacher's interface Wallplates; Each classroom shall be furnished with (1) Single HDMI Input wallplate location as well as a Stand-Alone ALS 3.5mm mixed Audio Output for the ADA Assistive Listening System connected to a Portable ADA ALS Transmitter as needed. The Teacher's Wallplate location shall also be provided with a Dual Port Data outlet by the 27 10 00 Contractor. The Teacher's PC will serve as the Main Audio-Visual interconnection device to the system. Provide all local cabling and patch cables for the system. See Classroom A/V System Diagram for Input Wallplate and other Audio-Visual System component requirements. Provide the following interface at the Teacher's wallplate;

2.13.1 Provide (1) HDMI Digital Input Wallplate at the Teacher's Interface (LO) location where shown on the drawings; Wallplate shall be provided with (1) HDMI Input in a Single-Gang Decora Faceplate. The Teacher's Wallplate shall be provided with (1) HDMI Input to the Laser Projector. Provide (1) Extron #WPD-110A HDMI Decora Style wallplate.

2.13.1.1 Provide a Fiber-Hybrid HDMI Cable Assembly for Installation Connection from the HDMI Input Wallplate to the HDMI Input Port #1 on the Laser Projector. Contractor shall securely store any slack on the cable in the accessible ceiling above the Projector. Fiber-Hybrid HDMI Cable Assemblies may not be cut to length. Provide length as close to needed as possible. See Cable Assemblies List.

2.13.2 Provide (1) Stand-Alone Assistive Listening System Audio Output using the 3.5mm Audio Port on the WPD-110A HDMI Wallplate provided by the Contractor at the Teacher's location. Provide a balanced audio connection from the balanced audio output of the Amplified Ceiling Speaker.

2.13.2.1 Connect the balanced audio cable from the wallplate to the "Balanced Out" Port on the Amplified Ceiling Speaker. See A/V System Diagram for additional requirements.

2.13.2.2 Provide the balanced audio output from the Amplified Ceiling Speaker to the wallplate. Provide balanced audio cabling and terminate on solder terminals on the rear of the Extron WPD-110A HDMI wallplate.

2.13.2.3 Clearly label wallplate and cabling as “ADA ALS Output”.

2.13.2.4 See the Classroom A/V System Diagram in the Detail Drawings for additional requirements.

2.13.3 All Audio-Visual wall plates shall be the Extron Decora style. Color of plates is to be confirmed by the Contractor prior to installation. The wallplates require a dual gang box and faceplate. All wallplates shall be white in color, unless otherwise noted on the drawings.

2.13.4 All Data cabling at the Teacher’s locations shall be furnished and installed by the 27 10 00 Contractor.

2.13.5 Contractor shall furnish and install (1) 12-Foot HDMI Patch Cable and (1) 10-Foot 3.5mm Audio Patch Cable at the Main Teacher’s Interface wallplate in each room. All AV patch cables shall be factory manufactured. Contractor shall provide each cable at a length of 12-feet for the connections to the Teacher’s PC/Laptop from the Main Teacher’s wallplate. Provide Extron HDMI Ultra Series high speed patch cables or approved equal. See AV Patch Cables Section for requirements.

2.13.6 Data Patch Cables shall be furnished and installed by the 27 10 00 Contractor.

2.14 Provide OWI Model #AMPSTVCW Wall Volume Control designated as (LC) symbol on the drawings. Refer to the

2.14.1 Volume Control Input shall be connected to the Line Level Audio Output from the Laser Projector. Provide a Line Level Audio cable from the Projector to the Volume Control Panel.

2.14.2 Provide a Balanced Audio Cable connection from Volume Control to the Balanced Audio Input on the Amplified Ceiling Speaker. Refer to the Classroom A/V System Diagram for additional requirements.

2.15 Contractor shall furnish and install (1) High-Speed HDMI Patch Cable from the Projector’s HDMI Input #2 to the District furnished and installed AppleTV Device. Coordinate location of AppleTV with District IT Department. All HDMI patch cables shall be factory manufactured. Contractor shall provide length of cable as required to make the connection from the Projector to the AppleTV Device. Provide Extron HDMI Ultra Series high speed patch cables (or approved equal).

2.15.1 Provide (1) Category-6 UTP Patch Cable (Length as Required) from the data outlet at the Projector location to the AppleTV Device installed by the District.

2.16 Provide Self-Amplified Two-Input Speaker Package for the Classroom AV System as manufactured by OWI #2X2VG-HDTR62 (No Approved Equal) with Built-In Amplifier in each Classroom shown on the Floor Plans. Self-Amplified Speaker Package shall be provided with the following;

2.16.1 6.5" 2-Way Speaker with Drop-In Tile Type Full 2'X2' Grill, 40W 8-Ohm Amplifier, 2-Source Inputs (Balanced Line Level, 3.5mm Stereo and Proprietary RJ45), Balanced Audio Output, Proprietary RJ45 Audio Output, (3) Speaker Outputs, and 25/70V Transformer Power Supply. Page Interrupter shall be provided separately and is not provided with the Self-Amplified Speaker Package.

2.16.2 The Self-Amplified Two-Input 6.5" Two-Way Speaker shall serve as the Main Audio Source/Controller for the Classroom AV System. Contractor shall furnish and install all cabling and components associated with the Speaker System shown on the Classroom AV System Diagram and in these specifications. Volume Control for the Speaker System shall be provided by the Optional Wall Mounted Volume Control.

2.16.3 Provide OWI #AMPPOP1 Priority Page Module Interrupter/Controller at Main Speaker location for muting of the AV System Speakers when the Classroom receives a page notification on the Campus Intercom system. Priority Page Module shall be wired from Priority Page Module to the Analog Paging Speaker in the Classroom. Connect to the audio contact closure for page shunting of local audio.

2.16.4 Provide (1) OWI #2X2VG-IC6NA 8-Ohm 6.5" Coaxial Non-Amplified Speaker with Drop-In Tile Type Full 2'X2' Grill Secondary Speaker for the Classroom AV System. Install Speaker where shown on the floor plans. This Speaker is part of the Speaker Package.

2.16.5 Audio-Visual System Speakers symbols shown on the floor plans do not differentiate which Speaker is the Self-Amplified Two-Input Speaker and which Speaker is the Non-Amplified Secondary Speaker. Contractor shall determine the locations of each type of Speakers in the field.

2.16.6 Speakers shall be positioned to provide the maximum coverage for the Classroom or Designated Room space. Coordinate placement of the speakers with the Architectural, Mechanical and Electrical drawings to avoid lighting, HVAC and fire alarm devices. Color shall be white. Volume shall be set by contractor and controlled via the Projector Remote Control and Input Source audio controls.

2.16.7 Self-Amplified Two-Input Speaker shall be provided with Master Volume, Bass, Treble, Gain, Priority Page/Trigger Level and Speaker/Line Level Controls.

2.16.8 Provide OWI 2X2 Suspended Ceiling Plate and Speaker Back-can for the Speakers. Contractor shall provide structural support for the Speakers as shown in the Detail Drawings.

2.16.9 Provide Self-Amplified Speaker power supply shall be plugged into the electrical outlet located at the Projector. Provide a 2-Conductor cable from the 15VDC Power Supply to the Self-Amplified Speaker. Connect the cable to the power input terminals on the Main Circuit Board.

2.16.10 Speakers shall be provided with a minimum 18AWG speaker Cable from the Amplified Speaker to the Non-Amplified Speaker.

2.16.11 Speakers shall be provided with seismic cable attached to the roof structure above. Refer to the drawing details for the installation requirements.

2.16.12 Each Speaker shall be connected to a separate channel on the AV Switch Amplifier Output @8-Ohms.

Portable ADA Assistive Listening System

2.17 The Assisted Listening System shall be furnished and installed to meet CBC Section 11B-219 and comply with CBC Section 11B-706 and the ADA requirements for hard-of-hearing. Contractor shall furnish (2) Portable ADA Assistive Listening Systems Kit that may be used for Classrooms.

2.17.1 Per ADA Assistive Listening System CBC Section 11B-219.3 – "The minimum number of receivers to be provided shall be equal to 4% of the total number of seats, but in no case less than two. 25% minimum of receivers provided, but no fewer than two, shall be hearing aid compatible."

2.17.2 The CVUSD has determined that a portable ADA Assistive Listening System shall be provided for the installed Classroom Audio-Visual Systems. Contractor shall provide the ADA Systems as shown in the project specifications.

2.17.3 Provide for each Kit; A self-contained portable wireless FM transmitter and receivers inside a self-contained carrying case. Portable ADA Assistive Listening system shall be as manufactured by Williams Sound Corporation, Phone 1-800-843-3544. Provide self-contained FM based system Model #FM ADA Kit 37 RCH with rechargeable batteries.

2.17.3.1 Kit Contains; (1) PPA T46 transmitter, (4) PPA R37 receivers, (4) HED 027 headphones, (1) MIC 090 Mini Lavalier microphone, (1) MIC 049 conference microphone, (1) CCS 029 carrying case, (1) NKL 001 neck loop receiver, (1) ADA wall plaque and (5) BAT 026-2 "AA" batteries

Training

2.18 Portable Equipment shall be furnished and spares supplied to the designated representative of the Client, along with complete documentation of the materials provided. Where applicable, deliver portable equipment in the original manufacturer's supplied packaging.

2.19 **Contractor will provide a minimum of 2 clock hours of on-site training for site staff on the Classroom A/V systems**. Training for personnel shall be provided by certified technology specialists. The scope of training shall encompass system operation and procedures. Technician training should include an integrated information overview, media retrieval procedures as well as operation procedures for local control configurations. The contractor shall provide a detailed written outline clearly describing the proposed plan for all training, for approval by the Engineer and Owner's representative.

2.19.1 Training for staff will include basic system concepts. Faculty and staff will need to know how to power on/off the system, and how to access one or more media resources via remote control. Training should include use and operation of audio/video devices and techniques and trouble-shooting tips. Trainers should incorporate hands-on techniques to maximize staff opportunity to incorporate and develop curriculum that is both meaningful and targeted for their student needs. Clearly written support materials should be provided to all training participants. Manual describing operation and use of the system shall also be provided.

Audio/Video Patch Cables

2.20 All patch cables must be factory manufactured. Cables may not be field modified or altered. Length of cable shall be as required by the specification section. If length is not specified, the cables shall be the nearest factory manufactured length above the minimum distance required.

2.20.1 Audio Cable Assemblies 25-feet in length or less; All 3.5mm stereo audio cable assemblies shall be a male-to-male cable fully shielded cable with 3.5mm bayonet style connectors. Extron Mini Audio Cables Series or equal. Provide minimum length of 6 feet.

2.20.2 High Speed HDMI Patch Cables 3-feet in length; All HDMI patch cables must be Full 18-Gig HDMI 2.0 4K@60Hz and HDR Certified and must conform to the HDMI 4K Premium High Speed cable standards. Patch cable shall be Liberty AV Nebula Series #NEBULA-H01M (or approved equal by Extron HDMI Ultra Series).

2.20.3 High Speed HDMI Patch Cables with 90º Connector 3-feet to 6-feet in length; All HDMI patch cables must be Full 18-Gig HDMI 2.0 4K@60Hz and HDR Certified and must conform to the HDMI 4K Premium High Speed cable standards. Patch cables shall have one HDMI end provided with a 90º Connector for the Wallplate connection behind the Flat Panel. Patch cables shall be Kramer #C-HM/RAx (x=Length) (or approved equal by Liberty AV). Length of patch cable shall be as required for proper operation.

2.20.4 High Speed HDMI Patch Cables 6-feet to 24-feet in length; All HDMI patch cables must be Full 18-Gig HDMI 2.0 4K@60Hz and HDR Certified and must conform to the HDMI 4K Premium High Speed cable standards. Patch cables shall be Liberty AV Kinetic Series #HDPMMxx (xx=Length) (or approved equal by Extron HDMI Ultra Series). Length of patch cable shall be as required for proper operation.

2.20.5 Fiber-Hybrid HDMI Cable Assemblies 25-feet (Use 10M) to 66-feet (Use 20M) in length for Installation Connections; All HDMI patch cables must be 4K@60 4:4:4 2160p Full 24Gbps verified with ARC capability and must conform to the HDMI Premium and High Speed cable standards. HDMI cable assemblies shall be a fiber optic/copper hybrid construction with a minimum of (1) detachable end for pulling through conduit. Cables shall be Structured Cable Products 995AOC-XX (XX=Length) Active Optical 4K HDR HDMI Cable w/Detachable Ends (or Approved Equal). Length of patch cable shall be as required for proper operation up to 30-Meters (98-Feet).

2.20.5.1 HDMI cable assembly must be installed with the manufacturer furnished “cable pulling capsule”. Damaged or inoperable cable assemblies due to improper installation procedures shall be replaced by the Contractor at no expense to the District. Please note Manufacturer’s Cautionary Warning on product specification sheet – “DAMAGED DUE TO CONNECTOR BEING PULLED HARDER THAN 20 kg, IS NOT COVERED BY WARRANTY - To pull cable through conduits or tight spaces, never grab the connector, as it is easy to exceed the force limit on the connector, instead, remove the detachable end, protect the connector using a cable pulling sock and make sure the force is applied directly to the cable jacket.”

2.20.6 Category-6 Patch Cables 25-feet or Less; Category-6 UTP patch cables shall be as manufactured by Leviton or Ortronics, or approved equal. Patch cables shall be provided with standard patch cable material.

2.20.7 Category-6 Patch Cables 25-feet or More; Category-6 UTP patch cables shall be as manufactured by Leviton or Ortronics, or approved equal. All patch cables in excess of 25-feet must be constructed with solid conductor wire to comply with the crosstalk requirements of the Category-6 standards

2.20.8 XLR patch cables shall be as manufactured by Hosa Edge Series or approved equal.

2.20.9 All patch cables shall be provided for each type of connection required to provide a complete and operational system. All patch cables shall be factory manufactured.

PART 3 - INSTALLATION AND EXECUTION

3.1 Verify that all electrical requirements including junction boxes, empty conduit and power circuits and receptacles are in place as shown on the drawings.

3.2 Receive, check, unload, handle, store, and adequately protect equipment and materials to be installed as part of the contract. Store in areas as directed by the owner's representative. Include delivery, unloading, setting in place, fastening to walls, floors, ceilings, or other structures where required, interconnecting wiring of system components, equipment alignment and adjustment, and other related work whether or not expressly defined herein.

3.3 Installation practices shall follow “standard broadcast wiring” and installation practices, as excerpted from “Recommended Wiring Practices, “Sound System Engineering”, (2nd Edition) D. Davis, and Performed to the highest standards of acknowledged industry practices. Upon request the A/V Contractor shall furnish all equipment and labor to verify the compliance with the following:

Optical:

3.3.1 Center to corner light fall off shall be less than 50% for video/data projectors.

3.3.2 Center to corner light fall off shall be less than 35% for optical projectors.

3.3.3 Images shall be level and square with the appropriate aspect ratio.

3.3.4 Image shall be free from visible vibration.

Audio System:

3.3.5 Signal-to-noise ratio (including crosstalk): 55-dB minimum.

3.3.6 Total harmonic distortion: 0.1% maximum from 30 Hz to 15,000 Hz.

3.3.7 System frequency response: ±1.0 dB, 20 Hz to 20,000 Hz.

3.3.8 Program reproduction system with point-source loudspeakers: Flat response from 63 Hz to 2.5 kHz ± 2-dB, decreasing uniformly from a relative level of 0-dB at 2.5 kHz to a relative level of –10-dB at 10 kHz as measured on axis of loudspeaker.

3.3.9 Sound output capability: Program levels of not less than 100 dB without objectionable distortion, rattles, or buzzes.

3.3.10 Hum and noise is inaudible (below the background noise level of the space) under normal operation and as observed in normal seat locations.

Video System:

3.3.11 Signal-to-noise ratio (peak to RMS, unweighted DC to 4.2 MHz): 55-dB minimum.

3.3.12 Crosstalk (unweighted DC to 4.2 MHz): 45-dB minimum.

3.3.13 Frequency response: ± 0.5 dB to 4.2 Mhz.

3.3.14 Line and field tilt: 2% minimum.

3.3.15 Differential gain: 3% maximum.

3.3.16 Differential phase: 2□ maximum.

3.3.17 System timing sync coincidence: within 50 nanoseconds.

3.3.18 Color timing: ± 2□at 3.58 Mhz.

Radio Frequency (RF) System:

3.3.19 Visual Carrier level: +0 dBmV minimum and +16 dBmV maximum at system outlets for utilized channels.

3.3.20 Adjacent Channel Visual Carrier: 3-dB maximum differential at system outlets.

3.3.21 Non-adjacent Channel Visual Carrier: 0-dB maximum differential at system outlets.

3.3.22 Carrier-to-Noise Ratio: 42-dB minimum

3.3.23 Amplitude Response: Flat ± 1.0 Db

3.3.24 Signal-to-Noise Ratio: 45-dB minimum for the maximum level of the signal and the interference resulting from cross modulation from other signals on the system, after demodulation.

3.3.25 Outlet-to-Outlet Isolation: 25-dB minimum.

3.4 Adhere to manufacturer's published specifications for pulling tension, minimum bend radii, and sidewall pressure when installing cables.

3.5 Where manufacturer does not provide bending radius information, minimum bending radius shall be 10 times cable diameter. Arrange and mount equipment and materials in a manner acceptable to the engineer and the owner.

3.6 Attach cables to permanent structure with suitable attachments at intervals of 48 to 60 inches. Support cables installed above removable ceilings. Install adequate support structures for 10-foot cable service loops at each TC.

3.7 Provide lacing bars for cable management in all of the sound systems cabinets. Contractor shall be responsible for providing neatly dressed cable bundles within the sound cabinet. Cables shall be dressed separately for Microphone and line level cables, speaker and monitor cables, control cables and power cables and video cables. All cables shall be neatly labeled with wrap around type written labels.

3.7.1 On the cable at the rear of the patch panel or termination location. Requires the use of a self-laminating wrap around label. Brady Label self-laminating 1.2" by 1.5" wrap around label Part # 29689 (NO ACCEPTABLE EQUAL).

3.8 All faceplates shall be labeled with type-written permanent labels securely attached to the faceplates identifying all A/V connections. (ie; Doc Cam, PC, DVD, etc.) Cables at the projector and A/V switch shall be also be labeled to match the faceplates.

3.9 Furnish screw-type terminal blocks, boards, strips or connectors for cables that interface with racks, cabinets, consoles or equipment modules. Attach wires terminating at screw-type terminals with crimp-on lugs. "Telephone-style" punch down blocks are not acceptable for signal or data wiring.

3.10 Group cables according to signals being carried. To reduce signal contamination, form separate groups for the following:

3.10.1 Power cables.

3.10.2 Control cables.

3.10.3 Video cables.

3.10.4 Camera cables.

3.10.5 Audio cables for signals less than minus 20 dBm.

3.10.6 Audio cables for signals between minus 20 dBm and plus 30 dBm.

3.10.7 Audio cables for signals above plus 30 dBm.

3.10.8 Broadband RF cables.

3.11 Run power cables, control cables, and high-level cables on the left side of an equipment rack as viewed frm the back. Run other cables on the right side of an equipment rack.

3.12 Cut cables (except video, camera and RGBS cables, which must be cut to electrical length) to the length required by the run. All wire and cable shall be continuous and splice-free for the entire length of run. For equipment mounted in drawers or on slides, provide the interconnecting cables with a service loop of appropriate length.

3.13 Install no cable with a bend radius less than that recommended by the manufacturer.

3.14 Provide strain relief for cables. Provide connectors with metal shell/casings. Provide a minimum of three feet of free cable coiled in a floor pocket. Use spiral wrap to group similar cable types.

3.15 All shielded cables shall be insulated. Do not permit shields to contact conduit, raceway, boxes, panels, or equipment enclosures. Tin all terminated shield drain wires and insulate with heat-shrink tubing.

3.16 Land all field loudspeaker wiring entering each rack at terminal devices prior to connection to equipment or devices. Land loudspeaker level control cables at screw or tubular clamp type barrier blocks on the left side of the equipment rack as viewed from

the rear. Make all connections to screw-type barrier blocks with insulated crimp-on spade lugs. Size all lugs properly to assure low-resistance connections.

3.17 Separately dress, route and land microphone and line level cables directly to equipment.

3.18 Use only rosin core 60/40 tin/lead solder for all solder connections.

3.19 Lace, tie or harness wire or cable in accordance with accepted professional practice. Dress, lace or harness all wire and cable to prevent mechanical stress on electrical connections; no wire or cable shall be supported by a connection point. Provide service loops where harness of different classes cross or where hinged panels are to be interconnected.

3.20 Patch Panel Assignments: Wire patch panels so that signal “sources” (outputs from) appear on the upper row or a row pair and “loads” (input to) appear on the lower row of a row pair.

3.21 Patch Panel Designation Strips: Use alphanumeric identifications and descriptive information on patch panel designation strips. Number the jack positions in each horizontal row sequentially from left to right. Letter the horizontal jack rows sequentially from top to bottom. Include the alphanumeric identification of each jack on the functional block drawings, and on reproductions of these drawings that shall be mounted in an appropriate location near the patch bays.

3.22 Each major component of equipment shall have the manufacturer's name, address, model number, and rating on a plate securely affixed in a conspicuous place. NEMA code ratings, UL label, or other data which is die-stamped into the surface of the equipment shall be stamped in a location easily visible.

3.23 Upon completion of the work, remove all refuse and rubbish from and about the premises, and leave the relevant areas and equipment clean and in an operational state.

3.24 During the installation, and up to the date of final acceptance, protect finished and unfinished work against damage and loss. In the event of such damage or loss, replace or repair such work at no cost to the owner.

3.25 Prior to final acceptance, provide minimum of three complete sets of drawings showing all cable numbers and construction details in accordance with the actual system installation. Revise the device layout drawings to represent actual installation locations and coordinate these with the electrical Contractor. The operation manual shall contain all instructions necessary for the proper operation of the installed system and manufacturer’s instructions. The maintenance manual shall contain all information required for the "proof of performance" as required and all manufacturers’ maintenance information.

Inspection and Test upon Completion

3.26 Check out and final connections to the system shall be made by the Contractor of the products installed. Technicians shall demonstrate operation of the complete system and each major component to the Owner.

3.27 System field wiring diagrams shall be provided to the owner by the system Installer (Contractor) prior to completion of the installation.

3.28 All materials and installation shall be guaranteed to be free of defects in material and workmanship for two years after final acceptance of installation and test.

3.29 Upon completion of the installation, four (4) copies of complete operational instructions shall be furnished, complete with record drawings. Instructions shall include part numbers and names, addresses, and telephone numbers of parts source. Final payment shall not be made until operational and maintenance manuals have been received.

3.30 The Contractor shall be responsible to provide service within 24 hours (or by mutual consent) after notification by the Owner or his representative, within the hours of 8:00 AM to 5:00 PM from Monday through Friday. Service request forms shall be supplied by the Contractor and the faxing or mailing of such a request form shall constitute notification by the Owner of a service request.

3.31 The Contractor shall provide two "preventative maintenance" service calls, spaced six months apart, for cleaning of all source devices and overall inspection of the system.

PROJECT CLOSEOUT

3.32 Prior to completion of project, compile a complete equipment maintenance manual for all equipment supplied under sections of this division, in accordance with these specifications and as described below.

3.33 Equipment Lists and Maintenance Manuals:

3.33.1 Prior to completion of job, Contractor shall compile a complete equipment list and maintenance manuals. The equipment list shall include the following items for every piece of material equipment supplied under this section of the specifications:

3.33.1.1 Name, model, and manufacturer.

3.33.1.2 Complete parts drawings and lists.

3.33.1.3 Local supply for parts and replacement and telephone number.

3.33.1.4 All tags, inspection slips, instruction packages, etc., removed from equipment as shipped from the factory, properly identified as to the piece of equipment it was taken from.

3.34 Maintenance manuals shall be furnished for each applicable section of the specifications and shall be suitably bound with hard covers and shall include all available manufacturers' operating and maintenance instructions, together with "as-built" drawings to properly operate and maintain the equipment. The equipment lists and maintenance manuals shall be submitted in duplicate to the Architect for approval not less than 10 days prior to the completion of the job. The maintenance manuals shall also include the name, address, and phone numbers of all Subcontractors involved in any of the work specified herein. Four copies of the maintenance manuals bound in single volumes shall be provided.

RECORD DRAWINGS

3.35 The Contractor shall maintain record drawings as specified in accordance with these specifications, and as noted below.

3.36 Drawings shall show locations of all concealed and exposed conduit runs, giving the number and size of conduit wires. Underground ducts shall be shown with cross section elevations and shall be dimensioned in relation to permanent structures to indicate their exact location. Drawing changes shall not be identified only with referencing CORs and RFIs, the drawings shall reflect all the actual changes made.

3.37 Final As-Built Drawing Submittals - Provide (1) hard bound copy of "E-size" As-Built drawings and (3) copies on USB Flash Drive in AutoCAD (2021 or newer version) format. A Hand marked-up copy of the original construction drawings will not be accepted as the final As-Built drawing submittal. Final As-Builts shall include copies of the floor plan drawings of each building, detailed As-built AV Diagrams including wire and connection type, speaker locations, locations of all final cable routes, including conduits. In addition, the drawings shall include all outlet locations with cable identification label information.

END OF SECTION

SECTION 27 51 16
INTERCOM / CLOCK SYSTEM

PART 1 - GENERAL

1.1 The Contractor shall provide additional clocks and intercom components to the existing wireless clock and existing analog intercom system. Refer to the drawings, and as described in these specifications as may be required as specified herein.

1.2 The contractor shall provide loudspeakers and clocks as shown on the drawings or as noted in these specifications. Provide and connect all conductors and terminal strips in cabinets and backboards necessary to provide for the functions and the requirements specified herein.

1.3 Related Specification Sections:

1.3.1 Section 26 01 00 - General Provisions

1.3.2 Section 26 05 33 - Conduit and Fittings

1.3.3 Section 26 05 19 - Conductors

1.3.4 Section 26 05 34 - Outlet and Junction Boxes

1.4 **Existing Intercom System is Bogen MultiComm 2000. Contractor shall match existing Intercom System components**.

1.5 **Existing Wireless Clock System is Innovation Wireless. Contractor shall match existing Wireless Clock System components**.

Quality Assurance

1.6 All items of equipment including wire and cable shall be designed by the manufacturer to function as a complete system and shall be accompanied by the manufacturer's complete service notes and drawings detailing all interconnections. The distributor must also provide complete installation of all wiring and devices or equipment. All conduit and standard backboxes will be furnished and installed by the electrical contractor. Supervised installation of the wiring and intercom/clock devices shall be permitted with the following conditions:

1.6.1 The intercom/clock system shall be warranted by the manufacturer’s representative per the contract agreement.

1.7 The contractor shall be an established communications and electronics contractor that has had and currently maintains a locally run and operated business for at least five years. The contractor shall utilize a duly authorized distributor of the equipment supplied for this project location with full manufacturer's warranty privileges.

©JCE #26047

1.8 The contractor shall show satisfactory evidence, upon request, that the supplier maintains a fully equipped service organization capable of furnishing adequate inspection and service to the system. The supplier shall maintain at his facility the necessary spare parts in the proper proportion as recommended by the manufacturer to maintain and service the equipment being supplied.

1.9 UL Compliance: Comply with requirements of UL 50. The communication system supplied shall be listed by Underwriter's Laboratories under UL Standard 1459. A copy of the UL listing card for the proposed system shall be included with the contractor's submittal. The system shall also comply with PCC Part 68 Regulations.

1.10 Installation and start up of all systems shall be under the direct supervision of a local agency regularly engaged in installation, repair, and maintenance of such systems. The supplier shall be accredited by the proposed equipment manufacturers and be prepared to offer a service contract for system maintenance on completion of the guarantee period.

1.11 The agency providing equipment shall be responsible for providing all specified equipment and mentioned services for all equipment as specified herein. The agency must be a local authorized distributor of all specified equipment for single source of responsibility and shall provide documents proving such. The agency must provide written proof that the agency is adequately staffed with factory-trained technicians for all of the specified equipment. .

1.12 The contractor shall guarantee availability of local service by factory- trained personnel of all specified equipment from an authorized distributor of all equipment specified under this section. On-the-premise maintenance shall be provided at no cost to the purchaser for a period of one (1) year from date of installation unless damage or failure is caused by misuse, abuse, neglect, or accident.

1.13 Deliver products in factory containers. Store in clean, dry space in original containers. Protect products from fumes and construction traffic. Handle carefully to avoid damage.

Support

1.14 Telephone Support: Free telephone support must be provided during normal business hours from the manufacturer.

1.15 Remote Updates: All application software must be upgradable by modem without site visits and without interrupting normal operations of other applications.

1.16 Remote Maintenance and Diagnostics: The vendor must have full access to the system via modem to do all of the following without shutting down the system to users.

1.16.1 Direct access to data base

1.16.2 Direct access to error logs

©JCE #26047

1.16.3 Direct access to removable stoppage

1.16.4 Defragment files and drives.

1.16.5 Start up and shut down any or all voice processes

1.16.6 Run a program to check the disk

Submittals

1.17 **Group #1 Submittal** shall be made in electronic format within (20) working days after the award of the contract by the District. This submittal shall include the following:

1.17.1 Complete Bill of Materials in Excel Spreadsheet format with bills of quantities, including all materials, components, devices, and equipment required for the work. The bills of quantities shall be tabulated respective of each and every system as specified and shall contain the following information for each Section listed - Description and quantity of each product, Manufacturer's Name and Model Number, Manufacturer's Specification Sheet or Cut Sheet and Specification Item Number referenced for each required product or if not shown in the specifications, Drawing Detail Number being referenced. (ie; Spec. 27 20 00 Item 2.1.3 and/or Detail #1/E4.15:

1.17.2 Material Cut Sheets shall provide detailed product information and shall be original manufacturer product bulletins

1.17.3 Equipment items which have individual components will require that all component parts be listed individually.

1.17.4 Description of any specialty backbox requirements

1.17.5 All wiring types required for installation of this system

1.17.6 Spare parts shall be listed individually to verify proposed quantity

1.17.7 Include with submittals all warranty information and a description of support and maintenance services to be provided. Also include all licenses and maintenance agreements required for continued operation of the equipment

1.18 **Group # 2 Submittal** shall be provided within (20) working days after the approval of the Group # 1 submittals and prior to any fabrication or field conduit installations. All shop drawings shall be engineered and drawn on a CAD System. Each submission shall include 'D' or ’E’ size print copies to match the contract drawings, and (1) USB Flash Drive copy with files in a AutoCAD format. Building floor plan CAD files will be made available. Contractor shall make the request for drawings in writing directly to Johnson Consulting

Engineers, confirmation of the request and a release form will be forwarded to the contractor to include a signed copy prior to release of files. Detail or riser diagram sheets or any other drawings other than floor or site plans, will not be made available to the contractor. Phase II Submittals drawings shall include the following.

1.18.1 Shop Drawings showing the complete floor plans showing the locations throughout the project of all receptacles, conduits, wireways, tray, pullboxes, junction boxes, equipment locations, and other devices.

1.18.2 Typical system riser diagrams, specialty equipment or rack elevations will be required to be provided, including equipment designations, punch block arrangements, and all intercom and other associated equipment

1.19 Common submittal mistakes which will result in the submittals being rejected:

1.19.1 Not including the qualifications of the installing contractor.

1.19.2 Not including all items listed in the above itemized description.

1.19.3 Including catalog cut sheets which have several items on a page, and not clearly identifying by highlighting, underlining or clouding the items to be reviewed, or crossing out the items which are not applicable.

1.19.4 Not including actual manufacturer's catalog information for proposed products.

1.19.5 Do not include multiple manufacturers for similar products and do not indicate "or approved equal" statements, or "to be determined later" statements. The products being submitted must be the products installed

PART 2 – PRODUCTS

Intercom / Class Pass Bell System

2.1 Existing Analog Intercom System Head-End is Bogen MultiComm 2000. Provide the following additional speakers and horns where shown on the drawings. Head-End Cabinet is existing in Head-End Room in Building 500.

2.2 Cross-Connect Paging Speakers and Exterior Horns as required through feed cables in the existing Head-End Closet and existing MDF Room. Refer to the detail drawings and site plans for the provision of the additional feed cabling.

2.3 Provide additional Speakers and Horns as shown on the drawings as follows;

2.3.1 Recessed accessible ceiling mounted speaker – Atlas/IED Part #DT12 1'x2' drop in type speaker with external tap selector, recessed ceiling enclosure with perforated tile baffle and tile bridge. Speaker baffle shall be white power coat epoxy finish. Speaker shall be tapped at 2 watts each.

©JCE #26047

2.3.2 All ceiling mounted speakers shall be provided with a minimum of (1) 12-AWG ceiling support wire securely attached to the structure above as detailed in the drawings. The speaker shall not depend on the ceiling tile grid for support.

2.3.3 Surface mounted speaker – Atlas/IED Part #VP14ENC with square surface mount slanted enclosure. Provide 8" speaker plus baffle – Atlas/IED Part #VP14MB with white power coat epoxy finish and shall be attached to the enclosure with vandal-resistant screws. Speaker shall be tapped at a minimum of 5 watts. The speaker shall be surface mounted on the wall, over J-Box furnished by the Division 26 Contractor.

2.3.4 Recessed Exterior Paging Horn – Provide Atlas/IED Part #VP161-APF Vandal Proof Baffle, #APF-15T series Horn/Loudspeaker, and #161RES Stainless-Steel Series Enclosure. Unit must be weather and vandal resistant. All horns shall be tapped at 15 watts.

2.3.5 Surface Mounted Exterior Paging Horn – Provide Atlas/IED Part #VP161-APF Vandal Proof Baffle, #APF-15T series Horn/Loudspeaker, and #161SES stainless steel series enclosure. Unit must be vandal and weather resistant. All horns shall be tapped at 15 watts.

2.4 Each speaker location cable shall be individually home run to the IDF Closet Communications Backboard or Cabinet. Provide 1-pair, 18-AWG unshielded CMR rated speaker cable by West Penn #224 (or approved equal) to each speaker location. Terminate speaker cable on terminal strips at the backboard. All speakers shall be home run to the IDF location. Speakers/Horns may not be run in a series, unless otherwise shown on the drawings. All speaker runs shall be numbered and labeled with type-written wrap around labels.

2.4.1 Cross-connect the output from the amplifiers on the terminal strips to the speakers and horns. All connections shall be labeled at the terminal strip with the Zone and Building Name or Number.

2.4.2 All speaker cables installed shall contain all necessary conductors and/or cables to all devices shown on the Drawings and the Contractor shall make all necessary conductor terminations to all devices for a complete system.

2.4.3 All cables routed underground shall be suitable for wet location provided with UL listed wet location insulation or flooded type cable construction as manufactured by West Penn Aquaseal #AQ224 (or approved equal).

2.5 Contractor shall be responsible for testing all paging speakers and horns and ensuring the proper volume levels are set in the paging software, on the amplifiers and on the speakers/horns. Provide (4) man hours for re-adjustment of the speaker's and horn's volume, per the District's requirements, 4 weeks after the building has been occupied by the students. Check with School Administrative Staff for areas that are either too

loud or too soft. The final adjustments to the individual IP-Based speakers/horns, zone controllers, analog speakers/horns and amplifiers shall be documented and furnished as part of the As-Built documents for the project.

2.6 Wrap around labels are required on all cable connections at the rear of the amplifier, at the zone controller and at the terminal strip for all cabling to the speakers or connections between equipment. Label shall clearly define paging zones, room numbers or type of port. Label shall be Brady self-Laminating 1.2” x 1/5” wrap around type #29689 – (No approved equal

2.7 Interior Speakers shall be tapped at 2-Watts and Exterior Page Horns shall be tapped at 15-Watts each. Contractor shall provide Paging Amplifiers in the IDF Cabinet for the new interior Speakers and Exterior Horns.

2.8 Provide amplifiers for the analog paging speakers and horns connected to the Intercom System. Amplifiers shall be rack mounted in the IDF equipment rack or cabinet. Provide rack mount adapter brackets as required to mount one or two amplifiers in a single rack unit. Provide quantity of amplifiers to service the quantity of horns and speakers as shown on the drawings. Size of amplifier shall be determined by the load, plus 25% expansion capacity. Larger amplifier may be required for a single zone depending on quantity of horns and speakers requiring amplification. Contractor is responsible for providing sufficient power amplification to service all speakers and horns.

2.9 Provide amplifier choice based on load: Approved Models; JBL CSA series, 280Z/2120Z or approved equal by Ashly. Total amplifier wattage on each channel shall allow for 25% headroom with speakers tapped according to the specifications. Contractor MUST submit a line diagram showing all locations and tap values with amp load as part of the Phase II submittals.

Class Pass Bell Scheduling System

2.10 Contractor shall provide all programming for the new speakers and horns. Coordinate with the District Facilities Department and the School Administration for Pass Class Bell Schedule changes and zoning requirements.

PART 3 – WIRELESS CLOCK SYSTEM PRODUCTS

3.1 Wireless clock system is existing.

3.2 Acceptable clock manufacturer shall be by Innovation Wireless.

3.3 The Clock System design requirements shall be based on a wireless, FM-Based distribution system with clocks individually battery powered. The District Standard for Wireless Clock Systems is as manufactured by Innovation Wireless.

3.4 System shall operate on a 72MHz frequency. The 72MHz frequency transmitter efficiently sends time synchronization signals through commercial building materials to

ensure all devices receive important time updates, even for Daylight Saving Time and after a power outage.

3.5 Contractor shall provide a five-year extended warranty on the clocks to the District

3.6 Clock locations shall be as indicated, and clocks shall be fully portable, capable of being relocated at any time.

3.7 Clocks shall not be installed until painting and other finish work in each room is complete.

3.8 Standard Clock shall be 13” Innovation Wireless Standard Krono Sync Series Analog Clock, with a black outer casing. Clocks shall be Part # 210001 (Battery) with the following features;

3.8.1 Heavy Duty Construction -Durable ABS Casing

3.8.2 Polycarbonate Lens (shatter resistant)

3.8.3 Battery (2 D-Cell Alkaline)

3.8.4 Automatically Adjusts for DST

3.8.5 Standard Analog clocks shall be wall mounted. Face shall be white, Standard Arabic 12/60 Numbering (Part # SA60) and the Hour and minute hands shall be black

3.9 Battery-operated analog clocks shall have up to a 5-year battery life. Battery life is based on common operating conditions and may very due to installed site conditions. Installer will furnish clock batteries in accordance with Manufacturer instructions. Battery-operated analog clocks shall remember the time during changing of batteries.

PART 4 - EXECUTION

Wireless Clock System Installation Requirements

4.1 Clocks shall be wall mounted using the manufacturer furnished mounting template. The clocks shall be mounted using the vandal-resistant mounting pattern.

4.2 Install each clock per its model mounting specifications per manufacturer instructions and mounting instructions at the indicated location.

4.3 Prior to final acceptance, clean exposed surfaces of devices, using cleaning methods recommended by Manufacturer.

4.4 Remove temporary labels from clock faces. Do not remove labels from backs of clocks.

4.5 Provide training to Owner's representative on setting, adjusting and configuring device and routine maintenance.

4.6 Provide training to District representative on installing the software, adjusting and programming the transmitter, setting and adjusting system devices and routine maintenance.

4.7 All devices must be tested at their operational location under normal operational conditions to assure reception of signal

Intercom System Installation Requirements

4.8 Provide (2) cables for Intercom Paging Station connection from each IDF to the Intercom Head-End Backboard unless otherwise shown on the drawings. Provide (1) Multi-pair Shielded 15-Conductors, 22AWG Stranded conductors, Wet location as manufactured by West Penn AquaSeal #AQC3274 (or approved equal) and (1) Voice Multi-pair Unshielded 12-Pair, 22AWG Solid conductors, OSP-Rated as manufactured by Superior Essex #04-059-27 (or approved equal). Refer to the Voice/Data Riser Diagram in the detail drawings for size of feed cables to be provided.

4.9 For voice multi-pair feed cables, terminate all pairs on both ends of the cable on 66-Type Split termination blocks by Siemon Model #66M1-50 on an S89B Stand-Off Bracket (or approved equal). Follow standard voice color codes for termination.

4.10 For Shielded multi-pair feed cables, terminate all pairs on both ends of the cable on Terminal Strips. Follow standard color codes for termination.

4.11 Terminate cables at the IDF Cabinet location in a 18”H X 15”W X 4”D Telephone Terminal Cabinet with a ¾” Plywood backboard inside the Cabinet. The Div 26 Contractor shall install the Terminal Cabinet and the 27 51 16 Contractor shall furnish and install the plywood backboard. Mount Punch Blocks and Terminal strips inside the cabinet.

4.12 Speaker cables shall be terminated inside the Terminal Cabinet per Voice/Data Riser Diagram in the detail drawings.

4.13 Wiring enclosures, terminal cabinets, outlets, frames of cabinet racks and other enclosures shall be grounded. Furnish and install #8 type THWN, green grounding wire from main public address terminal cabinet to console equipment rack main terminal. Frame of console and all circuit wiring requiring grounding shall be grounded to ground system at equipment rack main terminal. All loudspeaker circuits and communication circuits shall operate balanced to ground. Bonding shall be provided to assure equal potential measurement between the chassis of all amplifiers, power supplies, etc. Bond to the control cabinet and the green grounding conductor of the power circuit serving the equipment.

4.14 Circuits shall be grounded as recommended by manufacturer or equipment to which they are connected unless otherwise specified.

4.15 All wiring shall test free of grounds and shorts.

4.16 All wiring for the complete system shall be new wire. Any wires pulled through in underground junction boxes shall be continuous with no splices in these boxes. The wiring shall be intact without cuts in the protective outer jacket. All splices shall be made at building communication cabinets or main backboard, using terminal strips in all cases.

4.17 All buildings which can't comply with NEC 800 -30 (FPN) # 4, shall be properly protected for lightning and static electrical discharge. Provide all conductors entering or leaving the building within line fuses, or 188 type blocks with gas tube protectors.

4.18 All intercom wires and cables installed shall contain all necessary conductors and/or cables to all devices shown on the Drawings and the contractor shall make all necessary conductor terminations to all devices for a complete system.

4.19 All cables shall be installed within conduits, boxes, and cabinets unless where otherwise indicated approved on the drawings . Where open cable is approved all cables shall be neatly bundled and supported from the structure.

4.20 Where cables not approved for open wire interior applications, are routed more than 50 '-0" through the building, install cables in innerduct or EMT conduit.

4.21 All cables provided shall be UL listed.

4.22 All cables shall be delivered to the site in unbroken packages. Packages shall be inspected and approved by the District Inspector before opening.

4.23 All cabling shall be identified in each terminal cabinet and junction box. Where cables are routed through underground handholes each building and each system shall be identified with wet location ID tags.

4.24 Console and Cabinet Rack Equipment Installation: All equipment within each console and cabinet rack shall be logically arranged for accessibility of convenient maintenance. Equipment shall be mounted on shelves or panels and shall be securely attached. All cabinets and/or racks shall be seismically anchored to comply with T24 regulations.

4.25 Amplifiers, power supplies and other heavy devices shall be mounted on steel shelves made by manufacturer of console and cabinet racks. Cabinet, console, and panel faces, including drawers shall be same color.

4.26 Wiring within console and cabinets shall be installed to conform to standard engineering practice,and shall be terminated on terminal strips having a terminal for each required external connection. Wiring shall be cabled, laced and securely fastened in place so that no weight is imposed on any equipment, control switches or terminals. Wires carrying audio power shall be shielded. Input and output circuits and terminal strips shall be installed to provide separation necessary for proper operation. Wires shall be identified by number and chart.

4.27 Conductor shields for each system shall be grounded at one location only. Grounding shall be done within console and cabinet racks. There shall be no metallic connection between systems. Conduits for system and 120 volt AC system shall be bonded together at console and all cabinet racks.

4.28 120 Volt AC supply shall be connected from each piece of equipment directly to power strips provided by system supplier. The power strip shall be provided with a "SO" type power cord to connect to the building power receptacle.

4.29 Lines and cables within cabinets and on main terminal backboards shall be carefully cable-strapped. Cables shall be formed in rectangular configuration. Each cable shall be properly numbered in numerical order and shall maintain same number throughout site.

4.30 Conductors shall be color-coded and individual cables shall be rung out, and tagged with code wire markers. Each cable index strip shall be typed and installed on terminal cabinet door.

4.31 Terminations and connections throughout system shall be on terminal blocks, except at equipment which requires removal for servicing. Connections to such equipment and cables shall be screw-terminal type or plug-in type. Cables shall be identified as to buildings and rooms served, and terminated in all terminal cabinets and backboards.

4.32 Blocks shall be mounted in vertical rows only. Cable with lowest number shall be terminated on upper left side, with next cable in numerical order just below first cable and so on. When left side of first row of blocks is full, next cable in numerical order shall be terminated on the upper right side of first row of blocks, and so on.

4.33 Do not pass grouped cables in area that is to be used for jumpering. Cables shall enter blocks from top or bottom only, and shall not be in same area as jumper wires.

4.34 Contractor shall submit shop drawings to the Architect, for approval, indicating proposed wire tag designations for cables and terminal block layout for all terminal cabinets and backboard locations.

General Performance Requirements

4.35 Contractor shall compile all data needed (room names, room numbers, drawings with station locations, etc.) to program the complete system. System programming shall be limited to features specified in this Specification.

4.36 Reproduction of speech shall be clear, high fidelity, and with all frequencies within range of system faithfully reproduced with no detectable noise, hum, or distortion.

4.37 Reproduction shall be attained at sound levels sufficient to override noise levels typical for schools, to provide a thoroughly satisfactory and serviceable system.

4.38 Audio level of intercommunication system shall be attained at sound levels sufficient to override noise levels typical for schools, to provide a thoroughly satisfactory and serviceable system with a minimum of 70 dB isolation between public address and intercommunication signals. The contractor shall adjust the individual speaker taps at any location the district requires lower or higher sound levels

Inspection and Test upon Completion

4.39 Check out and final connections to the system shall be made by a factory-trained technician in the employ of a manufacturer of the products installed. In addition, factory-trained technicians shall demonstrate operation of the complete system and each major component to the Owner.

4.40 System field wiring diagrams shall be provided to the owner by the system manufacturer prior to completion of the installation.

4.41 All materials and installation shall be guaranteed to be free of defects in material and workmanship for two years after final acceptance of installation and test.

4.42 Upon completion of the installation, four (4) copies of complete operational instructions shall be furnished, complete with record drawings. Instructions shall include part numbers and names, addresses, and telephone numbers of parts source. Final payment shall not be made until operational and maintenance manuals have been received.

4.43 Upon completion of the installation of the equipment, contractor shall provide to the owner a signed statement from the equipment manufacturer that the system has been tested and functions properly according to the specifications.

Operation and Training

4.44 Warranty service calls made by telephone to this contractor or his designated representative shall hereby be defined as proper notification that warranty service is required.

END OF SECTION

SECTION 28 01 00

ELECTRONIC SAFETY AND SECURITY
GENERAL PROVISIONS

PART 1 - SUMMARY

1.1 This Division of the specifications outlines the provisions of the contract work to be performed as a sub contract under the Division 26 scope of work. Reference the Division 26 Electrical General Provisions for scope of work and general requirements.

1.2 In addition, work in this Division is governed by the provisions of the bidding requirements, contract forms, general conditions and all sections under Division 1 requirements.

END OF SECTION

©JCE #26047

SECTION 28 13 00
SECURITY SYSTEM

PART 1 – GENERAL

1.1 Furnish all materials, equipment and labor, and perform all operations in connection with systems work as indicated on the drawing, as specified herein and required to complete the work.

1.2 Related Specification Sections:

Division 26 05 33 – Conduit and Fittings

Division 26 05 19 – Conductors

Division 26 05 34 – Outlet and Junction Boxes

1.3 All security system components shall be manufactured by and wiring shall be furnished and installed by a factory authorized contractor and distributor. The Contractor shall hold a license from the State of California for the purpose of installing security systems.

1.4 The contractor shall be regularly engaged in the installation and repair of the type of equipment to be installed.

1.5 The conduit, outlets, terminal cabinets, device backboxes, etc., which form a part of the rough-in work, shall be furnished and installed complete by the Contractor. Security system components as listed under products shall be furnished and installed by the authorized subcontractor.

1.6 The subcontractor shall furnish all equipment, accessories and material required for the complete installation of a security system in accordance with specifications and as shown on the drawings. Any material and/or equipment necessary for the proper operation of the system not specified or described herein shall be deemed part of this specification. The distributor must also provide complete installation of all wiring and devices or equipment. Supervised installation for the wiring and devices shall be permitted with the following conditions:

1.6.1 A letter will be required from the security system manufacturer's representative certifying that the cable installation was completed in compliance with the manufacturer's recommended installation requirements.

1.6.2 The cables shall be tested in the presence of the manufacturer's representative. These tests will then be submitted to the electrical engineer.

1.6.3 The security system shall be warranted by the manufacturer's representative per the contract agreement.

1.7 General Submittal Requirements

1.7.1 **Phase I Submittal** shall be made in electronic format within (20) working days after the award of the contract by the District. This submittal shall include the following:

1.7.1.1 Complete Bill of Materials in Excel Spreadsheet format with bills of quantities, including all materials, components, devices, and equipment required for the work. The bills of quantities shall be tabulated respective of each and every system as specified, and shall contain the following information for each Section listed:

1.7.1.2 Description and quantity of each product.

1.7.1.3 Manufacturer's Name and Model Number.

1.7.1.4 Material Cut Sheets shall provide detailed product information and shall be original manufacturer product bulletins. Copies of material information from vendor websites shall not be considered equal and will not be accepted.

1.7.1.5 Material Cut Sheet part number provided shall be highlighted or provided with an arrow directed at the corresponding part number.

1.7.1.6 Specification Item Number referenced for each required product or if not shown in the specifications, Drawing Detail Number being referenced. (ie; Spec. 281300 Item 2.1 or DWG E4.15/#1)

1.7.1.7 Include with submittals all warranty information and a description of support and maintenance services to be provided. Also include all licenses and maintenance agreements required for continued operation of the equipment.

1.7.2 **Phase II Submittal** shall be provided within (20) working days after the approval of the Phase I submittals and prior to any fabrication or field conduit installations. All shop drawings shall be engineered in a CAD Software. Submission shall include electronic print copies to match the contract drawings, and Phase II submittals drawings shall include the following.

1.7.2.1 Complete floor plans showing the locations throughout the project of all receptacles, conduits, wireways, tray, pullboxes, junction boxes, equipment locations, and other devices.

1.7.2.2 Typical system riser diagrams, specialty equipment or rack elevations will be required to be provided.

1.7.2.3 The contractor shall provide as part of this contract additional ceiling motion sensors, wall motion sensors, security door and roof hatch contacts to equal 10% of the total quantity of devices shown on the drawings or a minimum of three (3) for each type, whichever is greater. Installation of conduit, boxes and wiring of these devices shall be included, and required locations coordinated with final approved shop drawings. Any deices not required to be included during construction shall be delivered to the District at the completion of the project. The quantities of these devices shall be listed as a part of the Phase 1 submittals.

1.7.3 Common submittal mistakes which will result in submittals being rejected:

1.7.3.1 Not including the qualifications of the installing Contractor Company and Contractor's Staff.

1.7.3.2 Not including all items listed in the above itemized description.

1.7.3.3 Including catalog cut sheets which have several items on a page, and not clearly identifying by highlighting, underlining or clouding the items to be reviewed (provided for the project) or crossing out the items which are not applicable.

1.7.3.4 Not including actual manufacturer's cut sheets or catalog information of proposed products.

1.7.3.5 Do not include multiple manufacturers for similar products and do not indicate "or approved equal" statements, or "to be determined later" statements. The products being submitted must be the products installed.

1.7.4 The Contractor shall make a written request directly to Johnson Consulting Engineers for electronic drawing files (CAD). As a part of the written request, please include the following information:

1.7.4.1 Clearly indicate Project Name and Client, Johnson Consulting Job Number (located in bottom left corner of JCE Engineering Stamp) and each drawing Sheet Number required (i.e., E1.1, E2.1, E4.1 etc.).

1.7.4.2 Identify the name, Company, Title, phone number, mailing address and e-mail address of the person to receive the files.

1.7.4.3 Detail or Riser diagram sheets, System Schematic drawings or any other drawings other than floor plans or site plans, will not be made available to the Contractor.

1.7.4.4 Files will only be provided in the AutoCAD format in which they were created (i.e., version 2015 or version 2016). Files will not be made available in REVIT format.

1.7.4.5 Requests for files will be processed as soon as possible; a minimum of 7 working days should be the normal processing time. The Contractor shall be completely responsible for requesting the files in time for their use and delays in requesting files will not alleviate the Contractor from submitting required documents within the required timeline.

PART 2 – PRODUCTS

Building Security System – Control Panel

2.1 Control Panel in the location shown in the specifications and the drawing details. The existing Security System on the campus is as manufactured by **Digital Monitoring Products (DMP)**.

2.2 The Control/Communicator panel shall be a multiplex micro processed based system as manufactured by **DMP Model XR500**. Existing Main Security Control Panel is in the **existing intercom/security system headend closet in Building 3** serving as the Master Security Control Panel. Refer to the floor plans for the location of the panel.

2.3 The system must be able to provide the following minimum functions:

2.3.1 Provide capacity for 574 individual zones.

2.3.2 Up to 16 independent Access Control Door locations (Wiegand).

2.3.3 Minimum capacity of (16) Supervised keypads from one control panel.

2.3.4 Up to 500 wired or wireless LX Bus devices

2.3.5 Fully supervised 10/100 Ethernet network and CDMA/HSPA+ cellular communications capabilities.

2.3.5.1 Control Panel shall be provided with 10/100Mbps Ethernet Card Option

2.3.5.2 Provide 263LTE-FN FIRSTNET READY™ Cellular Communicator Option.

2.3.5.3 When using the 263LTE-FN with the XR150/XR550 Series Control Panels, provide a Model #381 cable for connection from the cell module SMA connector to the panel enclosure knockout.

2.3.6 Central Station reporting via ethernet connection (IP) and simultaneous digital dialer for multiple central station receivers.

2.3.7 Interface with the district central monitoring system to report all addressable devices individually (by site, building and room) and to be remotely programmable from the district central system for maintenance and changes to the system.

2.3.8 U.L. listed for Burglary and access control

2.3.9 Battery backup included

2.3.10 Capability to extend keypad or sensor wiring bus lengths to a minimum of 15,000 ft.

2.3.11 Systems or components as manufactured by Bosch, Honeywell, Radionics or any other manufacturer's which are not specifically listed in 2.1, are not approved for use on this project

2.4 Provide a complete and operable supervised intrusion detection system including, but not limited to; control panel, keypad stations, motion detectors, door contacts, zone expanders and repeaters and a digital communicator.

2.4.1 The new Security Control Panels shall be tied in with the existing Main Security Control Panel in the 500 Building.

2.4.2 Upon detection of an intruder by initiation of any device in the system, the system shall cause alarm information to be sent by (IP) to the district central station and by digital dialer to an independent alarm monitoring agency. Each motion sensor and or door contact shall have a distinct address and each address shall report to the monitoring agency including the site name, building name, and room number identifications associated with each device. The installing contractor must submit a list of all devices and their reporting identifications to the district for review and approval prior to any programming. Naming and room numbers must be consistent with actual facility identifications, which may vary from identifications included in the bid construction documents. An operational test of each installed system must be able to confirm compliance with the above requirements for each

device installed, before the system will be considered complete and operational.

2.4.3 Coordinate with the District Facilities Department for integration with the existing campus security system for access to the Administrative Level software for system programming.

2.4.4 Upon detection of an intruder by any initiation device in the system, the system shall cause a prerecorded message to be played over the campus intercom system. The intercom system shall play the message over all INTERIOR only speakers. The message shall repeat (2) times “An unauthorized entry to the facility has been detected, authorities have been contacted “in both English and Spanish.

2.5 Systems shall detect the entry and/or the motion of a body taking not more than four steps in an area secured with motion detection equipment where entry doors or windows are possible access.

2.6 New Buildings shall be zoned and controlled separately and each sensor individually addressable so that portions of the facility may be secured while others remain unsecured. All zones for the New Buildings shall be able to be armed or disarmed from the new keypads where shown on the drawings.

2.7 New Control Panels shall be furnished with a new Category-6 Data Outlet by the 27 10 00 Contractor in the IDF Closets.

2.8 Existing Master Keypad location in the Administration Building. Program Keypad to add the additional Zones for Universal Arm/Disarm of the campus.

2.9 Provide Keypads as shown on the drawings.

2.9.1 When staff arrives, they would present their code to the keypad. This would disarm the building in which the staff works, and the not armed indicator light at the annunciator will be triggered.

2.9.2 When staff is leaving, (and presumably is the last one from their building leaving) they would press the "Command" button, then select "Arm", then select "All". The building would arm, and the armed indicator light at the annunciator will be triggered

Building Security System – System Devices

2.10 Provide the Security System Devices as shown on the project floor plans. Every type of device described below may or may not be shown on the floor plans.

2.11 Keypads - Keypads shall be alpha numeric LCD display series capable of displaying system status and controlling the alarm system. Unit shall receive its operating power from the control panel.

2.11.1 All zones shall have the ability to be controlled by the existing Master Keypad located in the Administration Building.

2.11.2 Provide keypads at locations where on drawings for coverage of the zones as required by District. Each building or zone shall be furnished with a keypad, unless otherwise noted on the drawings or in these specifications. Provide two-line Alphanumeric 32-character LCD display keypad with two-button panic and four zones by DMP Model # 7073A Aqualite Series Keypads (No Approved Equal).

2.12 Motion Sensors - Motion sensors shall be passive infrared with microwave Doppler radar detection. Sensor coverage patterns shall be as required for optimum coverage at each individual location. Sensor shall be wall mounted at the locations as shown on the drawings.

2.12.1 Wall Mounted Motion Sensors – Large Rooms – DMP Model #Optex DX-60 Plus (No Approved Equal). Dual Tech PIR and Microwave wall mounted sensor with a minimum coverage pattern capability of 60-feet by 60-feet. Larger non-classroom spaces shall also be provided with this model of sensor.

2.12.2 Wall Mounted Motion Sensors – Classrooms – Offices, Workrooms or other similar smaller rooms - DMP Model #Optex DX-40 Plus (No Approved Equal). Dual Tech PIR and Microwave wall mounted sensor with a minimum coverage pattern capability of 40-feet by 40-feet.

2.12.3 Contractor shall furnish and install the wall mount brackets for the wall mounted motion sensors by DMP Optex Model #FA-1W or Model #FA-3 (No Approved Equal). Type of bracket provided shall be based on desired coverage for the sensor.

2.12.4 Ceiling Mounted Motion Sensors in Rooms with Accessible Ceilings – DMP Model #Optex FX-360 (No Approved Equal). Rooms with accessible ceiling, between 8-12 feet in height, shown with ceiling mounted sensors shown on the floor plans, shall be furnished with a PIR Technology ceiling mounted sensor with a minimum coverage pattern capability of 25-feet to 40-feet in diameter.

2.13 Door Contacts – Door contacts shall be provided at all exterior doors and at all roof hatches. Contractor shall refer to the drawings for the locations of the doors and roof hatches. In addition, all roll-up type garage doors or security shutters shall be provided with door contacts.

2.13.1 Door contacts for standard doors at drywall walls or accessible walls shall be installed as recessed contacts. Provide DMP Model #1076C Magnetic Terminal Contacts (No Approved Equal).

2.13.2 Door contacts for standard doors at concrete or CMU walls or non-accessible walls shall be installed as surface mounted contacts. Provide DMP Model #Sentrol 1085TW Magnetic Wide Gap Terminal Contacts (No Approved Equal).

2.13.3 Door contacts for Store Front glass doors shall be installed as miniature size recessed contacts. Provide DMP Model #STB-10 Magnetic Terminal Contacts (No Approved Equal).

2.13.4 Door contacts for overhead roll-up garage doors or security shutters shall be surface mounted heavy-duty, industrial wide gap type with 36" armored cable by DMP Model #Sentrol 2505A Magnetic Terminal Contacts (No Approved Equal).

2.13.5 Door contacts must be installed using the screws and the adhesive contact sheet provided with the door contact or with the screws alone. Installation using the adhesive contact sheet alone is not allowed.

2.13.6 Cable splice connections for the armored cable provided with overhead roll-up garage door contacts shall be provided inside a dual gang junction box in an accessible location for future maintenance. The junction box shall be provided with a blank cover labeled with a permanent type-written label showing the unique device number and any zone information or door number.

Building Security System – System Cable

2.14 Wire and Cable - Cabling shall be as required for system operation or as shown in the specifications and detail drawings. Refer to the floor plans for additional requirements.

2.14.1 Interior Riser Rated Keypad Cable - Provide (4) conductor, 18-AWG, Polypropylene coated stranded bare copper conductors with PVC jacketed, Riser-rated cable for keypad locations within a building. Provide Honeywell Part #2115 or West Penn Part #244.

2.14.2 Exterior Water-Blocking Rated Keypad Cable - Provide (4) conductor, 18-AWG, stranded bare copper conductors with PVC jacketed, Outdoor-rated, direct burial type cable for keypad locations between buildings. Cable shall be used for all exterior cable runs. Provide Honeywell Part #4157 or West Penn Part #AQ244.

2.14.3 Exterior Water-Blocking Rated Trunk Cable - Provide Unshielded (8) conductor, 18-AWG, stranded bare copper conductors with PVC jacketed,

Indoor/Outdoor-rated, Wet Location Water Blocking Tape type cable for Security Trunk between the Main Control Panel and Secondary Security Panels. Cable shall be used for all exterior Trunk Cable runs. Provide West Penn Part #AQC188 (or Equal by Honeywell)

2.14.4 Interior Riser Rated Motion Detector Cable - Provide (4) conductor, 22-AWG, Polypropylene coated stranded bare copper conductors with PVC jacketed, Riser-rated cable for motion detector locations within a building. Provide Honeywell Part #2104 or West Penn Part #241.

2.14.5 Interior Riser Rated Door Contact Cable - Provide (2) conductor, 22-AWG, Polypropylene coated stranded bare copper conductors with PVC jacketed, Riser-rated cable for door contact locations within a building. Provide Honeywell Part #2102 or West Penn Part #221.

2.14.6 All cables shall be permanently labeled with a permanent type-written label showing a unique cable number a minimum of two locations, one within 6” and one 24” from the point of termination at the end of the cable.

2.15 Provide other items as shown in the drawings or specifications.

PART 3 – EXECUTION

3.1 All connections throughout the system shall be soldered, crimped by means of AMP lugs, fastened with screw type terminals, made by spring tension clip "punch block" terminals or made by standard plugs and receptacles. All conductors in terminal cabinets shall be neatly routed and dressed with Velcro style cable ties in a workmanlike manner. The cable ties shall not cover any labeling at the ends of the cables.

3.2 All security system cabling shall be installed in conduit where indicated on the drawings or where routed exposed and shall be open wiring where routed above accessible ceilings or in walls.

3.3 Locate motion sensors on walls to provide optimum coverage of the space and to not conflict with the architectural aesthetics of the building. Locations of motion sensors as shown on the electrical plans are diagrammatic only.

3.4 Keypads shall be wired not to exceed 1000 ft cable run from the main control panel and no more than two (2) keypads per 1000-foot cable run. Provide #18AWG minimum. **All Cables routed underground shall be suitable for wet location provided with UL listed wet location insulation or flooded type cable construction**.

3.5 All wet location cables routed through handholes or manholes shall be provided with a service loop inside the handhole or manhole. The cable shall be provided with a minimum of one entire loop around the inside of the perimeter of the handhole.

3.6 Pull strings shall be provided with all cable runs including but not limited to; conduit stub ups, conduit sleeves, cable trays, open wiring routes and point-to-point conduits. Pull strings shall be free from cable bundles in open wiring routes. Pull strings shall not be substituted for pull ropes for the exterior site conduits.

3.7 Velcro cable management straps are required on all Security System cable bundles the last 20 feet or upon entry into equipment closet a maximum of 12" apart. Cable bundles shall also be routed through cable management or “D” rings in the equipment closet to the Security System backboard location shown on the floor plans.

3.8 The 28 13 00 Contractor shall supply protective bushings or slide on rings at the ends of all exposed conduits used for the security system cabling. This is to include all conduits installed for any future data cabling requirements. Contractor shall submit planned protection bushings prior to installation of cabling for approval.

3.9 Where open wiring cables are run through the ceiling space the wire shall be bundled together and supported above the ceiling.

3.10 The 28 13 00 Contractor may not use the cable suspension system installed by the 27 10 00 Contractor (for data cabling) for the security cabling. The 28 13 00 Contractor shall furnish and install a separate suspension system for the security system cabling.

3.10.1 All cables must be fastened to the building structure via “j-hooks” or an approved suspension system, and not directly in contact with ceiling system. For “j-hooks” follow the maximum fill capacity as recommended by the manufacturer based on the outside diameter of the security cables. For large quantities of cables, use a sling support system such as “Erico Cable Cat” or equal. D-rings, “Caddy #WMX cable hangar”, “Caddy Bridle Rings”, drive rings or any other type of wire ring support is not allowed.

3.11 Where cables pass through a fire-resistant portion of the structure, conduit sleeves shall be provided to maintain the rating of the wall penetrated. Sealing of all penetrations with an approved fire barrier is required. Conduits and sleeves must remain accessible for future use. Permanent sealants may not be used to seal sleeves and conduits.

3.11.1 The 28 13 00 Contractor shall coordinate with the 27 10 00 Contractor, 27 20 00 Contractor and any other Low Voltage Contractor working on the project, for use of the sleeve penetrations shown on the drawings.

3.11.2 The 28 13 00 Contractor shall be responsible for replacing the fire-stopping materials on any sleeve penetration used that was previously sealed. The firestopping material used for the replacement must match the existing materials.

3.11.3 If there are no existing conduit sleeves through the rated walls that must be penetrated, the 28 13 00 Contractor shall be responsible for providing the

conduit sleeve and the fire-stopping materials as shown in the drawing details.

3.11.4 Expanding foam is not an acceptable sealant for any conduit opening. Contractor shall be responsible for complete replacement of the conduit and cabling in any conduit filled with expanding foam used as a sealant.

3.12 The minimum bending radius for all cables and the maximum pulling tension shall not exceed manufacturer's recommendations.

3.13 Provide a full 360-degree loop of slack cable around pullbox interiors. Cables entering pullboxes from the bottom, shall not be allowed to touch the bottom of the cover when closed and shall not be pinched or crushed in any way.

3.14 When pulled through conduits, cable pulling lubricants shall be continuously applied to all cables and be specifically approved by the manufacturer.

3.15 Where cables are pulled through or pulled from a center of run, pull without splices or terminations, lead out the cables at all manholes, pullboxes, and conduits, taking care to feed them in again by hand for the next run.

3.16 A pull string shall be placed with all security device cables at the time of installation. Conduit runs and surface raceway for station cabling shall be furnished with a minimum 2-Ply spiral wrap style, pull string rated for 240 ft/lbs. pulling strength, such as manufactured by Greenlee #431 or approved equal. Includes all conduit stubs and cables routed through open ceilings and cable trays. Pull strings shall be tied off in the junction box and in the ceiling. Provision for the installation of the pull string shall apply to all empty and spare conduits as well. Single ply type pull string will not be accepted as a substitute for the 2-ply pull string.

3.17 A measuring pull tape shall be placed with all OSP-Rated Site Security cables at the time of installation. Outdoor conduit runs between buildings designated for feed cabling, in excess of 150 feet shall be provided with a minimum ½" polyaramid style, measuring true tape pull string annotated with footage increments rated for 2500 ft/lbs. pulling strength, such as manufactured by Greenlee #39245 or approved equal. Conduit runs less than 150 feet shall be furnished with a ¼" polyaramid style, measuring true tape pull string annotated with footage increments rated for 1250 ft/lbs. pulling strength, such as manufactured by Greenlee #39243 or approved equal. Provision for the installation of the measuring pull tape shall apply to all empty and spare conduits as well. Standard twine style pull strings and standard nylon or polypropylene style pull ropes will not be accepted as a substitute for the polyaramid measuring tape type pull string.

3.18 All cables shall be new and extend continuous from each MDF Closet Security backboard or IDF Closet Security backboard to all outlet locations.

3.19 Where cables are not installed in a conduit or other raceway system, they shall not be routed parallel with other line voltage equipment or wiring (120 volt and above) within 36" or within 12" of line voltage equipment or wiring where crossing.

3.20 Labeling

3.20.1 Each cable run shall be permanently labeled at each end with a unique sequential number which corresponds to a similar number provided for each security device. A printed label shall be placed at each of the following locations;

3.20.1.1 On the cable at the point of termination or termination block. Requires the use of a self-laminating wrap around label. Brady Label self-laminating 1.2" by 1.5" wrap around label Part #29689 (NO ACCEPTABLE EQUAL).

3.20.1.2 On each cable in the j-box behind the device location or on the cable before the point of termination at the device, for devices without a j-box. Requires the use of a self-laminating wrap around label. Brady Label self-laminating 1.2" by 1.5" wrap around label Part #29689 (NO ACCEPTABLE EQUAL).

3.20.1.3 On the cable at the terminal strip or pop-it prior to termination point. Requires the use of a self-laminating wrap around label. Brady Label self-laminating 1.2" by 1.5" wrap around label Part #29689 (NO ACCEPTABLE EQUAL).

3.20.1.4 The label shall be clearly defined with a minimum #10 font size.

3.20.2 Hand written labels are not permitted. Where cable ID includes room number identification, the Contractor shall obtain written verification of final room numbers prior to beginning labeling (numbers on plans do not always match final room numbers). Cable pulling cross reference lists will not be accepted with final documentation.

3.20.3 Labeling will follow recommended identification standards or District Standards as directed by the customer. Contractor will confirm labeling pattern prior to final identification or testing. All device identification designations shall match the final identification information shown on the Final As-Built Drawings. Contractor shall be required to have the labeling scheme approved in writing by the District Facilities Director prior to manufacture or installation of the labeling.

3.20.4 All OSP-rated cables routed through underground conduits shall be tagged with waterproof label tags in every manhole or pullbox. Waterproof label tags shall also be placed at each end of the cable in the termination closets or terminal cabinets in clear view at the point where the conduit transitions

up out of the slab or where the conduit enters the terminal cabinet. A minimum of (2) tags are required in each handhole or manhole.

3.20.5 Refer to detail drawings for additional labeling requirements

3.21 Final System Acceptance

3.21.1 The system will be accepted only after a satisfactory test of the entire system has been accomplished by a Factory-Trained Contractor in the presence of the Owner's Representative. This contractor shall provide all personnel, ladders and testing equipment to assist in completing this test. Actuate each device and verify that the system performs as specified.

3.21.2 Once the system has been tested, the contract shall not be considered complete until after District training has been completed. The Contractor shall notify in writing their intent to provide the training for the system. This notification shall be given to the Architect and the Project Engineer a minimum of two weeks prior to the scheduled training session. The 28 13 00 Contractor shall be responsible for notifying the District to confirm that the appropriate District personnel will be made available for this training session. If the District does not receive confirmation that the training session can be performed on the proposed date, than another time shall be provided. The training shall consist of the following:

3.21.2.1 Provide a minimum of one (1) two-to-four-hour training period located at the project site, to instruct District personnel in proper operation of all systems.

PART 4 – CLOSE-OUT DOCUMENTATION

4.1 Final As-Built Drawing Submittals - Provide (1) hard bound copy of “E-size” As-Built drawings and (3) copies on USB Flash Drive in AutoCAD (2019 or newer version) format. A Hand marked-up copy of the original construction drawings will not be accepted as the final As-Built drawing submittal. Final As-Builts shall include copies of the floor plan drawings of each building, detailed elevations of each MDF or IDF locating all equipment, quantities devices and locations, locations of all sleeves and identification of all final cable routes. In addition, the drawings shall include all device locations with unique cable identification numbers.

END OF SECTION

SECTION 28 30 00

FIRE ALARM SYSTEM

PART 1 – GENERAL

1.1 Work Included:

1.1.1 Furnish and install all equipment, accessories, and materials in accordance with these specifications and drawings to provide a complete and operating fire alarm system.

1.2 Related Work:

1.2.1 Division 26 01 00: Electrical General Provisions
1.2.2 Division 26 05 33: Conduit and Fittings
1.2.3 Division 26 05 34: Outlet and Junction Boxes

1.3 The equipment and installation shall comply with the current applicable provisions of the following standards:

NFPA 72-2025. . . . . National Fire Alarm Code with California Amendments.
CBC - 2025. . . . . California Building Code (CBC), Part 2, Title 24, CCR.
CEC - 2025. . . . . California Electrical Code, (CEC), Part 3, Title 24, CCR.
CFC - 2025. . . . . California Fire Code (CFC), Part 9, Title 24, CCR.

1.4 The system and all components shall be listed by Underwriters Laboratories, Inc. for use in Fire Protective Signaling Systems under the following standards as applicable:

UL 38 . . . . . Manually Actuated Signaling Boxes.
UL 50 . . . . . Cabinets and Boxes.
UL 268 . . . . . Smoke Detectors for Fire Protective Signaling Systems.
UL 268A . . . . . Smoke Detectors for Duct Applications
UL 346 . . . . . Waterflow Indicators for Fire Protective Signaling Systems.
UL 464 . . . . . Audible Signaling Appliances.
UL 521. . . . . Heat Detectors for Fire Protective Signaling Systems.
UL 864 . . . . . Control Units for Fire Protective Signaling Systems.
UL 1481. . . . . Power supplies for Fire Protective Signaling Systems.
UL 1971. . . . . Visual Signaling Appliances.

1.5 Only Fire Alarm Control Panel Equipment and Peripheral Field Devices have been shown on the Contract Bid Single Line Block Diagram. Specific and complete wiring between Control Equipment and Peripheral Equipment has been deleted for clarity.

1.6 Submittal shall be made **in accordance with Division 26 01 00 – Shop Drawings and Submittals.** This submittal shall include the following:

1.6.1 Complete bills of quantities, including all materials, components, devices, and equipment required for this work. The bills of quantities shall be tabulated respective of each and every system as specified, and shall contain the following information for each item listed:

1.6.1.1 Quantity of each type of equipment item.
1.6.1.2 Description of each item.
1.6.1.3 Manufacturer's Name and Model Number.
1.6.1.4 Manufacturer's Specification Sheet.
1.6.1.5 California State Fire Marshall Listing Sheets for all components.
1.6.1.6 Equipment items which have individual components, will require that all component parts be listed individually.
1.6.1.7 Letter indicating the contractor's intent to comply with Phase II submittal drawings.

1.7 Phase II Submittal shall be provided **within (20) working days** after the approval of the Phase I submittals and prior to any fabrication or field conduit installations. All shop drawings shall be engineered and drawn on a CAD System. Each submission shall include 'D' or 'E' size print copies to match the contract drawings, and one (1) data disk copy with files in a AutoCAD 2000i or 2004 format . Building floor plan CAD files on disk, will be made available via express mail after the receipt of payment of $50.00 per building floor plan, or $300.00 minimum which ever is less. Contractor shall make the request for drawings in writing directly to Johnson Consulting Engineers, confirmation of the request and a release form will be forwarded to the contractor to include a signed copy with payment prior to release of files. Detail or riser diagram sheets or any other drawings other than floor or site plans, will not be made available to the contractor.

1.7.1 **Provide complete shop drawings to include the following:**

1.7.1.1 Complete floor plans, at scale of contract documents, showing the locations throughout the project of all receptacles, conduits, wireways, tray, pullboxes, junction boxes, equipment racks, and other devices.

1.7.1.2 Point to point wiring diagrams showing wiring from panel terminals to each device.

1.7.1.3 Scaled floor plans indicating the location of devices, conduit runs, types, and number of conductors.

1.7.1.4 Riser diagram indicating all wiring and circuits.

1.7.1.5 Current State Fire Marshal listing sheets for all components and devices.

1.7.1.6 Provide battery power supply calculations, indicate point of power supply connection, means of disconnect, over-current protection, etc. for each panel.

1.7.1.7 Provide detailed information on conductors to be used-manufacturer, type, size, insulation, etc.

1.7.1.8 Provide voltage drop calculations for all conductor run is from each panel (i.e., main FACP, remotes, power extenders, etc.) for each panel.

1.7.1.9 Provide written sequence of system operation matrix.

1.7.1.10 Provide list of zones. (Every device that is addressable.)

1.7.1.11 Provide detailed drawing for annunciator panel indicating all zones and initiating devices.

1.8 **Common submittal mistakes which will result in submittals being rejected:**

1.8.1 Not including the qualifications of the installing contractor.

1.8.2 Not including all items listed in the above itemized description.

1.8.3 Including catalog cut sheets which have several items on a page, and not clearly identifying by highlighting, underlining or clouding the items to be reviewed, or crossing out the items which are not applicable.

1.8.4 Not including actual manufacturer's catalog information of proposed products.

1.8.5 Do not include multiple manufacturers for similar products and do not indicate "or approved equal" statements, or "to be determined later" statements. The products being submitted must be the products installed.

1.9 All equipment and material shall be new and unused, and listed by Underwriter's Laboratories for the specific intended purpose. All control panel components and field peripherals shall be designed for continuous duty without degradation of function or performance. All equipment covered by this specification or noted on Installation. Drawings shall be equipment suited for the application and shall be provided by a single manufacturer or be recognized and UL listed as compatible by both manufacturers.

1.10 It will be the responsibility of the Contractor to ensure proper specification adherence for system operation, final connection, test, turnover, warranty compliance, and after-market service. The distributor of the equipment specified must be factory-trained and certified.

1.11 Basic System Functional Operation, upon operation of any automatic, manual or other initiation device the following shall occur:

1.11.1 The system alarm LED shall flash.

1.11.2 A local piezo electric signal in the control panel shall sound.

1.11.3 A backlit 80 character LCD display shall indicate all information associated with the fire alarm condition, including the alarm point and its location within the protected premises.

1.11.4 History storage equipment shall log the information associated with each new fire alarm control panel condition, along with time and date of occurrence.

1.11.5 All system output programs assigned via control by event equations to be activated by the particular point in alarm shall be executed, and the associated system outputs (alarm notification appliances and/or relays) shall be activated.

1.11.6 LED display and audible signaling at the remote annunciator indicating building, fire zone, and type of device. Annunciator shall also provide a separate audible signal for CO detection with a green flashing light, with classroom number indication.

1.11.7 Automatic retransmission to a UL central station for fire department notification.

1.11.8 Automatic shut down of air conditioning units and/or smoke dampers furnished with duct detectors. Each building shall shut down all A/C units and dampers within that building as one zone.

1.12 All equipment and components shall be new, and the manufacturer's current model. The materials, appliances, equipment and devices shall be tested and listed by a nationally recognized approval agency for use as part of a protective signaling system, meeting the NFPA 72, 2025 Edition with California State Amendments.

1.13 All equipment and components shall be installed in strict compliance with manufacturer's recommendations. Consult the manufacturer's installation manuals for all wiring diagrams, schematics, physical equipment sizes, etc., before beginning system installation.

1.14 All equipment shall be attached to walls and ceiling/floor assemblies and shall be held firmly in place. Fasteners and supports shall be adequate to support the required load.

1.15 All wiring shall be installed in a conduit system.

1.16 The contractor shall provide as a part of this contract additional control modules, heat detectors, smoke detectors, CO detector, duct detectors, manual pull stations, strobes, mini-horns and exterior horn devices etc., to equal 10% of the total quantity of devices shown on the drawings, or a minimum of three (3) for each type, whichever is greater. Installation of conduit, boxes and wiring of these devices shall be included, and required locations coordinated with CSFM final approved shop drawings. Any devices not required to be included during construction shall be delivered to the District at the completion of the project. The quantities of these devices shall be listed as a part of the Phase I submittals.

1.17 The installing contractor shall provide a copy of current documentation, indicating that the contractor installing the fire alarm systems or devices and wiring, is certified by Underwriters Laboratories (UL) in its product directories under the listing category "PROTECTIVE SIGNALING SERVICES - LOCAL, AUXILIARY, REMOTE STATION, AND PROPRIETARY." The contractor shall be certified by the manufacturer to install and program the system. The contractor must also provide complete installation of all wiring and equipment, and software programming. Supervised installation of the wiring, devices and/or any software programming shall not be permitted.

1.17.1 The installing contractor must also be an “authorized dealer” by the equipment manufacturer, and must have completed all required training prior to the bid of this project.

1.17.2 The fire alarm system installation shall be warranted by the manufacturer’s representative.

1.17.3 The Contractor shall have a current California C-10 or C-7 Contractor’s License, and all individuals working on this project shall have passed the Department of Industrial Relations Division of Apprenticeship Standards – “Fire / Life Safety Certification Program.”

1.17.4 The installing contractor shall provide, at the time of submittal, a letter of intent to provide an extended service warranty. This warranty shall extend for a total of three (3) years, starting at the completion, testing, and training of this project. The service warranty shall cover all material and labor to keep operational all system devices installed under this project, and shall include two (2) complete U.L. system’s tests and cleaning of all devices at year two (2) and year three (3) of the warranty. Routine cleaning of devices, other than at the two (2) specified U.L. system’s testing periods, will not be included as a part of this warranty.

1.17.5 The installing contractor shall provide, at the time of submittal, a letter indicating that the installation crew for this project meets the following NICET certifications:

1.17.5.1 25% of the installing field personnel must have completed NICET Level 2 Certification.

1.17.5.2 One of the installing field personnel and /or supervisor must have completed NICET Level 3 Certification.

1.17.5.3 Contractor shop drawings shall be signed by an individual who has completed NICET Level 4 Certification.

1.18 All conduit and standard backboxes will be furnished and installed by the Division 26 Contractor. Specialty boxes will be furnished by the equipment supplier to be installed by the Division 26 Contractor.

1.19 Equipment and materials shall be the standard product of Simplex, Notifier, or FCI.

Alternate equipment as manufactured by any other manufacturer not specifically listed above will not be approved for use on this project. D.S.A approved drawings are included as a part of the drawing set

PART 2 - PRODUCTS

2.1 Main Fire Alarm Control Panel

2.1.1 Fire alarm control panel is existing FCI E3 in existing admin building.

2.1.2 The system shall be controlled and supervised by a microprocessor based monitoring fire alarm control panel. The systems shall be addressable, field configurable, programmable and editable. The system shall continuously scan devices for change of status. Each device shall have its own unique address, but shall also be grouped by building as a separate zone for remote annunciation and alarm report purposes.

2.1.3 The system shall be provided with a networking card and software and modem to communicate with the District-wide diagnostic and annunciation network.

2.1.4 The fire alarm control panel shall be housed in a lockable, code gauge steel cabinet with 80 character LCD display, master controller operators panel, Indicating lamps, silence switch and reset switch mounted on cabinet front. The fire alarm control panel shall be physically and visually located in the general office for monitoring by staff, and shall sound the “Temporal Pattern” in all zones. Signal duration shall be field programmable and initially set at three

minutes. Provide all control modules, synchronous modules, etc., to provide a complete working system per all codes that apply.

2.1.5 The fire alarm control panel shall come with standardized software for on-site customization of the system. The unit shall be capable of providing a 600-event historical log with zone or point selectable alarm verification.

2.1.6 The unit shall support 127 addressable points per module and one output point, SPST contact per zone. Provide the number of modules necessary to control and supervise fire alarm devices as shown on the Drawings, as well as to provide 25% spare capacity.

2.1.7 The fire alarm control panel shall be capable of providing a walk test.

2.2 The power feed for the FACP shall be 3-wire, 120volt, AC, single phase (20A circuit) permanently labeled “FIRE ALARM CONTROL POWER”, terminating at the master fire alarm control and supervisory panel. The label shall be red with 1/4” high white lettering. The source circuit breaker must be provided with a lock-on device.

2.3 In addition to the AC circuit, the panel shall be equipped with a DC battery to activate an audible alarm and pilot light in case of a power failure on the AC circuit.

2.4 Batteries must drive signaling devices per current requirements of California State Fire Marshal. Battery calculations are required as part of the submittal.

2.5 The master fire alarm panel shall be equipped with a manual pull lever type, supervised report station.

2.6 With the exception of the manually operated report station required at the master fire alarm panel and large assembly areas, the remainder of the school facility shall be equipped with approved, electronically supervised, automatic fire detection devices, such that every room, space, including concealed spaces, such as the attic spaces above ceilings, etc., is provided with approved coverage.

2.7 REMOTE POWER SUPPLIES shall provide a minimum of (4) Class B NAC circuits.

2.7.1 Remote Power Supplies shall be provided adjacent to each Fire Alarm Control Panel that is incapable of supporting NAC strobe circuit(s). Refer to Fire Alarm Riser Diagram for quantity of strobe circuits required at each of these Fire Alarm Control Panels and provide additional Remote Power Supplies as required.

2.8 Automatic fire detection devices shall be addressable analog smoke and heat detectors. Where used, heat detectors shall be fixed temperature x-rate of rise, fixed at 135°F and a 15°F/min rate of rise. In janitor rooms equipped with kilns, devices shall be fixed at 170°F.

2.9 HORN / STROBE DEVICE shall be of the semi-flush type designed for mounting to a standard four-inch square electrical outlet box. Each device shall be provided with a semi-flush accessory plate. Exterior horns shall be weatherproof. The strobe unit shall have a meantime between failure (MTBF) of 1,000 hours or greater. The strobe section shall have a minimum flash rate of approximately one flash per second, with candela rating as per UL standard 1971. Housing shall be white.

2.9.1 In areas containing two or more audible devices, or three or more visual devices, these devices shall be synchronized, Per NFPA 72, Chapter 18 California Amendments (2025).

2.10 STROBES. The strobe unit shall have a meantime between failure (MTBF) of 1,000 hours or greater. The strobe section shall have a minimum flash rate of approximately one flash per second, with candela rating as per UL standard 1971. Housing shall be white.

2.10.1 In areas containing two or more audible devices, or three or more visual devices, these devices shall be synchronized, per NFPA 72, Chapter 18 California Amendments (2025).

2.10.2 Maximum pulse duration to be 0.20 of a second with an ADAAG 4.28.3(3). Visual alarms maximum duty cycle of 40%.

2.10.3 Capable of providing minimum candela. Intensity as shown on plans (effective strength measured at the source).

2.10.4 The flash rate to be a minimum of 1.Hz and a maximum of 2 Hz per NFPA 72 18.5.3.1.

2.11 HEAT DETECTOR DEVICES shall be addressable, fixed temperature x rate of rise, fixed at 135°F and a 15°F/min rate of rise. In janitor rooms equipped with kilns, devices shall be fixed at 170°F.

2.12 SMOKE DETECTOR DEVICES shall be analog addressable, photo-electric.

2.13 DIGITAL ALARM COMMUNICATOR TRANSMITTER. The control panel shall have the ability to meet the requirements of UL 864 for central station connections, and shall be UL listed for use with the fire alarm control panel. The communicator shall be connected to supervise two telephone lines, all wiring required for this connection shall be provided by the fire alarm contractor Coordinate interface with District monitoring company as required.

PART 3 - EXECUTION

3.1 All wiring shall be (min) #18 AWG copper or as noted on drawings. All underground conductors shall be UL wet location rated for use in wet locations, West Penn "Aquaseal" or equal. There shall be no splices in underground handholes or vaults. A

multi-conductor cable rated for use in wet locations will also be acceptable. It must be labeled “FIRE ALARM” in all pull boxes, using a water-tight labeling system.

3.2 Interior, dry location wiring for low voltage initiating circuits shall be #18 AWG copper, twisted shielded pair minimum, signaling circuits shall be No. 14 AWG minimum, and wiring for 120 volt circuits shall be No. 12 AWG minimum. All wiring shall be color coded, solid copper conductor. Use of power limited cable shall be restricted to controls listed for this purpose. Single conductors shall be type THHN/THWN-2 insulated copper.

3.3 Wire markers shall be provided for each wire connected to equipment. The marker shall be of the taped bank type, of permanent material, and shall be suitable and permanently stamped with the proper identification. The markers shall be attached in a manner that will not permit accidental detachment. Changing of wire colors within circuits shall be unacceptable.

3.4 A terminal cabinet shall be installed in the electric room for the fire alarm systems at each building. All fire alarm wiring shall terminate on UL approved strips in this terminal cabinet. All wiring shall be labeled at each termination strip. Wiring shall be configured such that all end-of-line resistors will be installed at the terminal cabinet.

3.5 Fire Sprinkler Activation detecting System(s) shall each be indicated on a separate zone in the fire alarm control panel.

3.6 Fire Alarm Control Panel and all other equipment shall be mounted with the center of all operable reset buttons, located a maximum of 48" front approach / 54" side approach above floor level.

3.7 Contractor shall provide complete wiring between all equipment.

3.8 The Fire Alarm/Life Safety Installation shall comply fully with all Local, State and National Codes, and the Local Authority Having Jurisdiction (AHJ) DSA.

3.9 The Fire Alarm Control Panel and power supply shall be connected to a separate dedicated branch circuit, maximum 20 amperes. This circuit shall be labeled at the main Power Distribution Panel as FIRE ALARM CIRCUIT.

3.10 The Control Panel Cabinet shall be grounded securely to a power system ground conductor. Provide a 1/2-inch conduit and 1#12 grounding conductor to the building electrical service ground bus.

3.11 Conduit shall enter into the Fire alarm Control Panel back box only at those areas of the back box which have factory conduit knockouts.

3.12 All field wiring shall be completely supervised. In the event of a primary power failure, disconnected standby battery, removal of any internal modules, or any open circuits in

the field wiring; an audible and visual trouble signal will be activated until the system and its associated field wiring are restored to normal condition.

3.13 All cables and wiring shall be listed for Fire Alarm/Life Safety use, and shall be of the type as required by and installed per CEC Article 760.

3.14 Final System Acceptance

3.14.1 Provide an NFPA Certificate of Compliance to DSA, the School District and Local Fire Marshall. Complete fire alarm system shall comply with and be sound-tested for a “Temporal Pattern” in all zones.

3.14.2 Beam detectors shall be tested by two methods:

3.14.2.1 Manual slow cover test to confirm reflector alignment is correct.

3.14.2.2 Software fire test per UL268.5 to demonstrate when signal level is reduced simulating obstruction the detector will go into alarm.

3.14.3 The system will be accepted only after a satisfactory test of the entire system has been accomplished by a Factory-Trained Distributor in the presence of a representative of the authority having jurisdiction and the Owner's representative. This contractor shall provide all personnel, ladders and testing equipment to assist the local authority in completing this test. Actuate each device and verify that the system performs as specified.

3.14.4 The Contractor will present a complete set of "as-built" Fire Alarm/Life Safety system drawings, and the factory supplied Operator's Manuals as required by the General Provisions section of this specification.

3.14.4.1 DOCUMENTATION CABINET shall be provided at the control panel and prominently labeled, “SYSTEM RECORD DOCUMENTS”. All record and testing documentation shall be stored in this cabinet. Contents shall be accessible by authorized personnel only.

3.14.5 Once the system has been tested and the certificate of compliance completed, the contract shall not be considered complete until after owner training has been completed. The contractor shall notify in writing their intent to provide the training for the system. This notification shall be given to the Architect and the Project Engineer a minimum of 2 weeks prior to the scheduled training session. The architect shall be responsible for notifying the owner to confirm that the appropriate District personnel will be made available for this training session. If the Architect does not receive confirmation that the training session can be performed on the proposed date, than another time shall be provided. The training shall consist of the following:

3.14.5.1 Provide a minimum of one (1) four-to-six -hour training period located at the project site, to instruct District personnel in proper operation of all systems.

3.14.5.2 Provide a minimum of three (3) complete owner operation manuals for the District records.

3.14.5.3 Provide a minimum of two (2) complete as built sets of drawings for the District records.

3.14.5.4 Provide all spare parts as described in part 1 of these specifications

3.14.5.5 Provide written confirmation and proposed scheduled dates for follow up training and 1 year complete system test.

3.15 Follow up Training

3.15.1 Provide as a part of this contract, the follow up instructional training period within six (6) months after the final acceptance of the systems. This training shall include a minimum of one four-to-six-hour training period to instruct District personnel in proper operation of all systems and shall instruct the District technicians how to repair any non-operational parts of the system as required. All defective parts shall be replaced at no cost to the owner.

END OF SECTION

SECTION 31 10 00
SITE CLEARING

PART 1 GENERAL

1.01 SECTION INCLUDES

A. Clearing and protection of vegetation.

B. Grubbing of root systems of trees and shrubs, abandoned utility lines and structures and other below grade obstructions and debris.

C. Removal of existing debris.

1.02 RELATED REQUIREMENTS

A. Section 01 10 00 - Summary: Limitations on Contractor's use of site and premises.

B. Section 01 50 00 - Temporary Facilities and Controls: Site fences, security, protective barriers, and waste removal.

C. Section 01 70 00 - Execution and Closeout Requirements: Project conditions; protection of bench marks, survey control points, and existing construction to remain; reinstallation of removed products.

D. Section 01 74 19 - Construction Waste Management and Disposal: Limitations on disposal of removed materials; requirements for recycling.

E. Section 02 41 00 - Demolition: Removal of built elements and utilities.

1. Removal of paving and removal if indicated of abandoned utilities.
2. Within building footprint, removal of designated walls, partitions, and other elements; capping and identifying utilities; and removal of concrete foundations.
3. Sitework (Area of Work), removal of designated fences, walls, and other elements; capping and identifying utilities; landscape paving, and removal of concrete foundations.

F. Section 31 22 00 - Grading: Fill material for filling holes, pits, and excavations generated as a result of removal operations.

1.03 SUBMITTALS

A. See Section 01 30 00 - Administrative Requirements, for submittal procedures.

B. Site Plan: Showing:

1. Areas for temporary construction and field offices.

1.04 QUALITY ASSURANCE

A. Clearing Firm: Company specializing in the type of work required.

1. Minimum of five years of documented experience.

PART 2 PRODUCTS

2.01 MATERIALS

A. Fill Material: As specified in Section 31 22 00 - Grading

PART 3 EXECUTION

3.01 SITE CLEARING

A. Comply with other requirements specified in Section 01 70 00.

B. Minimize production of dust due to clearing operations; do not use water if that will result in ice, flooding, sedimentation of public waterways or storm sewers, or other pollution.

3.02 SURVEY STAKING IN UNCLEARED EASEMENTS

A. Flag centerline of utility lines prior to clearing. Contractor shall set offsets for clearing limits to suit the Work.

B. When the clearing is completed, survey for utility construction in accordance with requirements specified in Section 01 70 00 - Execution and Closeout Requirements.

C. Contractor shall replace all controls and stakes damaged or destroyed, at no change in Contract Time or Contract Price.

3.03 EXISTING UTILITIES AND BUILT ELEMENTS

A. Coordinate work with utility companies; notify before starting work and comply with their requirements; obtain required permits.

B. Protect existing utilities to remain from damage.

C. Do not disrupt public utilities without permit from authority having jurisdiction.

D. Protect existing structures and other elements that are not to be removed.

3.04 CLEARING

A. Perform clearing Work within confines of Project area indicated on Drawings or specified elsewhere herein and with strict adherence to the Contract Documents and Geotechnical recommendations.

3.05 VEGETATION

A. Scope: Remove trees, shrubs, brush, and stumps in areas to be covered by building structure, paving, lawns, and planting beds.

B. Do not remove or damage vegetation beyond the limits indicated on drawings.

C. Install substantial, highly visible fences at least 3 feet high to prevent inadvertent damage to vegetation to remain:

   1. At vegetation removal limits.

D. Remove only trees within area to be cleared that have been marked for removal. Confirm trees to be removed with District and Architect before beginning removal process.

   1. Cut trunks close and parallel to ground.
   2. Remove roots where under or within five feet of proposed structures.

3. Neither remove nor prune trees and shrubbery in public rights-of-way except by written approval of authorities having jurisdiction.

E. In areas where vegetation must be removed but no construction will occur other than pervious paving, remove vegetation with minimum disturbance of the subsoil.

F. Vegetation Removed: Do not burn, bury, landfill, or leave on site, except as indicated.

1. Chip, grind, crush, or shred vegetation for mulching, composting, or other purposes; preference should be given to on-site uses.
2. Trees: Sell if marketable; if not, treat as specified for other vegetation removed; remove stumps and roots to depth of 18 inches.
3. Existing Stumps: Treat as specified for other vegetation removed; remove stumps and roots to depth of 18 inches.
4. Sod: Re-use on site if possible; otherwise sell if marketable, and if not, treat as specified for other vegetation removed.

G. Dead Wood: Remove all dead trees (standing or down), limbs, and dry brush on entire site; treat as specified for vegetation removed.

H. Restoration: If vegetation outside removal limits or within specified protective fences is damaged or destroyed due to subsequent construction operations, replace at no cost to District.

3.06 GRUBBING

A. At pipelines, remove all trees or stumps within five feet of the pipeline.

B. Perform grubbing where indicated on Drawings or as specified herein. Grubbing shall include removal from the ground of all stumps, roots, buried logs and other vegetation not otherwise indicated to remain, and removal and disposal of resulting refuse.

C. Completely grub areas where unsuitable surface material is to be removed.

3.07 DAMAGED VEGETATION

A. Neatly prune damaged branches and severed roots.

B. Apply wound paint to above-ground cuts and abrasions.

C. If trees and shrubs indicated to remain are damaged excessively, as determined by DSA, Architect or authorities having jurisdiction, remove and replace damaged plants with comparable plants.

3.08 DEBRIS

A. Remove debris, junk, and trash from site.

B. Remove logs, rocks and other debris.

C. Dispose of Debris resulting from clearing and thoroughly clean rights-of-way.

D. Leave site in clean condition, ready for subsequent work.

E. Clean up spillage and wind-blown debris from public and private lands.

3.09 DISPOSAL

A. Debris Disposal: Dispose of all cleared and grubbed materials in a legal manner off site.

B. Hazardous Materials:

1. Immediately notify the DSA should hazardous materials or suspected hazardous materials be encountered.
2. Dispose of such materials in accordance with all applicable laws and regulations and as directed by authorities having jurisdiction.
3. Unforeseen conditions will be resolved in accordance with the Conditions of the Contract.

C. Saleable Materials:

1. Unless otherwise indicated, all felled trees from which merchantable lumber or firewood can be produced shall become the property of the Contractor.
2. Unless otherwise indicated, all metallic debris of salvageable value shall become the property of the Contractor.
3. The Contractor shall remove all saleable materials from the site in a timely manner.
4. Sale of salvaged and merchantable materials shall be done on site only with prior approval of the District.

D. Stockpiling Vegetation: Only if specified or indicated under landscape work, stockpile vegetation for subsequent mulching.

E. Burial and Burning: Debris shall not be buried or burned on site.

3.10 DUST CONTROL

A. Refer to requirements of:

1. Section 01 50 00 - Temporary Construction Facilities and Controls.
2. Section 31 22 00 - Grading.

B. Minimize dust during clearing and grubbing to protect adjoining property and vehicles parked in the vicinity.

C. Clean-up: Keep public thoroughfares clear of dust and debris by periodic sweeping and washing down, at least daily at the end of working hours.

END OF SECTION

SECTION 31 22 00
GRADING

PART 1 GENERAL

1.01 SECTION INCLUDES

A. Coordinate work of this Section to compliment and coordinate with field conditions and Civil Drawing noted specific referenced requirements. Utilize the most stringent requirements.

B. Removal of topsoil.

C. Rough grading and consolidation/compaction the site for site structures and building pads.

1. Preparation for excavation, trenching, backfilling and compacting Work.

D. Excavation of subsoil, stockpiling for later reuse, and removal of excess from the site.

E. Preparing of subgrade for walks, pavements and site retaining walls.

F. Excavating, backfilling and compaction for wet utility lines.

G. Finish grading.

1.02 RELATED REQUIREMENTS

A. Section 01 40 00 - Quality Requirements.

B. Section 01 45 33 - Code-Required Special Inspections and Procedures.

C. Section 01 70 00 - Execution and Closeout Requirements.

D. Section 31 10 00 - Site Clearing.

E. Section 32 11 23 - Aggregate Base Courses

F. Section 32 12 16 - Asphalt Paving.

1.03 SUBMITTALS

A. Project Record Documents: Accurately record actual locations of utilities remaining by horizontal dimensions, elevations or inverts, and slope gradients.

1. Accurately record location of all changes in finish elevations and gradients which materially affect drainage.

1.04 QUALITY ASSURANCE

A. Regulatory Requirements: For conditions not covered in this Section, refer to applicable provisions of the California Building Code (CBC), Chapter 18A - Soils and Foundations, as amended and adopted by authorities having jurisdiction.

B. Perform Work in accordance with locally adopted SSPWC (Greenbook) standards.

1.05 PROTECTION

A. Dust Control: Comply with requirements specified in Section 01 50 00 - Temporary Facilities and Controls.

B. Protection:

1. Comply with general requirements specified in Section 01 50 00 - Temporary Facilities and Controls.
2. Provide protection for walks, curbs, drains, and trees and boxing around corners of existing buildings to prevent damage.
3. Keep adjacent roads, streets and drives clear of dirt and debris from earthwork operations.

C. Underground Utilities:
1. Buried utility lines may exist.
2. If such are encountered, notify DSA, Architect and District and for directions to be followed for preservation, relocation or demolition of utilities.

PART 2 PRODUCTS

2.01 MATERIALS

A. Topsoil: See Section 31 23 23.

B. Shoring and Bracing: Provide all materials and services necessary to properly engineer and construct shoring for excavations. Selection of materials and design of shoring, underpinning and bracing of new and existing structures shall be solely the responsibility of the Contractor.
1. Shoring design shall comply with State of California Trenching and Shoring Manual issued by Offices of Structure Construction; 2011.

PART 3 EXECUTION

3.01 EXAMINATION

A. Verify that survey bench mark and intended elevations for the Work are as indicated.

B. Verify the absence of standing or ponding water.

C. Upon discovery of unknown utility or concealed conditions, discontinue affected Work and notify DSA, Architect and District for direction. Unforeseen conditions shall be resolved in accordance with the General Conditions.

3.02 PREPARATION

A. Identify required lines, levels, contours, and datum.

B. Stake and flag locations of known utilities.

C. Locate, identify, and protect from damage above- and below-grade utilities to remain.
1. Maintain and protect existing utilities remaining which pass through Project area.

D. Notify utility company to remove and relocate utilities, as required.

E. Provide temporary means and methods to remove all standing or ponding water from areas prior to grading.

F. Protect site features to remain, including but not limited to bench marks, survey control points, existing structures, fences, sidewalks, paving, and curbs, from damage by grading equipment and vehicular traffic.

G. Protect trees to remain by providing substantial fencing around entire tree at the outer tips of its branches; no grading is to be performed inside this line.

H. Protect plants, lawns, and other features to remain as a portion of final landscaping.

3.03 ROUGH GRADING

A. Eliminate uneven areas and low spots. Remove debris, roots, branches, stones, in excess of 1 inch in size.

B. Remove topsoil from areas to be further excavated, re-landscaped, or re-graded, without mixing with foreign materials.

1. Coordinate topsoil with Section 10 00 - Site Clearing and Grubbing.

C. Do not remove topsoil when wet.

D. Remove subsoil from areas to be further excavated, re-landscaped, or re-graded.

E. Do not remove wet subsoil , unless it is subsequently processed to obtain optimum moisture content.

F. When excavating through roots, perform work by hand and cut roots with sharp axe.

G. See Section 31 23 23 for filling procedures.

H. All permanent cut or fill slopes shall have a maximum slope of 2:1 (H:V) ratio, horizontal to vertical and shall comply with applicable requirements of the Geotechnical Report and California Building Code (CBC).

I. Benching Slopes: Horizontally bench existing slopes greater than 5:1 (H:V) to key fill material to slope for firm bearing.

J. Stability: Replace damaged or displaced subsoil to same requirements as for specified fill.

K. Remove and replace soils deemed unsuitable by classification and which are excessively moist due to lack surface water control.

L. Grade top perimeter of excavations to prevent surface water from draining into excavation.

1. Provide dewatering of excavations as required to ensure suitable conditions for concrete and backfilling operations.

M. Uniformly grade areas as shown on Drawings to tolerances specified in this Section..

1. Evenly grade between points where elevations are shown or between points of Work and existing grades.

N. Slope rough grade away from building perimeter at gradient indicated.

1. Upaved area slope for a distance of 10 feet from the building: Not less than one unit vertical in 20 units horizontal or 5 percent.

a. CBC Section 1804A.4.

2. When supported by soil conditions and climate; slope not less than 1:48 or 2 percent in unpaved areas.

a. CBC Section 1804A.4, Exception.

O. Make grade changes gradual. Blend slopes into level areas.

3.04 SOIL REMOVAL AND STOCKPILING

A. Stockpile topsoil to be re-used on site; remove remainder from site.

1. Topsoil and vegetation layers, root zones, and similar surface materials should be stripped and stockpiled for either reuse in landscape surface areas or removed from the site.

B. Stockpile subsoil on site for backfill, if soil is appropriate.

1. Stockpile subsoil to depth not exceeding 8 feet.

C. Remove all lumped subsoil, boulders and rock in excess of 3 inches in greatest dimension.

D. Stockpile subsoil to be re-used on site; remove remainder from site.

E. Stockpiles: Use areas designated on site; pile depth not to exceed 8 feet; cover to protect from erosion.

3.05 FINISH GRADING

A. Before Finish Grading:

1. Verify building and trench backfilling have been inspected.
2. Verify subgrade has been contoured and compacted.

B. Remove debris, roots, branches, stones, in excess of 1/2 inch in size. Remove soil contaminated with petroleum products.

1. Comply with CBC Section 1804A.3.

C. Where topsoil is to be placed, scarify surface to depth of 6 inches.

D. In areas where vehicles or equipment have compacted soil, scarify surface to depth of 6 inches.

E. Place topsoil in areas indicated.

F. Place topsoil where required to level finish grade.

G. Place topsoil during dry weather.

H. Remove roots, weeds, rocks, and foreign material while spreading.

I. Near plants spread topsoil manually to prevent damage.

J. Fine grade topsoil to eliminate uneven areas and low spots. Maintain profiles and contour of subgrade.

K. Lightly compact placed topsoil.

L. Maintain stability of topsoil during inclement weather. Replace topsoil in areas where surface water has eroded thickness below specifications.

3.06 TOLERANCES

A. Top Surface of Subgrade: Plus or minus 0.10 foot (1-3/16 inches) from required elevation.

B. Top Surface of Finish Grade: Plus or minus 0.04 foot (1/2 inch).

C. Athletic Field Final Porous Stone base grade: Utilizing laser guided equipment, fine grade to the required tolerances leaving behind no tire tracks or indentations.

D. Top Surface Under Paving: Plus or minus 0.04 foot (1/2 inch) from required elevation.

3.07 REPAIR AND RESTORATION

A. Existing Facilities, Utilities, and Site Features to Remain: If damaged due to this work, repair or replace to original condition.

B. Trees to Remain: If damaged due to this work, trim broken branches and repair bark wounds; if root damage has occurred, obtain instructions from Architect as to remedy.

C. Other Existing Vegetation to Remain: If damaged due to this work, replace with vegetation of equivalent species and size.

3.08 FIELD QUALITY CONTROL

A. Field Quality Control:

1. Field inspections and testing shall be performed in accordance with requirements specified in Section 01 40 00 and 01 45 33.
2. Make required quality control submittals in accordance with requirements specified.

B. Non-compliance: Should grade elevations, tests of fill or backfill indicate non-compliance with required elevations or density, Contractor shall over-excavate, recompact and retest until specified grade or density is obtained.

1. Costs and Time associated with remedial Work and retesting shall be in accordance with provisions of the General Conditions.
2. Retesting to demonstrate compliance shall be by a testing laboratory acceptable to District and shall be at Contractor's expense.

3.09 CLEANING

A. Remove unused stockpiled topsoil and subsoil. Grade stockpile area to prevent standing water.

B. Leave site clean and raked, ready to receive landscaping.

3.10 PROTECTION

A. Protect completed grading from erosion from weather and traffic.

B. Over-excavate and recompact areas damaged by construction activities and weather.

END OF SECTION

SECTION 31 23 16
EXCAVATION

PART 1 GENERAL

1.01 SECTION INCLUDES

A. Excavating for footings, paving, site structures, and utilities within the building.

B. Trenching for utilities outside the building to on-site existing utilities.

C. Temporary excavation support and protection systems.

1.02 RELATED REQUIREMENTS

A. Document 00 31 00 - Available Project Information: Geotechnical report; bore hole locations and findings of subsurface materials.

B. Section 01 40 00 - Quality Requirements: Inspection of bearing surfaces.

C. Section 01 50 00 - Temporary Facilities and Controls: Dewatering excavations and water control.

D. Section 01 70 00 - Execution and Closeout Requirements: Project conditions; protection of bench marks, survey control points, and existing construction to remain; reinstallation of removed products; temporary bracing and shoring. General requirements for dewatering of excavations and water control.

E. Section 02 41 00 - Demolition: Shoring and underpinning existing structures.

F. Section 31 10 00 - Site Clearing: Vegetation and existing debris removal; topsoil removal.

G. Section 31 22 00 - Grading: Grading.

H. Section 31 23 23 - Fill: Fill materials, backfilling, and compacting.

1.03 REFERENCE STANDARDS

A. 29 CFR 1926 - U.S. Occupational Safety and Health Standards.

1.04 REFERENCE STANDARDS

A. ASTM D1557 - Standard Test Methods for Laboratory Compaction Characteristics of Soil Using Modified Effort (56,000 ft-lbf/ft3 (2,700 kN-m/m3)).

1.05 SUBMITTALS

A. See Section 01 30 00 - Administrative Requirements, for submittal procedures.

B. Temporary Support and Excavation Protection Plan.

C. Project Record Documents: Record drawings at project closeout according to 01 70 00 - Execution and Closeout Requirements. Show locations of installed support materials left in place, including referenced locations and depths, on drawings.

D. Shoring Installer's Qualification Statement.

E. Field Quality Control Submittals: Document visual inspection of load-bearing excavated surfaces.

1.06 QUALITY ASSURANCE

A. Temporary Support and Excavation Protection Plan:

1. Indicate sheeting, shoring, and bracing materials and installation required to protect excavations and adjacent structures and property.
2. Include drawings and calculations for bracing and shoring.
3. Bracing and shoring design to meet requirements of OSHA's Excavation Standard, 29 CFR 1926, Subpart P.

B. Designer Qualifications: For design of temporary shoring and bracing, employ a Professional Engineer experienced in design of this type of work and licensed in California.

C. Shoring Installer Qualifications: Company specializing in performing the shoring and bracing work of this section with minimum five years of documented experience.

1.07 COORDINATION OF SPECIFICATION REQUIREMENTS

A. Coordinate these Specification Section requirements with specifications included on Drawings. Comply with more stringent requirements and with those requirements of authorities having jurisdiction.

B. Comply in full with the direction (recommendations) given in the Geotechnical Report.

PART 2 PRODUCTS

2.01 MATERIALS

A. Bedding and Fill to Correct Over-Excavation:

1. See Section 31 23 23 for bedding and corrective fill materials at general excavations.

PART 3 EXECUTION

3.01 DIG ALERT NOTIFICATION

A. Before any excavation in or near the public right-of-way, contact the Underground Service Alert of Southern California (Dig Alert) at 811 for information on buried utilities and pipelines.

B. Delineation of the proposed excavation site is mandatory. Mark the area to be excavated with water soluble or chalk based white paint on paved surfaces or with other suitable markings such as flags or stakes on unpaved areas.

C. Call at least Two (2) full working days prior to digging.

D. If the members (utility companies) have facilities within the work area, they will mark them prior to the start of your excavation and if not, they will let you know there is no conflict. A different color is used for each utility type (electricity is marked in red, gas in yellow, water in blue, sewer in green, telephone and cable TV in orange).

E. The Law requires to hand expose to the point of no conflict 24 inches on either side of the underground facility, to know its exact location before using power equipment.

F. If caught digging without a Dig Alert ticket fines can be as much as $50,000 per California government code 4216.

3.02 EXAMINATION

A. Verify that survey bench mark and intended elevations for the work are as indicated.

B. Survey existing adjacent structures and improvements and establish exact elevations at fixed points to act as benchmarks.

   1. Resurvey benchmarks during installation of excavation support and protection systems and notify District if any changes in elevations or positions occur or if cracks, sags, or other damage is evident in adjacent construction.

C. Determine the prevailing groundwater level prior to excavation. If the proposed excavation extends less than 1 foot into the prevailing groundwater, control groundwater intrusion with perimeter drains routed to sump pumps, or as directed by Architect. If the proposed excavation extends more than 1 foot into the prevailing groundwater, control groundwater intrusion with a comprehensive dewatering procedures, or as directed by Geotechnical Engineer.

3.03 PREPARATION

A. Identify required lines, levels, contours, and datum locations.

B. See Section 31 10 00 for clearing, grubbing, and topsoil removal.

C. Locate, identify, and protect utilities that remain and protect from damage.

D. Protect bench marks, survey control points, existing structures, fences, sidewalks, paving, and curbs from excavating equipment and vehicular traffic.

E. Grade top perimeter of excavation to prevent surface water from draining into excavation. Provide temporary means and methods, as required, to maintain surface water diversion until no longer needed, or as directed by Architect.

F. See Sections 01 70 00 and 02 41 00 for underpinning and shoring of adjacent structures that could be damaged by excavating work.

3.04 TEMPORARY EXCAVATION SUPPORT AND PROTECTION

A. Excavation Safety: Comply with OSHA's Excavation Standard, 29 CFR 1926, Subpart P.

   1. Excavations in stable rock or in less than 5 feet in depth in ground judged as having no cave-in potential do not require excavation support and protection systems.

   2. Depending upon excavation depth, time that excavation is open, soil classification, configuration and slope of excavation sidewalls, design and provide an excavation support and protection system that meets the requirements of 29 CFR 1926, Subpart P:

      a. Sloping and benching systems.

      b. Support systems, shield systems, and other protective systems.

B. Shoring Design: Comply with State of California Trenching and Shoring Manual issued by Offices of Structure Construction; 2011.

   1. Provide all materials and services necessary to properly engineer and construct shoring for excavations. Selection of materials and design of shoring, underpinning and bracing of new and existing structures shall be solely the responsibility of the Contractor.

C. Underpin adjacent structures that could be damaged by excavating work, including utilities and pipe chases.

D. Protect excavations from cave-in and from loose soil and other matter from falling in.

E. Leave excavation support and protection systems, used as formwork or within 10 feet of existing foundations, permanently in place, unless otherwise noted.

1. Cut off top 4 feet below grade, abandon remainder.

F. Excavation support and protection systems not required to remain in place may be removed subject to approval of District or District's Representative.

1. Remove temporary shoring and bracing in a manner to avoid harmful disturbance to underlying soils and damage to buildings, structures, pavements, facilities and utilities.

3.05 EXCAVATING

A. Excavate to accommodate new structures, paving/site structures, construction operations, and paving/site structures.

1. Excavate to the specified elevations.
2. Excavate to the length and width required to safely install, adjust, and remove any forms, bracing, or supports necessary for the installation of the work.
3. Cut utility trenches wide enough to allow inspection of installed utilities.
4. Hand trim excavations. Remove loose matter.
5. Excavate subsoil from areas to be filled with structural fill, to construct foundations, footings, slabs on grade, paving and to achieve final finish grades.
6. Over-excavate to working elevations for backfilling and compaction operations.
7. Specific Site / Geotechnical requirements: See the geotechnical report for detailed requirements.

a. Building Footprint:

1) Within the footprint of proposed buildings, remove/over-excavate and recompact the upper 2 feet of soils below existing grade, or 1.5 feet below bottom of footings/slab-on-grade, whichever is deeper.

2) Extend over-excavation and recompaction a minimum horizontal distance of 5 feet from perimeter edges of proposed buildings.

3) Localized areas of deeper removals/over-excavation may be required depending on the actual conditions encountered pending verification by the geotechnical engineer during grading to confirm suitable bottom.

b. Flatwork/Hardscape/Pavement

1) In areas of proposed concrete flatwork or pavement, provide a minimum over-excavation and recompaction of 12 inches below existing grade or 12 inches below proposed subgrade elevation, whichever is deeper.

2) Extend over-excavation and recompaction a minimum horizontal distance of 2 feet from outside hardscape limits.

3) Proof-roll the bottom of the removal with heavy equipment to identify yielding subgrade conditions (for additional removal, if necessary) under the observation of the geotechnical consultant.

c. After completion of the removal of existing fill soils and prior to fill placement, scarify the exposed surface to a minimum depth of 8 inches, moisture condition as necessary to near optimum moisture content and recompact using heavy compaction equipment to an unyielding condition.

d. Compact all structural fill within the building footprints throughout to at least 90 percent of the ASTM D1557 laboratory maximum density, at or slightly above optimum moisture.

e. Compact all fill within the pavement and hardscape area throughout to at least 90 percent of the ASTM D1557 laboratory maximum density, at or slightly above optimum moisture..

8. Where excavations are made to a depth greater than that indicated, such additional depth shall be filled with concrete having the same compressive strength as specified for the footing.

a. Correct unauthorized and erroneous excavation at no change in Contract Time or Contract Sum.

b. All over-excavations should extend to a depth where the project geologist, engineer or his representative has deemed the exposed soils as being suitable for receiving compacted fill. The materials exposed at the bottom of excavations should be observed by a representative of the geotechnical engineer or geologist from our office prior to the placement of any compacted fill soils to verify that all old fill is removed. Additional removals may be required as a result of observation and/or testing of the exposed subgrade subsequent to the required over-excavation.

B. Notify Architect of unexpected subsurface conditions and discontinue affected Work in area until notified to resume work.

C. Slope banks of excavations deeper than 4 feet to angle of repose or less until shored, per CalOSHA requirements for Type C Soil.

1. Machine slope banks of excavations to minimum 1 to 1 ratio horizontal to vertical or angle of repose, if less, until shored.

a. Exception: If authorized in writing by Geotechnical Engineer.

b. Slope must comply with local codes, ordinances and requirements of agencies having jurisdiction.

D. Do not interfere with 45 degree influence line of bearing splay of foundations.

1. Avoid interference at footings by providing additional width, depth, and other provisions.

E. Remove lumped subsoil, boulders, and rock up to 1/3 cu yd measured by volume.

F. Provide temporary means and methods, as required, to remove all water from excavations until directed by Architect. Remove and replace soils deemed suitable by classification and which are excessively moist due to lack of dewatering or surface water control.

3.06 SUBGRADE PREPARATION

A. See Section 31 23 23 for subgrade preparation at general excavations.

3.07 FILLING AND BACKFILLING

A. Do not fill or backfill until all debris, water, unsatisfactory soil materials, obstructions, and deleterious materials have been removed from excavation.

B. See Section 31 23 23 for fill, backfill, and compaction requirements at general excavations.

C. See Section 31 22 00 for rough and fine grading.

3.08 REPAIR

A. Correct areas that are over-excavated and load-bearing surfaces that are disturbed; see Section 31 23 23 at no additional cost.

3.09 FIELD QUALITY CONTROL

A. See Section 01 40 00 - Quality Requirements, for general requirements for field inspection and testing.

B. Provide for visual inspection of load-bearing excavated surfaces by Architect and geotechnical consultant before placement of foundations.

C. Scarification, over excavation and all other excavations will be subject to the approval of the Geotechnical Engineer.

3.10 CLEANING

A. Stockpile excavated material to be re-used in area designated on site in accordance with Section 31 22 00.

B. Remove excavated material that is unsuitable for re-use from site.

C. Remove excess excavated material from site.

1. Geotechnical engineer or other consultant as selected by District to test soils prior to export for disposition.

3.11 PROTECTION

A. Divert surface flow from rains or water discharges from the excavation.

B. Prevent displacement of banks and keep loose soil from falling into excavation; maintain soil stability.

C. Protect open excavations from rainfall, runoff, freezing groundwater, or excessive drying so as to maintain foundation subgrade in satisfactory, undisturbed condition.

D. Protect bottom of excavations and soil adjacent to and beneath foundation from freezing.

E. Keep excavations free of standing water and completely free of water during concrete placement.

END OF SECTION

SECTION 31 23 16.13
TRENCHING

PART 1 GENERAL

1.01 SECTION INCLUDES

A. Backfilling and compacting for utilities from 5 FEET outside the building to connection point on-site, where indicated on Drawings.

1.02 RELATED REQUIREMENTS

A. Section 01 41 00 - Regulatory Requirements: Code Compliance.

B. Section 31 22 00 - Grading: Site grading.

1.03 DEFINITIONS

A. Finish Grade Elevations: Indicated on drawings.

B. Subgrade Elevations: Indicated on drawings.

1.04 REFERENCES

A. ASTM C136/C136M - Standard Test Method for Sieve Analysis of Fine and Coarse Aggregates.

B. ASTM D2487 - Standard Practice for Classification of Soils for Engineering Purposes (Unified Soil Classification System).

1.05 SUBMITTALS

A. See Section 01 30 00 - Administrative Requirements, for submittal procedures.

B. Fill Composition Test Reports: Results of laboratory tests on proposed and actual materials used.

C. Compaction Density Test Reports.

1.06 COORDINATION OF SPECIFICATION REQUIREMENTS

A. Coordinate these Specification Section requirements with specifications included on Drawings. Comply with more stringent requirements and with those requirements of the authorities having jurisdiction.

1.07 DELIVERY, STORAGE, AND HANDLING

A. When necessary, store materials on site in advance of need.

B. When fill materials need to be stored on site, locate stockpiles where designated.

1. Separate differing materials with dividers or stockpile separately to prevent intermixing.
2. Prevent contamination.
3. Protect stockpiles from erosion and deterioration of materials.

PART 2 PRODUCTS

2.01 FILL MATERIALS

A. General Fill: Subsoil excavated on-site.

B. Structural Fill: Subsoil excavated on-site.

1. Free of lumps larger than 3 inches, rocks larger than 2 inches, and debris.

C. Concrete for Fill: Lean concrete.

D. Granular Fill - Gravel: Pit run washed stone; free of shale, clay, friable material and debris.

1. Graded in accordance with ASTM C136/C136M, within the following limits:

a. 3/4 inch sieve: 95 to 100 percent passing.

E. Granular Fill - Pea Gravel: Natural stone; washed, free of clay, shale, organic matter.

1. Grade in accordance with ASTM D2487 Group Symbol GM.

F. Sand: Natural river or bank sand; washed; free of silt, clay, loam, friable or soluble materials, and organic matter.

1. Grade in accordance with ASTM D2487 Group Symbol SW.

G. Topsoil: Topsoil excavated on-site.

1. Select.
2. Graded.
3. Free of roots, rocks larger than 1/2 inch, subsoil, debris, large weeds and foreign matter.
4. Acidity range (pH) of 5.5 to 7.5.
5. Containing a minimum of 4 percent and a maximum of 25 percent inorganic matter.
6. Complying with ASTM D2487 Group Symbol OH.

2.02 SOURCE QUALITY CONTROL

A. See Section 01 40 00 - Quality Requirements, for general requirements for testing and analysis of soil material.

B. Where fill materials are specified by reference to a specific standard, test and analyze samples for compliance before delivery to site.

C. If tests indicate materials do not meet specified requirements, change material and retest.

D. Provide materials of each type from same source throughout the Work.

PART 3 EXECUTION

3.01 DIG ALERT NOTIFICATION

A. Before any excavation in or near the public right-of-way, contact the Underground Service Alert of Southern California (Dig Alert) at 811 for information on buried utilities and pipelines.

B. Delineation of the proposed excavation site is mandatory. Mark the area to be excavated with water soluble or chalk based white paint on paved surfaces or with other suitable markings such as flags or stakes on unpaved areas.

C. Call at least Two (2) full working days prior to digging.

D. If the members (utility companies) have facilities within the work area, they will mark them prior to the start of your excavation and if not, they will let you know there is no conflict. A different color is used for each utility type (electricity is marked in red, gas in yellow, water in blue, sewer in green, telephone and cable TV in orange).

E. The Law requires to hand expose to the point of no conflict 24 inches on either side of the underground facility, to know its exact location before using power equipment.

F. If caught digging without a Dig Alert ticket fines can be as much as $50,000 per California government code 4216.

3.02 EXAMINATION

A. Verify that survey bench marks and intended elevations for the work are as indicated.

3.03 PREPARATION

A. Identify required lines, levels, contours, and datum locations.

B. Locate, identify, and protect utilities that remain and protect from damage.

C. Protect bench marks, survey control points, existing structures, fences, sidewalks, paving, and curbs from excavating equipment and vehicular traffic.

D. Protect plants, lawns, rock outcroppings, and other features to remain.

E. Grade top perimeter of trenching area to prevent surface water from draining into trench. Provide temporary means and methods, as required, to maintain surface water diversion until no longer needed, or as directed by the Architect.

3.04 TRENCHING

A. Excavate subsoil required for conduits, storm drain, sanitary sewer, water and gas piping to municipal utilities.

B. Notify Architect of unexpected subsurface conditions and discontinue affected Work in area until notified to resume work.

C. Slope banks of excavations deeper than 4 feet to angle of repose or less until shored.

D. Trenches Parallel to Footings: Do not place the trench below a 1 vertical to 2 horizontal from 9 inches above the bottom edge of the footing and no closer than 18 inches from the face of footing. CBC Section 1809A.14.

E. Do not interfere with 45 degree bearing splay of foundations.

F. Cut trenches wide enough to allow inspection of installed utilities.

G. Hand trim excavations. Remove loose matter.

1. Hand trim for bell and spigot pipe joints.

H. Remove large stones and other hard matter that could damage piping or impede consistent backfilling or compaction.

I. Remove lumped subsoil, boulders, and rock up to 1/3 cubic yard measured by volume.

J. Remove excavated material that is unsuitable for re-use from site.

K. Stockpile excavated material to be re-used in area designated in Section 31 22 00.

L. Remove excess excavated material from site.

M. Provide temporary means and methods, as required, to remove all water from trenching until directed by the Architect. Remove and replace soils deemed unsuitable by classification and which are excessively moist due to lack of dewatering or surface water control.

N. Determine the prevailing groundwater level prior to trenching. If the proposed trench extends less than 1 foot into the prevailing groundwater, control groundwater intrusion with perimeter drains routed to sump pumps, or as directed by the Architect.

3.05 PREPARATION FOR UTILITY PLACEMENT

A. Cut out soft areas of subgrade not capable of compaction in place. Backfill with general fill.

B. Compact subgrade to density equal to or greater than requirements for subsequent fill material.

C. Until ready to backfill, maintain excavations and prevent loose soil from falling into excavation.

D. Support pipe and conduit during placement and compaction of bedding fill.

3.06 BACKFILLING

A. Backfill to contours and elevations indicated using unfrozen materials.

B. Fill up to subgrade elevations unless otherwise indicated.

C. Employ a placement method that does not disturb or damage installed piping and conduits, or other work.

D. Systematically fill and compact as as to achieve 90 percent relative compaction without damaging conduit or pipe. Do not fill over porous, wet, frozen or spongy subgrade surfaces.

E. Maintain optimum moisture content of fill materials to attain required compaction density.

F. Granular Fill: Place and compact materials in equal continuous layers not exceeding 6 inches compacted depth.

G. Soil Fill: Place and compact material in equal continuous layers not exceeding 8 inches compacted depth or as directed by the Geotechnical Report.

H. Slope grade away from building minimum 2 inches in 10 feet, unless noted otherwise. Make gradual grade changes. Blend slope into level areas.

I. Correct areas that are over-excavated.

   1. Thrust bearing surfaces: Fill with concrete.

   2. Other areas: Use general fill, flush to required elevation, compacted to minimum 90 or 95 percent of maximum dry density as applicable for the fill area.

J. Compaction Density Unless Otherwise Specified or Indicated:

   1. Under paving and similar construction: 95 percent of maximum dry density.

   2. At other locations: 90 percent of maximum dry density.

K. Reshape and re-compact fills subjected to vehicular traffic.

3.07 BEDDING AND FILL AT SPECIFIC LOCATIONS

A. Use general fill unless otherwise specified or indicated.

B. Utility Piping, Conduits, and Duct Bank:

1. Bedding: Use Fill Type SP or SW (ASTM D2487) or SM with sand equivalent of 30 or greater per ASTM D2419, 3 inches thick, compacted to 90 percent..
2. Cover with Fill Type SP, SW, SM, GM per ASTM D2487.
3. Fill up to subgrade elevation.
4. Compact in maximum 8 inch lifts to 95 percent of maximum dry density.

3.08 TOLERANCES

A. Top Surface of General Backfilling: Plus or minus 1.2 inch from required elevations.

B. Top Surface of Backfilling Under Paved Areas: Plus or minus 1.2 inch from required elevations.

3.09 FIELD QUALITY CONTROL

A. See Section 01 40 00 - Quality Control, for general requirements for field inspection and testing.

B. Perform compaction density testing on compacted fill in accordance with ASTM D1556 or ASTM D6938.

C. Correct unauthorized excavation at no cost to District.

D. Evaluate results in relation to compaction curve determined by testing uncompacted material in accordance with ASTM D1557 ("modified Proctor"), AASHTO T 180, or ASTM D698 ("standard Proctor").

E. If tests indicate work does not meet specified requirements, remove work, replace and retest at no additional cost to District.

F. Frequency of Tests: See Section 31 22 00 - Grading.

3.10 CLEANING

A. Leave unused materials in a neat, compact stockpile.

B. Remove unused stockpiled materials, leave area in a clean and neat condition. Grade stockpile area to prevent standing surface water.

C. Leave borrow areas in a clean and neat condition. Grade to prevent standing surface water.

3.11 PROTECTION OF FINISHED WORK

A. Protect finished Work under provisions of Section 01 50 00 - Temporary Construction Facilities and Controls.

B. Recompact fills subjected to vehicular traffic.

END OF SECTION

SECTION 31 23 23
FILL

PART 1 GENERAL

1.01 SECTION INCLUDES

A. Filling, backfilling, and compacting for footings, paving, site structures, and utilities within the building.

B. Backfilling and compacting for utilities outside the building to on-site utility connections.

1.02 RELATED REQUIREMENTS

A. Section 03 30 00 - Cast-in-Place Concrete.

B. Section 31 22 00 - Grading: Site grading.

C. Section 31 23 16 - Excavation: Removal and handling of soil to be re-used.

1.03 DEFINITIONS

A. Finish Grade Elevations: Indicated on drawings.

B. Subgrade Elevations: Indicated on drawings.

1.04 REFERENCE STANDARDS

A. ASTM D1556/D1556M - Standard Test Method for Density and Unit Weight of Soil in Place by Sand-Cone Method.

B. ASTM D1557 - Standard Test Methods for Laboratory Compaction Characteristics of Soil Using Modified Effort (56,000 ft-lbf/ft3 (2,700 kN-m/m3)).

C. ASTM D2487 - Standard Practice for Classification of Soils for Engineering Purposes (Unified Soil Classification System).

A. ASTM D4829 - Standard Test Method for Expansion Index of Soils.

B. ASTM D6938 - Standard Test Methods for In-Place Density and Water Content of Soil and Soil-Aggregate by Nuclear Methods (Shallow Depth).

C. DTSC-Clean Fill - California Department of Toxic Substances Control - Clean Imported Fill Material.

D. Greenbook - Greenbook: Standard Specifications for Public Works Construction.

1.05 SUBMITTALS

A. See Section 01 30 00 - Administrative Requirements, for submittal procedures.

B. Soil Samples: 10 pounds sample of each type of fill; submit in air-tight containers to testing laboratory.

   1. Submit samples directly to Geotechnical Engineer for testing and analysis copy transmittals to Architect and District.

C. Materials Sources: Submit name of imported materials source.

D. Fill Composition Test Reports: Results of laboratory tests on proposed and actual materials used, including manufactured fill.

E. Compaction Density Test Reports.

F. Manufacturer's Instructions.

G. Manufacturer's Qualification Statement.

H. Specimen Warranty.

I. Provide proof that all imported materials conform to the requirements of DTSC-Clean Fill Imported Fill Materials for School Sites by proper documentation for the imported materials.

1.06 QUALITY ASSURANCE

A. Manufacturer Qualifications: Company specializing in manufacturing products specified in this section, with not less than ten years of documented experience.

B. Testing Agency Qualifications: Independent firm specializing in performing testing and inspections of the type specified in this section.

C. Copies of Documents at Project Site: Maintain at the project site a copy of each referenced document that prescribes execution requirements.

1.07 DELIVERY, STORAGE, AND HANDLING

A. When necessary, store materials on site in advance of need.

B. When fill materials need to be stored on site, locate stockpiles where agreed to.

1. Separate differing materials with dividers or stockpile separately to prevent intermixing.
2. Prevent contamination.
3. Protect stockpiles from erosion and deterioration of materials.

1.08 WARRANTY

A. See Section 01 78 00 - Closeout Submittals, for additional warranty requirements.

B. Correct defective Work within a five year period after Date of Substantial Completion.

PART 2 PRODUCTS

2.01 FILL MATERIALS

A. All fill materials will be in conformance with the Soils Report, addenda and geotechnical data indicated in Section 00 31 00 - Available Project Information.

B. General Fill: Subsoil excavated on-site.

1. Graded.
2. Free of lumps larger than 3 inches, rocks larger than 3 inches, and debris.
3. Complying with ASTM D2487 Group Symbol CL.

C. Structural Fill: Subsoil excavated on-site.

1. Graded.

2. Free of organic matter, debris, and oversize particles (e.g., cobbles, rubble, etc. that are larger than 3 inches, rocks larger than 3 inches. Fill shall contain at least fifty percent of material smaller than 1/4 inch in size.
3. Imported fill materials: The soil shall be tested for potential contamination in accordance with DTSC-Clean Fill protocols. Submit to Geotechnical Engineer.
    a. Import sandy soil shall be free of organics, debris and oversize particles (e.g., cobbles, rubble, rocks, etc. that are greater than 3 inches in the largest dimension).
    b. Additionally, import soils shall not have any corrosion impacts to buried concrete; and be non-expansive (Expansion Index less than 21 per ASTM D4829).
    c. Prior to import, geotechnical consultant shall evaluate and test the import soils in order to confirm the quality of the material.
4. On-site soils should only be used as specified in the Soils Report.
5. Complying with ASTM D2487 Group Symbol CL.

D. Concrete for Fill: See Section 03 30 00; compressive strength of 2,500 psi.
    1. Exception: Concrete used under footings and foundations to correct over-excavation shall be same as for footings and foundation.

E. Granular Fill- Fill Type GM, GW: Coarse aggregate, conforming to Uniform Standard Specifications for Public Works Construction Off-Site Improvements standard.

F. Granular Fill - Pea Gravel: Natural stone; washed, free of clay, shale, organic matter.
    1. Grade in accordance with ASTM D2487 Group Symbol GP.

G. Sand: Natural river or bank sand; free of silt, clay, loam, friable or soluble materials, and organic matter.
    1. Grade in accordance with ASTM D2487 Group Symbol SP or SW.

H. Type F - Subsoil: Reused, free of rocks larger than 3 inch size, and debris.
    1. Existing fill and alluvium or older alluvium may be considered suitable for re-use as compacted fills provided the recommendations of the geotechnical report and observations of the geotechnical engineer are followed.

2.02 ACCESSORIES

A. Geotextile Fabric: Non-biodegradable, non-woven; Geotex 801 manufactured by Propex Geotextile Systems, geotextile.com.

2.03 SOURCE QUALITY CONTROL

A. See Section 01 40 00 - Quality Requirements, for general requirements for testing and analysis of soil material.

B. Where fill materials are specified by reference to a specific standard, test and analyze samples for compliance before delivery to site.

C. If tests indicate materials do not meet specified requirements, change material and retest.

D. Provide materials of each type from same source throughout the Work.

E. Comply with EPA/DTSC-Clean Fill requirements.

PART 3 EXECUTION

3.01 EXAMINATION

A. Verify structural or other backfill materials to be reused or imported are acceptable to the satisfaction of the Geotechnical Engineer. Approval shall be obtained in advance of re-use or importation onto the site.

1. Test soil for potential contamination in accordance with DTSC-Clean Fill protocols.
2. Provide imported fill materials compatible with on-site soils in addition to being suitable for its intended use with the following criterion, as allowed by the Geotechnical Engineer.
   a. Predominantly granular in nature.
   b. Containing no rocks larger than 3 inches maximum dimension.
   c. Free of organic material (loss on ignition less-than 2 percent).
   d. Very low expansion potential (with an Expansion Index less than 21).
   e. Low corrosion impact to the proposed improvements.

B. Verify that survey bench marks and intended elevations for the Work are as indicated.

C. Identify required lines, levels, contours, and datum locations.

D. See Section 31 22 00 for additional requirements.

E. Verify subdrainage, dampproofing, or waterproofing installation has been inspected.

F. Verify structural ability of unsupported walls to support imposed loads by the fill.

G. Verify areas to be filled are not compromised with surface or ground water.

3.02 PREPARATION

A. Scarify and proof roll subgrade surface to a depth of 8 inches to identify soft spots.

B. Cut out soft areas of subgrade not capable of compaction in place. Backfill with AWS D1.4/D1.4M Type II or concrete fill and compact to density equal to or greater than requirements for subsequent backfill material.

C. Compact subgrade to density equal to or greater than requirements for subsequent fill material.

D. Prior to placement of aggregate base course material at paved areas, compact subsoil to 95 percent of its maximum dry density in accordance with ASTM D1557.

E. Until ready to fill, maintain excavations and prevent loose soil from falling into excavation.

3.03 FILLING

A. Fill to contours and elevations indicated using unfrozen materials.

B. Fill up to subgrade elevations unless otherwise indicated.

1. Place fill soils compacted in horizontal lifts to a relative compaction of 90 percent or more in general accordance with ASTM D1557.
2. Lift thickness for fill soils will vary depending on the type of compaction equipment used but should generally be placed in horizontal lifts not exceeding 8 inches in loose thickness.

3. Place fill soils at slightly above optimum moisture content as evaluated by ASTM D1557.
4. Avoid damage to wet and dry utility lines when compacting fill and subgrade materials.

C. Employ a placement method that does not disturb or damage other work.
1. Do not disturb or damage foundation perimeter drainage and foundation waterproofing and protective cover utilities in trenches.

D. Systematically fill and compact per geotechnical report. Do not fill over porous, wet, frozen or spongy subgrade surfaces.

E. Maintain optimum moisture content of fill materials to attain required compaction density.

F. Granular Fill: Place and compact materials in equal continuous layers not exceeding 6 inches compacted depth.

G. Soil Fill: Place and compact material in equal continuous layers not exceeding 8 inches compacted depth.
1. Expansive soils (EI>20) are not be placed with the upper 3 feet of subgrade soils. CBC Section 1803A.5.3.

H. Slope grade away from building minimum 2 inches in 10 feet, unless noted otherwise. Make gradual grade changes. Blend slope into level areas.

I. Correct areas that are over-excavated.
1. Load-bearing foundation surfaces: Fill with concrete.
2. Other areas: Use general fill, flush to required elevation, compacted to minimum 90 or 95 percent of maximum dry density in subgrade zone.

J. Compaction Density Unless Otherwise Specified or Indicated:
1. Under paving, slabs-on-grade, and similar construction: 90 percent of maximum dry density.
2. At upper 12 inches beneath vehicular pavements: 95 percent of maximum dry density.
3. At other locations: At least 90 percent of maximum dry density.

K. Reshape and re-compact fills subjected to vehicular traffic.

L. Maintain temporary means and methods, as required, to remove all water while fill is being placed as required, or until directed by the Architect. Remove and replace soils deemed unsuitable by classification and which are excessively moist due to lack of dewatering or surface water control.

M. Remove surplus fill and backfill materials from site.

3.04 FILL AT SPECIFIC LOCATIONS

A. Use general fill unless otherwise specified or indicated.

B. Structural Fill:
1. Use general fill.
2. Fill up to subgrade elevations.
3. Maximum depth per lift: 6 inches, compacted.
4. Compact to minimum at least 90 percent of maximum dry density.

C. Over Buried Utility Piping, Conduits, and Duct Bank in Trenches:

1. Bedding: Use general fill.
2. Cover with general fill.
3. Fill up to subgrade elevation.
4. Compact in maximum 8 inch lifts to at least 90 percent of maximum dry density. Compact to at least 95 percent in subgrade zone.

D. At Planting Areas Other Than Lawns :
1. Use general fill.
2. Fill up to finish grade elevations.
3. Compact to at least 90 percent of maximum dry density.

E. Under Monolithic Paving :
1. Compact subsoil to at least 90 percent of its maximum dry density before placing fill.
2. Use general fill.
3. Fill up to subgrade elevation.
4. Compact to at least 90 percent of maximum dry density; , 95 percent in upper 12 inches.
5. See Section 32 11 23 for aggregate base course placed over fill.

3.05 TOLERANCES

A. Top Surface of General Filling: Plus or minus 1 inch from required elevations.

B. Top Surface of Filling Under Paved Areas: Plus or minus 1/2 inch from required elevations.

3.06 FIELD QUALITY CONTROL

A. See Section 01 40 00 - Quality Requirements, for general requirements for field inspection and testing.
1. Laboratory Tests and Analyses: Where backfill is required to be compacted to a specified density, tests for compliance shall be made in accordance with requirements specified in Section 01 40 00 - Quality Requirements.

B. Perform compaction density testing on compacted fill in accordance with ASTM D1556 or ASTM D6938.
1. Field inspections and testing shall be performed and submitted in accordance with requirements specified in Section 01 40 00 - Quality Requirements.
2. Allow testing service to inspect and approve each subgrade and fill layer before further fill, backfill or construction Work is performed.
3. Alternate Density Test Method:
   a. Field density tests may also be performed by the nuclear method in accordance with ASTM D6938, providing that calibration curves are periodically checked and adjusted to correlate to tests performed using ASTM D1556/D1556M.
   b. In conjunction with each density calibration check, check the calibration curves furnished with the moisture gages in accordance with ASTM D6938.

c. If field tests are performed using nuclear methods, make calibration checks of both density and moisture gages at beginning of Work, on each different type of material encountered, and at intervals as directed by Architect or District's testing and inspection agency.

C. Evaluate results in relation to compaction curve determined by testing uncompacted material in accordance with ASTM D 1557 ("modified Proctor") or AASHTO T 180.

D. Non-compliance: If tests indicate work does not meet specified requirements, remove work, replace and retest.

1. Should tests of fill or backfill indicate non-compliance with required density, Contractor shall over-excavate, recompact and retest until specified density is obtained.
2. Costs and Time associated with remedial Work and retesting shall be in accordance with provisions of the General Conditions.
3. Retesting to demonstrate compliance shall be by a testing laboratory acceptable to District and shall be at Contractor's expense.

E. Frequency of Tests:

1. Footing Subgrade Testing:
   a. For each strata of soil on which footings will be placed, perform at least one in-place density test to verify required design bearing capacities.
   b. Subsequent verification and approval of each footing subgrade may be based on a visual comparison of each subgrade with related tested strata when acceptable to Geotechnical Engineer.
2. Paved Areas and Building Slab Subgrade Testing:
   a. Perform at least one field density test of subgrade for every 2,000 sf of paved area or building slab, but in no case fewer than three tests.
   b. In each compacted fill layer, perform one field density test for every 2,000 sf of overlaying building slab or paved area, but in no case fewer than three tests.
3. Foundation Wall Backfill Testing: Perform at least two field density tests at locations and elevations as directed.

F. Proof roll compacted fill at surfaces that will be under slabs-on-grade.

3.07 CLEANING

A. See Section 01 74 19 - Construction Waste Management and Disposal, for additional requirements.

B. Remove unused stockpiled materials, leave area in a clean and neat condition. Grade stockpile area to prevent standing surface water.

C. Leave borrow areas in a clean and neat condition. Grade to prevent standing surface water.

END OF SECTION

SECTION 32 11 23
AGGREGATE BASE COURSES

PART 1 GENERAL

1.01 SECTION INCLUDES

A. Aggregate base course.

B. Paving aggregates.

C. Soil sterilization.

1.02 RELATED REQUIREMENTS

A. Section 31 22 00 - Grading: Preparation of site for base course.

B. Section 32 12 16 - Asphalt Paving: Finish and binder asphalt courses.

1.03 REFERENCE STANDARDS

A. AASHTO T 180 - Standard Method of Test for Moisture-Density Relations of Soils Using a 4.54-kg (10-lb) Rammer and a 457-mm (18-in.) Drop.

B. ASTM D698 - Standard Test Methods for Laboratory Compaction Characteristics of Soil Using Standard Effort (12,400 ft-lbf/ft3 (600 kN-m/m3)).

C. ASTM D1556/D1556M - Standard Test Method for Density and Unit Weight of Soil in Place by Sand-Cone Method.

D. ASTM D1557 - Standard Test Methods for Laboratory Compaction Characteristics of Soil Using Modified Effort (56,000 ft-lbf/ft3 (2,700 kN-m/m3)).

E. ASTM D2487 - Standard Practice for Classification of Soils for Engineering Purposes (Unified Soil Classification System).

F. ASTM D6938 - Standard Test Methods for In-Place Density and Water Content of Soil and Soil-Aggregate by Nuclear Methods (Shallow Depth).

G. SSPWC (Greenbook) - Standard Specifications for Public Works Construction.

1.04 SUBMITTALS

A. See Section 01 30 00 - Administrative Requirements for submittal procedures.

B. Samples: 10 lb sample of each type of aggregate; submit in air-tight containers to testing laboratory.

C. Materials Sources: Submit name of imported materials source.

D. Certificates of Conformance: Aggregate and sterilant materials.

E. Installer's Qualification Statement.

F. Aggregate Composition Test Reports: Results of laboratory tests on proposed and actual materials used.

G. Compaction Density Test Reports.

1.05 QUALITY ASSURANCE

A. Regulatory Requirements: Where reference is made to Standard Specifications, the following shall apply.

1. Perform off-site Work in public rights-of-way in accordance with requirements of authorities having jurisdiction, including SSPWC (Greenbook). For conditions not indicated otherwise on Contract Drawings, conform to Standard Details adopted by authorities having jurisdiction.
2. Perform on-site Work as indicated and referenced on Contract Drawings and as specified herein.

B. The quantity of volatile organic compounds (VOC) used in weed killer, tack coat, primer and other materials shall not exceed limits permitted under current regulations of:

1. South Coast Air Quality Management District (AQMD).

C. Source Quality Control: Obtain materials from one source throughout.

1.06 DELIVERY, STORAGE, AND HANDLING

A. When necessary, store materials on site in advance of need.

B. When aggregate materials need to be stored on site, locate where directed by District.

C. Aggregate Storage, General:

1. Separate differing materials with dividers or stockpile separately to prevent intermixing.
2. Prevent contamination.
3. Protect stockpiles from erosion and deterioration of materials.

PART 2 PRODUCTS

2.01 MATERIALS

A. Aggregate Type Class II: Coarse or crushed aggregate, conforming to Municipality, SSPWC Section 200-2.2..

B. Herbicide: Comply with all applicable environmental protection and hazardous materials laws and regulations .

1. Comply with current EPA acceptable standard and the California Department of Pesticide Regulations for soils sterilant.
2. Comply with the "Healthy Schools Act" as amended in 2014.
3. Obtain product approval from District, prior to purchase and use.
4. Sterilant: Commercial grade for commercial application.
   a. Selected as appropriate for the environment in which is it to be placed.
5. Contractor shall be licensed with the State of California to apply sterilant.
6. Sterilant: Commercial grade for commercial application.
7. Payment for soil sterilization: Include full compensation for application and all materials and incidental work required.
8. Application Rate: Follow manufacturer recommendations.
9. Acceptable Manufacturers:

a. Dow AgroSciences; Spike 80DF: www.dowagro.com.
b. Pro-Serve Inc.; Bare-Spot Monobor-Chlorate: www.pro-serveinc.com.
c. Casoron 50W by Uniroyal Chemical Co., Inc.
d. Substitutions: See Section 01 60 00 - Product Requirements.

C. Geotextile Fabric: Non-biodegradable, non-woven, placed under base;.

2.02 SOURCE QUALITY CONTROL

A. See Section 01 40 00 - Quality Requirements for general requirements for testing and analysis of aggregate materials.
B. Where aggregate materials are specified using ASTM D2487 classification, testing of samples for compliance shall be provided before delivery to site.
C. If tests indicate materials do not meet specified requirements, change material and retest.
D. Provide materials of each type from same source throughout the Work.

PART 3 EXECUTION

3.01 EXAMINATION

A. Establishment of Grades
1. Set grade stakes per Section 01 70 00 - Execution and Closeout Requirements.
2. All work shall conform to the lines, elevations, and grades shown on the Drawings.
a. Use three consecutive points set on the same slope together so that any variation from a straight grade can be detected.
b. Report any such variation to the Architect. Contractor shall be responsible for any error in the grade of the finished work.
3. Grade or location stakes lost or disturbed, shall be reset by the Surveyor at no additional expense to District.
4. Areas having drainage gradients of 2 percent or more, provide elevation stakes, set with instrument, at grid intervals of 25 feet.
a. Intermediate stakes may be set by using a tightly-drawn string line over the tops of adjacent stakes.
b. Grade stakes must be set at all grade breaks, grade changes, etc.
5. Areas having drainage gradients of less than 2 percent; provide elevation stakes, set with instrument, at 10 foot intervals.
a. Grade stakes must be set at all grade breaks, grade changes, etc.

B. Verify that survey bench marks and intended elevations for the work are as indicated.
C. Verify substrate has been inspected, gradients and elevations are correct, and is dry.

3.02 PREPARATION

A. Stockpiling:
1. Clear and level storage sites prior to stockpiling of material.

2. Stockpile all materials, including approved material available from excavation and grading, in the manner and at the locations designated.
3. Aggregates shall be stockpiled on the cleared and leveled areas designated by the District Representative to prevent segregation.
4. Materials obtained from different sources shall be stockpiled separately.

B. Soil Sterilant:
1. Sterilize soil areas to receive paving.
2. Apply soil sterilant in accordance with manufacturer's instructions and applicable environmental regulations.
3. Take care to confine application to the areas to be paved. Sterilant shall not be applied within 2 feet of planting areas.

C. Correct irregularities in substrate gradient and elevation by scarifying, reshaping, and re-compacting.

D. Do not place aggregate on soft, muddy, or frozen surfaces.

3.03 INSTALLATION

A. Place and compact aggregate base material in accordance with SSPWC (Greenbook), Subsection 301-2. Place aggregate base below curbs and gutters and paving also, compacted to 95 percent at vehicular traffic and 90 percent at pedestrian-only traffic.

B. Application of Base Course:
1. After preparing the subgrade, Avoid all vehicular or machine traffic on the subgrade.
   a. Should it be necessary to haul over the prepared subgrade, drag and roll the traveled way as frequently as may be necessary to remove ruts, cuts, and breaks in the surface.
   b. Rake and hand tamp all cuts, ruts, and breaks in the surface of the subgrade that are not removed by the above operations.
   c. Equip with pneumatic tires all equipment used for transporting materials over the prepared subgrade.
2. Do not permit continued use of sections of prepared subgrade for hauling, so as to cut up or deform it from the true cross-section. Protect the prepared subgrade from all traffic.
3. Maintain the surface in its finished condition until the succeeding layer is placed.

C. Under Bituminous Concrete Paving:
1. Compact to 95 percent of maximum dry density and 90 percent at pedestrian-only traffic.
2. It is required that areas of exterior asphalt pavement be underlain by a layer of aggregate base material which meets the requirements, Thickness of base layer is as shown on the Drawings and varies per the Usage Type area.
   a. It is required that the upper 12 inches of soils below asphalt pavement base material be over-excavated and consist predominantly of satisfactory soil materials and/or approved imported fill.

b. It is required that the exposed bottom surface soils, below overexcavation, be scarified to the recommended depth of 8 inches, moisture conditioned to achieve optimum moisture content, but not higher than 2 percent above optimum, and then re-compacted to a minimum 90 percent relative compaction before any fill materials are placed.

3. The above subgrade preparation recommendations are based on the assumption that soils encountered during field exploration are representative of soils throughout the site.
   a. However, there can be unforeseen and unanticipated variations in soils between points of subsurface exploration. For this reason, the actual subgrade preparation will have to be determined on the basis of in-grading observations and testing performed by representatives of the project geotechnical consultant.
4. Provide grade stakes and elevations by a California Licensed Surveyor (LS) for the Geotechnical Engineer.
   a. Verify that the over-excavation depths, shown on the construction drawings for asphalt concrete pavement structural sections, have been achieved prior to re-compaction.
5. Correct irregularities by dressing down or filling as may be required, to bring areas to true subgrade elevations.
6. Where filling is required, scarify the subgrade to bond the new material to the in place material; use additional material as required at no additional cost. Subject to the approval of the Architect.
7. Remove excess material from the site to a legal disposal area.

D. Place aggregate in maximum 4 inch layers and roller compact to specified density.

E. Level and contour surfaces to elevations and gradients indicated.

F. Add small quantities of fine aggregate to coarse aggregate as appropriate to assist compaction.

G. Add water to assist compaction. If excess water is apparent, remove aggregate and aerate to reduce moisture content.

H. Use mechanical tamping equipment in areas inaccessible to compaction equipment.

I. Apply herbicide to finished surface.

3.04 TOLERANCES

A. Subgrade Tolerances:
   1. Subgrade for Pavement: Do not vary more than 0.02 ft..
   2. Subgrade for Subbase or Base Material: Do not vary more than 0.04 ft..
   3. Variations within the above specified tolerances shall be compensating so that the average grade and cross section specified are met.

B. Flatness: Maximum variation of 1/4 inch measured with 10 foot straight edge.

C. Scheduled Compacted Thickness: Within 1/4 inch.

D. Variation From Design Elevation: Within 1/2 inch.

3.05 FIELD QUALITY CONTROL

A. See Section 01 40 00 - Quality Requirements for general requirements for field inspection and testing.

B. Compaction density testing shall be performed on compacted aggregate base course in accordance with ASTM D1556 or ASTM D6938.

C. Results will be evaluated in relation to compaction curve determined by testing uncompacted material in accordance with AASHTO T 180, ASTM D698 ("standard Proctor"), or ASTM D1557 ("modified Proctor").

D. If tests indicate work does not meet specified requirements, remove work, replace and retest.

E. Proof roll compacted aggregate at surfaces that are under slabs-on-grade and paving.

3.06 CLEANING

A. Remove unused stockpiled materials, leave area in a clean and neat condition. Grade stockpile area to prevent standing surface water.

B. Leave borrow areas in a clean and neat condition. Grade to prevent standing surface water.

END OF SECTION

SECTION 32 12 16
ASPHALT PAVING

PART 1 GENERAL

1.01 SECTION INCLUDES

A. Aggregate base course.

B. Single course bituminous concrete paving.

C. Double course bituminous concrete paving.

D. Surface sealer.

E. This section compliments and shall be coordinated with Civil Drawing specifications / requirements. The most stringent requirements shall be utilized.

F. Asphaltic concrete paving for vehicular traffic and curbs, including necessary patching and repair of damaged new and existing paving.

1.02 RELATED REQUIREMENTS

A. Section 02 41 00 - Demolition: Selective demolition, site demolition, structure removal.

1.03 REFERENCE STANDARDS

A. ADA Standards - 2010 ADA Standards for Accessible Design.

B. AI MS-2 - Asphalt Mix Design Methods.

C. AI MS-19 - Basic Asphalt Emulsion Manual.

D. ASTM D946 - Standard Specification for Penetration-Graded Asphalt Cement for Use in Pavement Construction.

E. CBC - California Building Code.

F. CBC Ch. 11B - California Building Code-Chapter 11B.

G. SSPWC (Greenbook) - Standard Specifications for Public Works Construction.

1.04 SUBMITTALS

A. Materials List: List source and quality standard for all asphaltic concrete materials.

B. Mix Design:

1. Formulate a job-mix formula using the Hveem method in accordance with SSPWC (Greenbook) Section 203-6.2 and submit for approval.
2. Submit designs for asphaltic concrete prepared by a materials laboratory under direct supervision of a Civil Engineer licensed in the State of California or a standard mix design proven in actual performance.
3. Resultant Mixture: Hveem properties conforming to SSPWC (Greenbook) Section 203-6.4.4.

C. Certifications:

1. Weighmaster's Certificates or certified delivery tickets for each truckload of bituminous material delivered to site.
2. Certificates of Conformance: Asphalt, aggregate and sterilant materials.
   a. 20 days prior to the delivery of aggregates, asphalt materials, and paving mixes to the project site, submit certificates and test results of compliance of such materials with these specifications.
   b. Submit certificates of compliance from the supplier for bituminous materials for paint binder, asphaltic concrete, and seal coat.
   c. Submit weigh master's certificates or certified delivery tickets for each truck load of asphaltic material delivered to the project site.
   d. Upon completion of the weed control treatment, and as a condition for final acceptance, furnish a written certificate stating the brand name of the sterilant and the manufacturer, and that the sterilant used had at least the minimum required concentration, and that the rate and method of application complied in every respect with the conditions and standards contained herein.

D. Samples:
1. Prior to the delivery of specified aggregate to the site, submit samples of the material for the Inspector's acceptance in accordance with SSPWC (Greenbook) Section 4-1.4. Samples shall be typical of materials to be furnished from the proposed source and in conformance with the specified requirements.
2. Provide aggregate base gradation and quality certifications, dated within 30 days of submittal.

1.05 QUALITY ASSURANCE

A. Perform Work in accordance with locally adopted SSPWC (Greenbook).

B. Mixing Plant: Conform to Locally adopted SSPWC (Greenbook).
1. Asphaltic Concrete Producers Qualifications: Use only materials furnished by a bulk asphaltic concrete producer regularly engaged in production of hot mix, hot laid bituminous concrete.
2. Applicator Qualifications: Paving machine and roller operators shall be fully trained and experienced in the installation of asphaltic concrete paving on projects of similar size and complexity.

C. Testing and analysis of granular base material and asphaltic concrete paving mix shall be performed under provisions of Division 01.

D. Obtain materials from same source throughout.

1.06 FIELD CONDITIONS

A. Do not place asphalt when ambient air or base surface temperature is less than 40 degrees F, or surface is wet or frozen; or when rain is imminent.
1. Tack Coats: Minimum surface temperature of 60 deg F.
2. Asphalt Base Course: Minimum surface temperature of 40 deg F and rising at time of placement.
3. Asphalt Surface Course: Minimum surface temperature of 60 deg F at time of placement.

B. Place bitumen mixture when temperature is not more than 15 F degrees below bitumen supplier's bill of lading and not more than maximum specified temperature.

PART 2 PRODUCTS

2.01 REGULATORY REQUIREMENTS

A. Comply with applicable code for paving work on public property.

B. Where reference is made to SSPWC (Greenbook), the following shall apply.

1. For conditions not indicated otherwise on Contract Drawings, conform to Standard Details adopted by authorities having jurisdiction, including Standard Details for Public Works Construction, as amended and adopted by those authorities.
2. Perform on-site Work as indicated and referenced on Contract Drawings and as specified herein.

C. The quantity of volatile organic compounds (VOC) used in weed killer, seal coat, tack coat, primer, and other materials shall not exceed limits permitted under current regulations of local Air Quality Management District (AQMD).

D. Conform to California Code of Regulations (CCR), Volume 2, Part 2, Chapters 18A and 19A.

E. Conform to California Building Code (CBC), Chapter 11B and ADA Standards for accessibility requirements.

1. Paving shall be stable, firm, and slip resistant and shall comply with CBC Ch. 11B-302 and 11B-403.
2. Paving along accessible routes of travel shall be at least as slip-resistant as that described as a medium salted finish for slopes of less than 6%, and slip resistant at slopes of 6% or greater; CBC Ch. 11B-403.2.
3. Accessible routes of travel, walks, paving, and sidewalks, shall have a continuous common surface with minimum width of 48 inches per CBC Ch. 11B-403.5.1, not interrupted by steps or by abrupt changes in level.
   a. CBC Ch. 11B-303.2 Vertical: Changes in level exceeding 1/4 inch high maximum shall be permitted to be vertical and without edge treatment.
   b. CBC Ch. 11B-303.3 Beveled: Changes in level between 1/4 inch high minimum and 1/2 inch high maximum shall be beveled with a slope not steeper than 1:2.
4. Surface cross slopes shall not exceed 2 percent on any accessible path of travel.

2.02 MATERIALS

A. General: Aggregate base, prime coat paint binder, bituminous surface course and other materials shall be as noted on the Contract Drawings and shall comply with requirements of authorities having jurisdiction.

B. Asphalt Cement: ASTM D 946.

C. Asphalt Concrete Materials: SSPWC (Greenbook), Subsection 203-6.

D. Aggregate for Base Course: See Section 32 11 23 - Aggregate Base Course.

E. Aggregate for Binder Course : Angular crushed washed stone; free of shale, clay, friable material and debris.

1. Graded in accordance with ASTM D2487 Group Symbol GW.

F. Mineral Filler: Finely ground particles of limestone, hydrated lime or other mineral dust, free of foreign matter.

G. Fiber Reinforcement: Synthetic fibers shown to have long-term resistance to deterioration when in contact with alkalis and moisture; 1/2 inch length.

H. Geotextile Fabric: Non-biodegradable, non-wovenPetromat Enviro manufactured by Propex Operating Company, LLC.

1. Geotextile Construction: Needle-punched nonwoven geotextile composed of 100% polypropylene or polypropylene / recycled polyester blend, staple fiber and heat calendered on one side.

I. Crack Filler:

1. Cracks less than 1/2 inch in width: GuardTop Crackfiller or equal.
2. Cracks 1/2 inch or greater in width: #4 Sheet mix asphalt.

J. Primer: In accordance with locally adopted SSPWC (Greenbook).

K. Tack Coat: Homogeneous, medium curing, liquid asphalt.

L. Seal Coat: AI MS-19, slurry type.

1. Asphalt Emulsion, www.aema.org, SS1-h, per SSPWC (Greenbook) Section 203-9.
2. Acceptable Manufacturers:
   a. Blue Diamond Asphalt; Satin Seal: www.bluediamondasphalt.com.
   b. Diversified Asphalt Product; Over Kote: www.diversifiedasphalt.com.
   c. Gold Star Asphalt Products: goldstarsphalt.com
   d. SealMaster Pavement Products & Equipment; MasterSeal: sealmaster.net.
   e. Vulcan Materials Company; GuardTop: www.vulcanmaterials.com.
   f. Western Colloid Products; Park Top: www.westerncolloid.com.
   g. Substitutions: See Section 01 60 00 - Product Requirements.

2.03 ASPHALT PAVING MIXES AND MIX DESIGN

A. Asphalt Surfacing Materials: Provide asphalt surfacing meeting the following requirement, furnished from a commercial asphalt central mixing plant.

B. Use dry material to avoid foaming. Mix uniformly.

C. Base Course: 4.5 to 5.8 percent of asphalt cement by weight in mixture in accordance with SSPWC (Greenbook) Section 203-6.4.4, Type B.

D. Binder Course: 4.5 to 6 percent of asphalt cement by weight in mixture in accordance with AI MS-2.

1. CSS-1 h and conform to the requirements of SSPWC (Greenbook), Section 203-3 Emulsified Asphalt.

E. Playground Area Wearing Course: 4.8 to 6.5 percent of asphalt cement by weight in mixture in accordance with SSPWC (Greenbook) Section 203-6.4.4, Type D2.

1. Provide at least two courses of asphalt when Type D2 asphalt pavement is greater than 1-1/2 inches.

2. Surface Course Minimum Thickness: 1 inch and a maximum of 1-1/2 inches.

F. Submit proposed mix design of each class of mix for review prior to beginning of work.

2.04 SOURCE QUALITY CONTROL

A. Test mix design and samples in accordance with AI MS-2.

B. Submit asphaltic concrete mix design proposed by the Contractor to the Engineer for review.

C. Proposed mix to be tested for conformance with the specifications, including grading, asphalt content and stability.

2.05 ACCESSORIES

A. Headers and Stakes:

1. 2 x 6 inch nominal Redwood, Construction Heart Grade, or preservative treated Douglas Fir (PTDF), except at curves provide laminated 1 x 6 inch nominal PTD., unless indicated otherwise on Drawings

2. Stakes: 2 x 4 x 18 inch long Redwood, or 2 x 3 x 18 inch long PTDF; at 48 inch on center maximum.

3. Nails: Common, use hot dipped galvanized only, 12d minimum.

PART 3 EXECUTION

3.01 EXAMINATION

A. Verify that compacted subgrade and granular base is dry and ready to support paving and imposed loads.

B. Verify gradients and elevations of base are correct.

C. Fine grading, checking, shaping, and compacting of subgrade shall be complete before start of asphaltic concrete Work.

D. Soil Sterilant: Sterilize soil areas to receive asphaltic concrete paving. Apply soil sterilant in accordance with manufacturer's instructions and applicable environmental regulations. Take care to confine application to the areas to be paved.

E. Curbs and Gutters: Gutters shall be in place and cured prior to start of asphaltic concrete Work. Provide lumber ramping at all locations where rolling equipment or vehicles cross new concrete paving, curbs and gutters.

F. Headers: Place headers with tops flush with finish asphaltic concrete surfaces. Back headers with stakes.

1. Install headers along edge of bituminous surfacing abutting turf, earth, or planting area, unless indicated otherwise.

2. Install headers so the bottom surface has continuous bearing on solid grade. Where excavation for headers is undercut, thoroughly tamp soil under the header. Compact backfill on both sides of header to the density of adjacent undisturbed earth.

3. Fasten headers in place with redwood or Douglas fir stakes of length necessary to extend into solid grade a minimum of 12 inches. Stakes shall be of sound material, neatly pointed, driven vertically, and securely nailed to headers. Space stakes, not to exceed 4 feet on centers with top of stakes set one inch below top of header. Provide a minimum of 2-12d galvanized common nails through each stake.
4. Remove existing headers where new surfacing is installed adjacent to existing surfacing.
5. Install temporary headers at transverse joints of paving where continuous paving operations are not maintained.
6. Provide additional stakes and anchorage as required to fasten headers in place

G. Do not asphalt concrete on any surface, which contains ponded water or excessive moisture in the opinion of the Architect or consulting engineer.
1. If paving operations are in progress and rain or fog forces a shut down, loaded trucks in transit shall return to the plant, and no compensation will be allowed therefore.
2. Provide canvas tarpaulins to cover all loads of asphalt from the time that the mixture is loaded until it is discharged from the delivery vehicle, unless otherwise directed in writing.

3.02 EXCAVATING, BACKFILLING AND COMPACTING FOR REPAIR

A. Conform to requirements in Section 31 23 16.13 - Trenching, as required.

B. Where subgrade or base is deemed to be unstable or otherwise unsuitable, excavate such materials to firm earth, and replace with a required material. Install and compact fill materials in accordance with the requirements of related Specification sections.

3.03 AGGREGATE BASE COURSE

A. See Section 32 11 23.

B. Inspector will examine the base before the paving has begun. Correct any deficiencies before the paving is started.

C. Wherever asphaltic pavement does not terminate against a curb, gutter, or another pavement, provide and install a redwood or pressure treated Douglas fir header at the line of termination.

3.04 PREPARATION - PRIMER

A. Apply primer in accordance with manufacturer's instructions.

B. Apply primer on aggregate base or subbase at uniform rate of 0.25 gal/sq yd.

C. Apply primer to contact surfaces of curbs, gutters.

D. Use clean sand to blot excess primer.

3.05 PREPARATION - TACK COAT

A. Apply tack coat in accordance with SSPWC (Greenbook) Section 302-5.4.

B. Apply tack coat on asphalt or concrete surfaces over subgrade surface at uniform rate of 0.10 gal/sq yd.

C. Apply tack coat to contact surfaces of curbs, gutters and previously placed or existing paving.

D. Joining Pavement: Expose, cut and clean edges of existing pavement to straight, vertical surfaces for full depth of existing pavement.
   1. Paint edge with asphalt emulsion before placing new asphaltic concrete.
   2. Joints in New Paving: In accordance with SSPWC (Greenbook).

3.06 PLACING ASPHALT PAVEMENT - SINGLE COURSE

A. Install Work in accordance with SSPWC (Greenbook) Subsection 302-5.

B. Asphalt concrete of the class indicated in Part 2 shall be laid in courses conforming to SSPWC (Greenbook) Table 302-5.5(A), unless otherwise stated herein.

C. Place asphalt within 24 hours of applying primer or tack coat.

D. Place thickness as indicated on Civil Drawings to minimum 1 inch compacted thickness.
   1. Asphalt concrete work shall include full depth patching and variable thick asphalt concrete transition areas.
   2. Provide daily the Inspector, with copies of certificates of weight for all materials delivered to the job site and/or incorporated in the work.
   3. At no time shall the coarse aggregate that has segregated from the mix be scattered across the paved mat.

E. Install gutter drainage grilles and frames and manhole frames in correct position and elevation.

F. Compact pavement by rolling to specified density. Do not displace or extrude pavement from position.
   1. Compact (roll) asphaltic concrete in accordance with SSPWC (Greenbook), Subsection 302-5.6, using machine rollers.
      a. Compaction by vehicular traffic is prohibited.
      b. Compact areas inaccessible to rolling equipment with machine-powered tamper.

G. Perform rolling with consecutive passes to achieve even and smooth finish without roller marks.

3.07 PLACING ASPHALT PAVEMENT - DOUBLE COURSE

A. Provide at least two courses of asphalt when Type D2 asphalt pavement is greater then 1-1/2 inches. The surface course shall be a minimum thickness of 1 inch and a maximum of 1-1/2 inches.

B. Provide at least two courses of asphalt when Type C2 asphalt pavement is greater then 3 inches. The surface course shall be a minimum thickness of 1 inch and a maximum of 2 inches.

C. Install Work in accordance with SSPWC (Greenbook) Subsection 302-5.

D. Place asphalt binder course within 24 hours of applying primer or tack coat.

E. Place binder course to thickness as indicated on Civil Drawings, minimum 1 inch compacted thickness.

F. Place asphalt wearing course within two hours of placing and compacting binder course.

G. Place wearing course to thickness as indicated on Civil Drawings, minimum 1 inch compacted thickness.

H. Install gutter drainage grilles and frames and manhole frames in correct position and elevation.

I. Compact pavement by rolling to specified density. Do not displace or extrude pavement from position.

1. Compact (roll) asphaltic concrete in accordance with SSPWC (Greenbook), Subsection 302-5.6, using machine rollers.

a. Compaction by vehicular traffic is prohibited.

b. Compact areas inaccessible to rolling equipment with machine-powered tamper.

J. Perform rolling with consecutive passes to achieve even and smooth finish, without roller marks.

3.08 SEAL COAT

A. Apply seal coat after surface course application, in accordance with manufacturer's recommendations.

B. Apply seal coat to surface course and asphalt curbs in accordance with SSPWC (Greenbook) Subsection 302-8.2.

C. Add water to specified seal coat material. When air temperatures of 90 degrees F or more are encountered during application, consult manufacturer for recommendations.

D. If pavement surface exhibits imperfections of roller marks, rock pockets, ridges or depressions as determined by the Architectt, the addition of sand aggregate to seal coat, and amounts thereof, shall be as recommended by the manufacturer.

E. A second application shall be made after first coat has dried to the touch. When sand is added to the first seal coat, two additional coats without extra sand shall be applied.

F. Allow seal coat to dry before permitting traffic or striping.

3.09 PAVEMENT REPAIR AND PAVING

A. Preparation of existing pavement: Where indicated, remove loose asphaltic concrete, cleanout "pot holes" and cracks, remove dirt, oil and other foreign materials.

B. Repair holes with full paving section as specified. Repair "alligatoring" with asphalt "skin-patch". Fill all cracks larger than 1/4 inch wide with asphalt emulsion slurry.

C. Tack Coat: Apply asphalt oil AR-4000 or AR-8000, as required for jobsite condition, at metered application rate of no less than a range from 0.2 to 0.3 gallons per square yard of fabric or as directed by manufacturer and to provide 100 percent fabric saturation and ample bonding for paving section.

D. Fabric Reinforcement: Place fabric smooth side up in tack coat with 2 to 4 inch overlap. Hand-broom to remove wrinkles. Apply addition tack coat to joints and between overlapped fabric layers.

E. Overlay Asphalt: Place single course asphalt, 1-1/2 inch compacted thickness, in conformance with specified standards in this section.

3.10 TOLERANCES

A. Flatness: Maximum variation of 1/4 inch measured with 10 foot straight edge.

B. Compacted Thickness: Within 1/4 inch of specified or indicated thickness.

C. Variation from True Elevation: Within 1/2 inch.

3.11 FIELD QUALITY CONTROL

A. See Section 01 40 00 - Quality Requirements, for general requirements for quality control.

B. Provide field inspection and testing. Take samples and perform tests in accordance with AI MS-2.

1. Flood test entire area in presence of the Project Inspector.
2. Test entire area to verify it is free of standing water or puddles.

C. Pavement at all longitudinal joints shall have a Field Density of 95%, as described in SSPWC (Greenbook), Section 302-5.6.2.

1. When the test results of the field cores are less than 95% Relative Compaction, remove a 1 foot wide section on each side of the longitudinal joint.
2. Replace the removed pavement with an asphalt mix that meets the job specification at no additional cost to the District.

D. Test: Flood test all paving to demonstrate positive drainage.

1. Before acceptance, water test all pavements to ensure proper drainage as directed by the Inspector.
2. Flooding Method: By water tank truck.
3. Fill depressions where the water ponds to a depth of more than 1/8 inch; or the slope corrected to provide proper drainage.
4. The edges of the fill shall be feathered and smoothed so that the joint between the fill and the original surface is invisible.
5. No standing water shall remain 1-hour after test.

3.12 PROTECTION

A. Immediately after placement, protect pavement from mechanical injury for 2 days or until surface temperature is less than 140 degrees F.

1. After final rolling, prohibit all traffic on asphaltic concrete until mix has fully cooled and set. Minimum time, in all cases shall be 6 hours.

3.13 CLEANING

A. After completion of paving operations, clean all existing and new improvements that have been soiled, especially by oil tracking from asphalt tanks or placement in general.

B. For Substantial Completion review, broom clean and wash paving with hoses. Clean residue from landscaping installation.

END OF SECTION

SECTION 32 13 13
SITE CONCRETE

PART 1 GENERAL

1.01 SECTION INCLUDES

A. Concrete area paving, sidewalks, integral curbs, gutters, and general site applications.

1.02 RELATED REQUIREMENTS

A. Section 07 92 00 - Joint Sealants: Sealing joints.

B. Section 31 22 00 - Grading: Preparation of site for paving.

C. Section 32 11 23 - Aggregate Base Courses: Gravel base course.

1.03 REFERENCE STANDARDS

A. ACI 211.1 - Selecting Proportions for Normal-Density and High Density-Concrete - Guide.

B. ACI 301 - Specifications for Concrete Construction.

C. ACI 304R - Guide for Measuring, Mixing, Transporting, and Placing Concrete.

D. ACI 305R - Guide to Hot Weather Concreting.

E. ACI 306R - Guide to Cold Weather Concreting.

F. ACI 318 - Building Code Requirements for Structural Concrete.

G. ADA Standards - 2010 ADA Standards for Accessible Design.

H. ASTM A615/A615M - Standard Specification for Deformed and Plain Carbon-Steel Bars for Concrete Reinforcement.

I. ASTM C33/C33M - Standard Specification for Concrete Aggregates.

J. ASTM C39/C39M - Standard Test Method for Compressive Strength of Cylindrical Concrete Specimens.

K. ASTM C94/C94M - Standard Specification for Ready-Mixed Concrete.

L. ASTM C150/C150M - Standard Specification for Portland Cement.

M. ASTM C309 - Standard Specification for Liquid Membrane-Forming Compounds for Curing Concrete.

N. ASTM C494/C494M - Standard Specification for Chemical Admixtures for Concrete.

O. ASTM C1315 - Standard Specification for Liquid Membrane-Forming Compounds Having Special Properties for Curing and Sealing Concrete.

P. ASTM D1751 - Standard Specification for Preformed Expansion Joint Filler for Concrete Paving and Structural Construction (Nonextruding and Resilient Asphalt Types).

Q. ASTM D1752 - Standard Specification for Preformed Sponge Rubber, Cork, and Recycled PVC Expansion Joint Fillers for Concrete Paving and Structural Construction.

R. CBC - California Building Code.

S. CBC Ch. 11B - California Building Code-Chapter 11B.

T. SSPWC (Greenbook) - Standard Specifications for Public Works Construction.

1.04 SUBMITTALS

A. See Section 01 30 00 - Administrative Requirements, for submittal procedures.

B. Product Data: Provide data on joint filler, admixtures, and curing compound.

1.05 QUALITY ASSURANCE

A. Lines and Levels: Established by State of California licensed Surveyor or registered Civil Engineer. Costs of surveying services shall be included in the Contract Sum.

B. Installer Qualifications: Company specializing in performing work of the type specified and with minimum three years of documented experience.

PART 2 PRODUCTS

2.01 PAVING ASSEMBLIES

A. Comply with applicable requirements of ACI 301.

B. Concrete Sidewalks: 4,000 psi 28 day concrete, thickness as indicated on Drawings, minimum 4 inches, natural grey color Portland cement.

2.02 REGULATORY REQUIREMENTS

A. Conform to California Code of Regulations (CCR), Volume 2, Part 2, Chapters 18A and 19A.

B. Conform to California Building Code (CBC), Chapter 11B and ADA Standards for accessibility requirements.

1. Portland cement concrete paving shall be stable, firm, and slip resistant and shall comply with CBC Ch. 11B-302 and 11B-403.
2. Concrete paving and concrete finishes along accessible routes of travel shall be at least as slip-resistant as that described as a medium salted finish for slopes of less than 6%, and slip resistant at slopes of 6% or greater.
3. Accessible routes of travel, walks, paving, and sidewalks, shall have a continuous common surface with minimum width of 48 inches per CBC Ch. 11B-403.5.1, not interrupted by steps or by abrupt changes in level.
   a. CBC Ch. 11B-303.2 Vertical: Changes in level exceeding 1/4 inch high maximum shall be permitted to be vertical and without edge treatment.
   b. CBC Ch. 11B-303.3 Beveled: Changes in level between 1/4 inch high minimum and 1/2 inch high maximum shall be beveled with a slope not steeper than 1:2.
4. Surface cross slopes shall not exceed 2 percent on any accessible path of travel.

C. Albedo Reflectance of Finish Concrete: 0.30, minimum.

2.03 FORM MATERIALS

A. Wood form material, profiled to suit conditions.

B. Joint Filler: Preformed; non-extruding bituminous type (ASTM D1751) or sponge rubber or cork (ASTM D1752).

1. Thickness: 1/2 inch.

2.04 REINFORCEMENT

A. Reinforcing Steel: ASTM A615/A615M, Grade 60 (60,000 psi) yield strength; deformed billet steel bars; unfinished.

B. Dowels: ASTM A615/A615M, Grade 60 - 60,000 psi yield strength; deformed billet steel bars; unfinished finish.

C. Provide supports for reinforcement to position the bars at mid depth of the concrete. Plastic and/or steel chairs, and dobies are acceptable.

2.05 CONCRETE MATERIALS

A. Obtain cementitious materials from same source throughout.

B. Cement: ASTM C150/C150M, Sulfate Resistant - Type V Portland cement, gray color.

C. Fine and Coarse Mix Aggregates: ASTM C33/C33M.

D. Water: Clean, and not detrimental to concrete.

E. Chemical Admixtures: ASTM C494/C494M, Type A - Water Reducing, Type C - Accelerating, and Type G - Water Reducing, High Range and Retarding.

1. Do not use chemicals that will result in soluble chloride ions in excess of 0.1 percent by weight of cement.

2.06 ACCESSORIES

A. Curing Compound: ASTM C309, Type 1-D, Class A.

1. Comply with all applicable air pollution requirements.

B. Liquid Surface Sealer: <>

1. Pentrating High solids, acrylic curing and sealing compound: Minimum 25% non-yellowing, acrylic solids curing compound; shall conform to ASTM C309 and/or ASTM C1315, Type I, Class A, VOC compliant.

a. Products:

1) Laticrete International, Inc.; L&M Aquapel Plus: www.lmcc.com.

2) L.M. Scofield Company (Sika Brand); Cureseal-W: www.scofield.com.

3) W. R. Meadows Company; Intraguard: www.wrmeadows.com.

4) Substitutions: See Section 01 6000 - Product Requirements.

C. Slab Isolation Joint Filler: 1/2 inch thick, height equal to slab thickness, with removable top section that will form 1/2 inch deep sealant pocket after removal.

1. Material: Closed-cell, non-absorbent, compressible polymer foam in sheet form.

2.07 CONCRETE MIX DESIGN

A. Proportioning Normal Weight Concrete: Comply with ACI 211.1 recommendations.

B. Concrete Strength: Establish required average strength for each type of concrete on the basis of field experience or trial mixtures, as specified in ACI 301.

1. For trial mixtures method, employ independent testing agency acceptable to Architect for preparing and reporting proposed mix designs.

C. Admixtures: Add acceptable admixtures as recommended in ACI 211.1 and at rates recommended by manufacturer.

D. Concrete Properties:

1. Compressive strength, when tested in accordance with ASTM C39/C39M at 28 days; As scheduled.
2. Water-Cement Ratio: Maximum 40 percent by weight, or according to indicated concrete strength..
3. Maximum Slump: 4 inches.

2.08 MIXING

A. Transit Mixers: Comply with ASTM C94/C94M.

PART 3 EXECUTION

3.01 EXAMINATION

A. Verify compacted subgrade is acceptable and ready to support paving and imposed loads.

B. Verify gradients and elevations of base are correct.

3.02 SUBBASE

A. See Section 32 11 23 for construction of base course for work of this Section, where indicated on Drawings.

3.03 PREPARATION

A. Project Conditions:

1. Water and Dust Control: Maintain control of concrete dust and water at all times. Do not allow adjacent planting areas to be contaminated.

B. Moisten base to minimize absorption of water from fresh concrete.

C. Notify Architect minimum 24 hours prior to commencement of concreting operations.

3.04 COORDINATION WITH EXISTING CONSTRUCTION

A. Connection to Existing Construction: Where new concrete is doweled to existing construction, drill holes in existing concrete, insert steel dowels and pack with non-shrinking grout.

B. Preparation of Existing Concrete: Prepare previously placed concrete by cleaning with steel brush and apply bonding agent in accordance with manufacturer's instructions.

3.05 FORMING

A. Place and secure forms to correct location, dimension, profile, and gradient.

B. Assemble formwork to permit easy stripping and dismantling without damaging concrete.

C. Place joint filler vertical in position, in straight lines. Secure to formwork during concrete placement.

3.06 REINFORCEMENT

A. Place reinforcement at midheight of slabs-on-grade.

1. Locate reinforcement to provide required cover by concrete. If not otherwise indicated on Drawings, provide concrete cover in compliance with ACI 318.
2. Reinforcement Spacing: Space reinforcement as indicated on Drawings or in Standard Specifications, whichever is more stringent. If not indicated, maintain clear spacing of two times bar diameter but not less than 1-1/2 inch nor less than 1-1/3 times maximum size aggregate.
3. Reinforcement Supports: Provide load bearing pads under supports or provide precast concrete block bar supports.

B. Interrupt reinforcement at contraction and expansion joints.

C. Place dowels to achieve pavement and curb alignment as detailed.

1. Secure tie dowels in place before depositing concrete.
2. Provide No. 3 bars, 18 inch long at 24 inches O.C. for securing dowels where no other reinforcement is provided.

3.07 COLD AND HOT WEATHER CONCRETING

A. Follow recommendations of ACI 305R when concreting during hot weather.

B. Follow recommendations of ACI 306R when concreting during cold weather.

C. Do not place concrete when base surface temperature is less than 40 degrees F, or surface is wet or frozen.

3.08 PLACING CONCRETE

A. Place concrete in accordance with ACI 304R.

1. Mixing: If batch plant is within travel time not exceeding maximum limits, transit mix concrete in accordance with ASTM C94/C94M. If travel time exceeds limits, provide alternative means for mixing and submit for review and approval.

B. Do not place concrete when base surface is wet.

C. Ensure reinforcement, inserts, embedded parts, formed joints are not disturbed during concrete placement.

D. Place concrete continuously over the full width of the panel and between predetermined construction joints. Do not break or interrupt successive pours such that cold joints occur.

E. Place concrete to pattern indicated.

3.09 JOINTS

A. Align curb, gutter, and sidewalk joints.

B. Place 1/2 inch wide expansion joints at 20 foot intervals and to separate paving from vertical surfaces and other components and in pattern indicated.

1. Form joints with joint filler extending from bottom of pavement to within 1/2 inch of finished surface.
2. Secure to resist movement by wet concrete.
3. If expansion joints are not indicated, conform to SSPWC (Greenbook) and standard details and specifications of authorities having jurisdiction.

C. Provide scored joints.

1. Tooled Joints: 1-inch deep by 3/16-inch wide tooled joints with 1/8-inch radius corners.
2. At 5 feet intervals for pedestrian paving.
3. At 10 feet intervals for vehicle paving.
4. Between sidewalks and curbs.
5. Between curbs and pavement.

D. Provide keyed joints as indicated.

E. Saw cut contraction joints 3/16 inch wide at an optimum time after finishing. Cut 1/3 into depth of slab.

3.10 FINISHING

A. Area Paving: Light broom, texture perpendicular to pavement direction.

B. Curbs and Gutters: Light broom, texture parallel to pavement direction.

C. Place curing compound on exposed concrete surfaces immediately after finishing. Apply in accordance with manufacturer's instructions.

3.11 TOLERANCES

A. ACI 301, Class B, except paving in public rights-of-way shall conform to SSPWC (Greenbook).

B. Maximum Variation of Surface Flatness: 1/4 inch in 10 ft.

C. Maximum Variation From True Position: 1/4 inch.

D. Control-joint grooves and other conspicuous lines:

1. 1/4 inch maximum in any 20 feet.
2. 1/2 inch maximum in any 40 feet.

E. Variation in Cross-Sectional Thickness of Slabs:

1. Minus 1/4 inch.
2. Plus 1/2 inch.

F. Variation in Radii

1. In radii of less than 10 feet:
   a. 1/8 inch in any 5 feet.
   b. 1/4 inch in any 1 0 feet.
2. In radii of 20 feet:
   a. 1/4 inch in any 10 feet.
   b. 3/8 inch in any 20 feet
3. In radii of 30 feet or more:
   a. 1/2 inch in any 20 feet.
   b. 1 inch in any 30 feet.

G. Coefficient of Friction for Finish Surface:

1. Pedestrian Vehicular Finish Surface: Minimum 0.6 static coefficient of friction is required for all concrete paving finish surface. All concrete paving surfaces to be broom finish.

2. Ramps: Minimum 0.8 static coefficient of friction is required for all concrete paving finish surfaces on ramps. All concrete paving surfaces on ramps to be broom finish.

3.12 FIELD QUALITY CONTROL

A. An independent testing agency will perform field quality control tests, as specified in Section 01 40 00 - Quality Requirements.

1. Provide free access to concrete operations at project site and cooperate with appointed firm.
2. Submit proposed mix design of each class of concrete to inspection and testing firm for review prior to commencement of concrete operations.
3. Tests of concrete and concrete materials may be performed at any time to ensure compliance with specified requirements.

B. Compressive Strength Tests: ASTM C39/C39M; for each test, mold and cure three concrete test cylinders. Obtain test samples for every 75 cu yd or less of each class of concrete placed.

1. Take one additional test cylinder during cold weather concreting, cured on job site under same conditions as concrete it represents.
2. Perform one slump test for each set of test cylinders taken.

C. Maintain records of placed concrete items. Record date, location of pour, quantity, air temperature, and test samples taken.

3.13 PROTECTION

A. Immediately after placement, protect pavement from premature drying, excessive hot or cold temperatures, and mechanical injury.

1. Provide lumber ramping and plywood covering where curbs and gutters are subject to vehicular and equipment traffic during construction.

END OF SECTION

SECTION 32 31 13
CHAIN LINK FENCES AND GATES

PART 1 GENERAL

1.01 SECTION INCLUDES

A. Posts, rails, and frames.

B. Wire fabric.

C. Concrete.

D. Manual gates with related hardware.

E. Accessories.

1.02 REFERENCE STANDARDS

A. ADA Standards - 2010 ADA Standards for Accessible Design.

B. ASTM A153/A153M - Standard Specification for Zinc Coating (Hot-Dip) on Iron and Steel Hardware.

C. ASTM F1043 - Standard Specification for Strength and Protective Coatings on Steel Industrial Fence Framework.

D. ASTM F1083 - Standard Specification for Pipe, Steel, Hot-Dipped Zinc-Coated (Galvanized) Welded, for Fence Structures.

E. CLFMI CLF-FIG0111 - Field Inspection Guide.

F. CLFMI CLF-PM0610 - Product Manual.

G. CLFMI CLF-SFR0111 - Security Fencing Recommendations.

H. CLFMI WLG 2445 - Wind Load Guide for the Selection of Line Post and Line Post Spacing.

I. FS RR-F-191/1D - Fencing, Wire and Post Metal (Chain-Link Fence Fabric).

J. SSPC-Paint 20 - Zinc-Rich Primers (Type I, "Inorganic," and Type II, "Organic").

1.03 SUBMITTALS

A. See Section 01 30 00 - Administrative Requirements, for submittal procedures.

B. Product Data: Provide data on fabric, posts, accessories, fittings and hardware.

C. Design Calculations: For high wind load areas, provide calculations for fence fabric and accessory selection as well as line post spacing and foundation details. See CLFMI WLG 2445 for line post and spacing guidance.

D. Shop Drawings: Indicate plan layout, spacing of components, post foundation dimensions, hardware anchorage, and schedule of components. See CLFMI CLF-SFR0111 for planning and design recommendations.

E. Manufacturer's Qualification Statement.

F. Fence Installer Qualification Statement.

G. Project Record Documents: Accurately record actual locations of property perimeter posts relative to property lines and easements.

H. Field Inspection Records: Provide installation inspection records that include post settings, framework, fabric, barbed wire, fittings and accessories, gates, and workmanship.

1.04 QUALITY ASSURANCE

A. Manufacturer Qualifications: Company specializing in manufacturing products specified in this section, with not less than three years of documented experience.

B. Fence Installer: Company with demonstrated successful experience installing similar projects and products, with not less than five years of documented experience.

1.05 WARRANTY

A. See Section 01 78 00 - Closeout Submittals, for additional warranty requirements.

B. Correct defective Work within a five year period after Date of Substantial Completion.

C. Provide five year manufacturer warranty for rusting or breakdown of finish.

PART 2 PRODUCTS

2.01 REGULATORY REQUIREMENTS

A. Provide fences and gates meeting life safety and accessibility requirements of California Building Code (CBC) Title 24, Part 2, Chapters 10 and 11B; and ADA Standards, per latest amendments.

1. Gates on the Accessible Route: Meet all the requirements of an accessible door in compliance with CBC Section 11B-404 and 11B-206.5.
2. Gate Clear Opening Width: 32 inches minimum. CBC Section 11B-404.2.3
   a. Projections: None below 34 inches and 4 inches maximum projections into it between 34 inches and 80 inches above the finish floor or ground.
3. Gate Hardware: Meet the requirements of CBC 11B-206.5 and 11B-404.2.7.
   a. Latch: Latch, including padlock eye as integral part of latch, mounted 40 inches above finish grade. Comply with California Fire Code.
   b. Hardware shall comply with local Fire Authority, California Building Code (CBC) Title 24, Section 1010.1.9.1, and California Fire Code (CFC) Section 503.5.2.
   c. The lever of lever actuated latches or locks for an accessible gate shall be curved with a return to within 1/2 inch of the (face of) gate to prevent catching on the clothing or persons. California Referenced Standards Code T-24 Part 12, Section 12-10-202, Item (F).
   d. Hand activated opening hardware, handles, pulls, latches, locks, and other operating devices for and accessible gate shall have a shape that is easy to grasp with one hand and does not require tight grasping, tight pinching, or twisting of the wrist to operate. CBC Section 11B-404.2.7 and 11B-309.4.
4. Swing doors and gate surfaces within 10 inches of the finish floor or ground shall have a smooth surface on the push side extending the full width of the door or gate. Parts creating horizontal or vertical joints in these surfaces shall be within 1/16 inch of the same plane as the other and be free of sharp or abrasive edges. Cavities created by added kick plates shall be capped. CBC Section 11B·404.2.10

5. Maximum effort to operate a gate to not exceed 5 lbf. CBC Section 11B-404.2.9.
6. Bottom of Gate: Maximum 3 inches from finish surface of the path of travel.

B. Exit Devices: Comply with State Fire Marshal Standard 12-10-3 Exits, Section 12-10-302.
1. Cross-bar: Extend across not less than one-half the width of the door/gate.
2. Ends of Cross-Bar: Curve, guard or otherwise designed to prevent catching on the clothing of persons during egress.

2.02 MANUFACTURERS

A. Chain Link Fences and Gates:
1. Ameristar Perimeter Security, USA : www.ameristarfence.com/#sle
2. Master-Halco, Inc: www.masterhalco.com/#sle.
3. Merchants Metals: www.merchantsmetals.com/#sle.
4. Substitutions: See Section 01 60 00 - Product Requirements.

2.03 COMPONENTS

A. Fabric: 2 inch diamond mesh interwoven wire, 9 gauge, 0.1483 inch thick, top selvage knuckle end closed, bottom selvage knuckle end closed.

B. Tension Wire: 6 gauge, 0.1920 inch thick steel, single strand.

C. Tie Wire: Aluminum alloy steel wire.

2.04 MATERIALS

A. Posts, Rails, and Frames:
1. Sizes to be determined by fencing manufacturer for wind load of fencing with "tennis court" windscreen and design wind speed of 105 mph. Comply with CLFMI WLG 2445. The following sizes and those listed on the Drawings are minimum.
2. ASTM A1011/A1011M, Designation SS; hot-rolled steel strip, cold formed to pipe configuration, longitudinally welded construction, minimum yield strength of 50 ksi; zinc coating complying with ASTM F1043 and ASTM F1083.
3. Line Posts: Type I round in accordance with FS RR-F-191/1D.
4. Terminal, Corner, Rail, Brace, and Gate Posts: Type I round in accordance with FS RR-F-191/1D.
5. Comply with CLFMI CLF-PM0610.

B. Wire Fabric:
1. ASTM F668 polymer-coated steel chain link fabric.
2. Comply with CLFMI CLF-PM0610.

C. Concrete:
1. Ready-mixed, complying with ASTM C94/C94M; normal Portland cement; 2,500 psi strength at 28 days, 3 inch slump; 3/4 inch nominal size aggregate.

2.05 GATES

A. Gates that are part of the accessible route shall meet all the requirements of an accessible door in compliance with CBC 11B-404.

B. Sizes: As indicated on the Drawings, minimum width not be less than 36 inches (clear opening width to be not less than 32 inches).

C. Fabrication:

1. Frames: Continuosly welded miter cut joint corners.
   a. Grind welds flush and smotth.
   b. Hot dip galvanized after fabrication.
   c. Field welds: : SSPC-Paint 20 Type I - Inorganic, complying with VOC limitations of authorities having jurisdiction.
2. Fabric: Install fence fabric to side member with full height tension bars and and bands, spaced at maximum 14 inches on center.
   a. Attach to horizontal members with wire ties at maximum 12 inches on center.
3. Latches: Weld latches and strikes to posts and frames.
   a. Hot dip galvanized after fabrication.
4. Hinges: Burr or center punch threads of of gate hinge bolts to avoid removal of nuts.
5. Clearances:
   a. Bottom: 1-1/2 inches.
   b. Top: 1 inch.
6. Gates in Sloping Areas: Conform to grade.
7. Provide an opening in each gate for for access to locking device or padlock. Knuckle fabric ends surrounding the opening.
8. Sliding and Swing Barricade Gates:
   a. Wheel Housing: Provide unit to fit tightly to roll track and prevent gate from rolling over objects.
   b. Unsupported cantilever roll gates are not acceptable.
   c. Provide both top and track gate stops as indicated on Drawings.

2.06 MANUAL GATES AND RELATED HARDWARE

A. Hardware for Single Swinging Gates: 180 degree hinges, 2 for gates up to 60 inches high, 3 for taller gates; fork latch with gravity drop and padlock hasp; keeper to hold gate in fully open position.

B. Hardware for Double Swinging Gates: 180 degree hinges, 2 for gates up to 60 inches high, 3 for taller gates; drop bolt on inactive leaf engaging socket stop set in concrete, active leaf latched to inactive leaf preventing raising of drop bolt, padlock hasp; keepers to hold gate in fully open position.

1. Provide 3 hinges for gates over 16 feet wide.

C. Hinges: Finished to match fence components.

1. Structurally capable of supporting gate leaf and allow opening and closing without binding.
2. Non-lift-off type hinge design to permit gate to swing 180 degrees.
3. Provided by District.

D. Latches: Finished to match fence components.

1. Fork type latch capable of retaining gate in closed position, except gates with panic hardware.
2. Provided by District.

E. Locking: Provide padlock capability on non-pedestrian gates only. Do not install padlock capability on Exit Gates, gates on Path of Travel with Exit Devices and other pedestrian gates.

2.07 ACCESSORIES

A. Caps: Cast steel galvanized; sized to post diameter, set screw retainer.

B. Fittings: Sleeves, bands, clips, rail ends, tension bars, fasteners and fittings; steel.

2.08 FINISHES

A. Components and Fabric: Vinyl coated over coating of 1.8 ounces per square foot galvanizing.

B. Hardware: Hot-dip galvanized to weight required by ASTM A153/A153M.

C. Accessories: Same finish as framing.

D. Color(s): To be selected by Architect from manufacturer's standard range.

PART 3 EXECUTION

3.01 EXAMINATION

A. Verification of Conditions: Verify that areas are clear of obstructions or debris.

3.02 INSTALLATION

A. Install framework, fabric, accessories and gates in accordance with ASTM F567.

1. Space line posts at intervals not exceeding 10 feet.

B. Place fabric on outside of posts and rails.

C. Set intermediate, terminal, and gate posts plumb , in concrete footings with top of footing 2 inches above finish grade. Slope top of concrete for water runoff.

D. Line Post Footing Depth Below Finish Grade: ASTM F567.

E. Corner, Gate and Terminal Post Footing Depth Below Finish Grade: ASTM F567.

F. Brace each gate and corner post to adjacent line post with horizontal center brace rail and diagonal truss rods. Install brace rail one bay from end and gate posts.

G. Install center brace rail between posts with fittings and accessories for fence height 8 feet and higher, inclusive.

H. Provide top rail through line post tops and splice with 6 inch long rail sleeves.

I. Install center and bottom brace rail on gate leaves, welded construction.

J. Do not stretch fabric until concrete foundation has cured 28 days.

K. Stretch fabric between terminal posts or at intervals of 100 feet maximum, whichever is less.

L. Position bottom of fabric 2 inches above finished grade.

M. Fasten fabric to top rail, line posts, braces, and bottom tension wire with one complete wrap tie wire at maximum 15 inches on centers.

N. Attach fabric to end, corner, and gate posts with tension bars and tension bar clips.

O. Install bottom tension wire stretched taut between terminal posts.

P. Do not attach the hinged side of gate to building wall; provide gate posts.

Q. Install hardware and gate with fabric to match fence.

R. Provide a transom rail and fabric at top of pedestrian gate openings.

1. Provide transom rail at minimum 80 inches above high point of grade at gate opening.
2. Pin or or rivet transom rail to rail end fittings with 1/4 inch mild steel rivets through rail and peen. Welding on rail ends is not permitted.

S. Provide concrete center drop to footing depth and drop rod retainers for the inactive leaf at center of double gate openings.

1. Exceptions: Gates with panic devices.

T. Peen all bolts upon installation.

3.03 FENCE ADJUSTMENTS

A. Where finish grade is is raised 6 inches or less, cut and re-knuckle existing fence fabric. Adjust tension wire and and tie to fabric. Bottom of fabric to be 3/4 inch above grade.

B. where finish pavement is lowered 6 inches or less, remove post footing to flush with finish grade; adjust fabric and attachments. Bottom of fabric to be 3/4 inch above grade.

C. Entirely replace post footings and fabrics that require adjustment after installation.

3.04 TOLERANCES

A. Maximum Variation From Plumb: 1/4 inch.

B. Maximum Offset From True Position: 1 inch.

C. Do not infringe on adjacent property lines.

3.05 FIELD QUALITY CONTROL

A. See Section 01 40 00 - Quality Requirements, for additional requirements.

B. Layout: Verify that fence installation markings are accurate to design, paying attention to gate locations, underground utilities, and property lines.

C. Post Settings: Randomly inspect three locations against design for:

1. Hole diameter.
2. Hole depth.
3. Hole spacing.

D. Fence Height: Randomly measure fence height at three locations or at areas that appear out of compliance with design.

E. Gates: Inspect for level, plumb, and alignment.

F. Workmanship: Verify neat installation free of defects. See CLFMI CLF-FIG0111 for field inspection guidance.

1. Install fence fabric free from barbs or other projections. installed fence fabric with such defects will be considered defective.

3.06 CLEANING

A. Clean jobsite of excess materials; scatter excess material from post hole excavations uniformly away from posts. Remove excess material if required.

B. Clean fence with mild household detergent and clean water rinse well.

END OF SECTION

SECTION 33 01 10.58
DISINFECTION OF WATER PIPING SYSTEMS

PART 1 GENERAL

1.01 SECTION INCLUDES

A. Disinfection of site domestic water lines and site fire water lines specified in Section 33 14 16.

B. Disinfection of building domestic water piping specified in Division 22.

C. Testing and reporting results.

1.02 RELATED REQUIREMENTS

A. Division 22 - Plumbing; Plumbing Piping: Disinfection of building domestic water piping system.

B. Section 33 14 16 - Site Water Distribution Piping.

1.03 REFERENCE STANDARDS

A. AWWA B300 - Hypochlorites.

B. AWWA B301 - Liquid Chlorine.

C. AWWA B302 - Ammonium Sulfate.

D. AWWA B303 - Sodium Chlorite.

E. AWWA C651 - Disinfecting Water Mains.

1.04 SUBMITTALS

A. See Section 01 30 00 - Administrative Requirements, for submittal procedures.

B. Test Reports: Indicate results comparative to specified requirements.

C. Certificate: From authority having jurisdiction indicating approval of water system.

D. Certificate: Certify that cleanliness of water distribution system meets or exceeds specified requirements.

E. Disinfection report:

1. Type and form of disinfectant used.
2. Date and time of disinfectant injection start and time of completion.
3. Test locations.
4. Initial and 24 hour disinfectant residuals (quantity in treated water) in ppm for each outlet tested.
5. Date and time of flushing start and completion.
6. Disinfectant residual after flushing in ppm for each outlet tested.

F. Bacteriological report:

1. Date issued, project name, and testing laboratory name, address, and telephone number.

2. Time and date of water sample collection.
3. Name of person collecting samples.
4. Test locations.
5. Initial and 24 hour disinfectant residuals in ppm for each outlet tested.
6. Coliform bacteria test results for each outlet tested.
7. Certification that water complies, or fails to comply, with bacterial standards of local water authority.

1.05 QUALITY ASSURANCE

A. Water Treatment Firm: Company specializing in disinfecting potable water systems specified in this Section with minimum three years documented experience.

B. Testing Firm: Company specializing in testing potable water systems, certified by governing authorities of California.

C. Submit bacteriologist's signature and authority associated with testing.

PART 2 PRODUCTS

2.01 DISINFECTION CHEMICALS

A. Chemicals: AWWA B300 Hypochlorite, AWWA B301 Liquid Chlorine, AWWA B302 Ammonium Sulfate, and AWWA B303 Sodium Chlorite.

PART 3 EXECUTION

3.01 EXAMINATION

A. Verify that piping system and water well has been cleaned, inspected , and pressure tested.

B. Schedule disinfecting activity to coordinate with start-up, testing, adjusting and balancing, demonstration procedures, including related systems.

3.02 DISINFECTION

A. Use method prescribed by the applicable state or local codes, or health authority or water purveyor having jurisdiction, or in the absence of any of these follow AWWA C651.

B. Provide and attach equipment required to perform the work.

C. Inject treatment disinfectant into piping system.

D. Maintain disinfectant in system for 24 hours.

E. Flush, circulate, and clean until required cleanliness is achieved; use municipal domestic water.

F. Replace permanent system devices removed for disinfection.

G. Pressure test system to 120 psi. Repair leaks and re-test.

3.03 FIELD QUALITY CONTROL

A. Perform field inspection and testing in accordance with Section 01 40 00.

B. Test samples in accordance with AWWA C651.

END OF SECTION

SECTION 33 14 16
SITE WATER DISTRIBUTION PIPING

PART 1 GENERAL

1.01 SECTION INCLUDES

A. Water pipe for site conveyance lines.

B. Pipe valves.

1.02 RELATED REQUIREMENTS

A. Section 33 01 10.58 - Disinfection of Water Piping Systems: Disinfection of site service utility water piping.

1.03 REFERENCE STANDARDS

A. ASTM C94/C94M - Standard Specification for Ready-Mixed Concrete.

B. ASTM D1785 - Standard Specification for Poly(Vinyl Chloride) (PVC) Plastic Pipe, Schedules 40, 80, and 120.

C. ASTM D2466 - Standard Specification for Poly(Vinyl Chloride) (PVC) Plastic Pipe Fittings, Schedule 40.

D. ASTM D2855 - Standard Practice for the Two-Step (Primer & Solvent Cement) Method of Joining Poly (Vinyl Chloride) (PVC) or Chlorinated Poly (Vinyl Chloride) (CPVC) Pipe and Piping Components with Tapered Sockets.

E. AWWA C105/A21.5 - Polyethylene Encasement for Ductile-Iron Pipe Systems.

F. AWWA C600 - Installation of Ductile-Iron Water Mains and Their Appurtenances.

G. AWWA C606 - Grooved and Shouldered Joints.

H. NACE SP0169 - Control of External Corrosion on Underground or Submerged Metallic Piping Systems.

1.04 ADMINISTRATIVE REQUIREMENTS

A. Preinstallation Meeting: Conduct a preinstallation meeting one week prior to the start of the work of this section; require attendance by all affected installers.

B. Sequencing: Ensure that utility connections are achieved in an orderly and expeditious manner.

1. Site water lines are to go up to approximately 5 feet from the building perimeter. See individual building systems for continuation.

1.05 SUBMITTALS

A. See Section 01 30 00 - Administrative Requirements, for submittal procedures.

B. Product Data: Provide data on pipe materials, pipe fittings, valves and accessories.

C. Manufacturer's Certificate: Certify that products meet or exceed specified requirements.

D. Project Record Documents: Record actual locations of piping mains, valves, connections, thrust restraints, and invert elevations. Identify and describe unexpected variations to subsoil conditions or discovery of uncharted utilities.
   1. On a set of Contractor Drawings, kept at the site during construction, mark construction that is installed differently from that indicated.
      a. Locate materials installed underground by dimensions from fixed identifiable points whether installed as indicated or not.

1.06 QUALITY ASSURANCE

A. Perform Work in accordance with utility company requirements.
B. Manufacturer's Qualification: Firms regularly engaged in manufacture of potable water system materials and products, of types and sizes required, whose products have been in satisfactory use in similar service for not less than 5 years.
C. Installer's Qualifications: Firm with at least 3 years of successful installation experience on projects with potable water piping work similar to that required for project.

1.07 DELIVERY, STORAGE, AND HANDLING

A. Deliver and store valves in shipping containers with labeling in place.

1.08 WARRANTY

A. See Section 01 78 00 - Closeout Submittals, for additional warranty requirements.
B. Correct defective Work within a five year period after Date of Substantial Completion.

PART 2 PRODUCTS

2.01 WATER PIPE

A. General:
   1. Provide piping materials and factory-fabricated piping products of size, type, pressure ratings, and capacities as indicated on Drawings.
   2. Provide size and types matching piping and equipment connections; provide fittings of materials which match pipe materials used in potable water systems.
B. Piping:
   1. Provide pipe fittings and accessories of same material and weight/class as pipes, with joining method as indicated on Drawings.
C. PVC Pipe: ASTM D1785 Schedule 80, for sizes 1/2 inch through 3 inches.
   1. Fittings: ASTM D2466, PVC.
   2. Joints: ASTM D2855, solvent weld.

2.02 VALVES

A. Valves: Manufacturer's name and pressure rating marked on valve body.
B. Gate Valves Up To 3 Inches:
   1. Brass or Bronze body, non-rising stem, inside screw, single wedge or disc, compression ends, with control rod, post indicator, valve key, and extension box.

C. Ball Valves Up To 2 Inches:

1. Brass body, Teflon coated brass ball, rubber seats and stem seals, Tee stem pre-drilled for control rod, AWWA inlet end, compression outlet with electrical ground connector, with control rod, valve key, and extension box.

2.03 ACCESSORIES

A. Concrete: Ready-mixed, complying with ASTM C94/C94M; Type V - Sulfate Resistant Portland cement; 3,000 psi strength at 28 days, 3 inch slump; 3/4 inch nominal size aggregate.

B. Identification:

1. Underground-Type Plastic Line Marker: Manufacturer's standard permanent, bright-colored, continuous-printed plastic tape, intended for direct-burial service; not less than 6 inches wide x 4 mils thick. Provide blue tape with black printing reading "CAUTION WATER LINE BURIED BELOW".

2. Nonmetallic Piping Label: If nonmetallic piping is used for water service, provide engraved plastic laminate, label permanently affixed to main electrical meter panel stating "THIS STRUCTURE HAS A NONMETALLIC WATER SERVICE".

PART 3 EXECUTION

3.01 EXAMINATION

A. Verify that building service connection and municipal utility water main size, location, and invert are as indicated.

3.02 PREPARATION

A. Cut pipe ends square, ream pipe and tube ends to full pipe diameter, remove burrs.

B. Remove scale and dirt on inside and outside before assembly.

C. Prepare pipe connections to equipment with flanges or unions.

3.03 TRENCHING

A. See the sections on excavation and fill for additional requirements.

B. Hand trim excavation for accurate placement of pipe to elevations indicated.

C. Form and place concrete for pipe thrust restraints at each change of pipe direction. Place concrete to permit full access to pipe and pipe accessories. Provide 4 square feet thrust restraint bearing on subsoil.

D. Do not backfill until installation has been approved and record drawings are up to date. Promptly install all piping after excavation or cutting for same has been done, so as to keep the excavations open as short a time as possible.

E. Backfill around sides and to top of pipe with cover fill, tamp in place and compact, then complete backfilling.

1. During back-filling/topsoiling of underground potable water piping, install continuous underground-type plastic line markers located directly over buried lines at 6 to 8 inches below finished grade.

3.04 INSTALLATION - PIPE

A. Maintain separation of water main from sewer piping in accordance with plumbing code.

B. Group piping with other site piping work whenever practical.

C. Establish elevations of buried piping to ensure not less than 2 feet of cover.

D. Install pipe to indicated elevation to within tolerance of 5/8 inches.

E. Install ductile iron piping and fittings to AWWA C600.

F. Install grooved and shouldered pipe joints to AWWA C606.

G. Polyvinyl Chloride Pipe: Install in accordance with manufacturer's installation instructions.

1. Pressure water lines (4 inch and larger): Install in accordance with pipe manufacturers recommendations, or as shown in J-M Installation Guide "Ring-Tite PVC Pipe". Provide thrust blocks as required by "J-M Installation Guide".

H. Route pipe in straight line.

I. Install pipe to allow for expansion and contraction without stressing pipe or joints.

J. Slope water pipe and position drains at low points.

K. Install trace wire 6 inches above top of pipe; coordinate with Section 31 23 23.

3.05 INSTALLATION - VALVES, HYDRANTS, BACKFLOW PREVENTERS

A. Check operation of all valves before installing. Install valves true to line and grade. Install valves in accordance with AWWA C600 and manufacturer's written instructions. Wrap all buried, ferrous metal valves with polyethylene film in conformance with Section 5-4 of AWWA C105/A21.5.

B. Set valves on solid bearing.

C. Install valves as indicated with stems pointing up. Provide valve box over underground valves.

D. Center and plumb valve box over valve. Set box cover flush with finished grade.

3.06 CORROSION PROTECTIVE COATING APPLICATION

A. Comply with NACE SP0169.

3.07 FIELD QUALITY CONTROL

A. See Section 01 40 00 - Quality Requirements, for additional requirements.

B. Perform field inspection and testing in accordance with Section 01 40 00.

C. Pressure test water piping to 200 pounds per square inch.

1. PVC Water Pipelines: Test all water lines in accordance with manufacturers recommendations.

2. Increase pressure in 50 psi increments and inspect each joint between increments. Hold at test pressure for one hour, decrease to 0 psi. Slowly increase again to test pressure and hold for one more hour.

3. Test fails if leakage exceeds 2-qts per hour per 100 gaskets or joints, irrespective of pipe diameter.

D. If tests indicate Work does not meet specified requirements, remove Work, replace and retest at no cost to District.

3.08 CLEANING

A. Clean and disinfect water-distribution piping as indicatedin Section 33 01 10.58 - Disinfection of Water Piping Systems.

END OF SECTION

SECTION 33 31 13
SITE SANITARY SEWERAGE PIPING

PART 1 GENERAL

1.01 SECTION INCLUDES

A. Sanitary sewerage system piping and appurtenances from a point 5 feet outside the building to the point of disposal.

B. Sanitary sewerage drainage piping, fittings, and accessories.

C. Connection of building sanitary drainage system to existing on-site.

D. Cleanout access.

1.02 PRODUCTS INSTALLED BUT NOT FURNISHED UNDER THIS SECTION

A. Supply of connection devices to building piping for placement by this Section.

1.03 RELATED REQUIREMENTS

A. Section 31 23 16 - Excavation: Excavating of trenches.

B. Section 31 23 16.13 - Trenching: Excavating, bedding, and backfilling.

C. Section 31 23 23 - Fill: Bedding and backfilling.

1.04 DEFINITIONS

A. Bedding: Fill placed under, beside and directly over pipe, prior to subsequent backfill operations.

1.05 REFERENCE STANDARDS

A. ASTM C443 - Standard Specification for Joints for Concrete Pipe and Manholes, Using Rubber Gaskets.

B. ASTM C564 - Standard Specification for Rubber Gaskets for Cast Iron Soil Pipe and Fittings.

C. ASTM C891 - Standard Practice for Installation of Underground Precast Concrete Utility Structures.

D. ASTM D2321 - Standard Practice for Underground Installation of Thermoplastic Pipe for Sewers and Other Gravity-Flow Applications.

E. ASTM D2564 - Standard Specification for Solvent Cements for Poly(Vinyl Chloride) (PVC) Plastic Piping Systems.

F. ASTM D3034 - Standard Specification for Type PSM Poly(Vinyl Chloride) (PVC) Sewer Pipe and Fittings.

G. ASTM D3212 - Standard Specification for Joints for Drain and Sewer Plastic Pipes Using Flexible Elastomeric Seals.

H. ASTM F477 - Standard Specification for Elastomeric Seals (Gaskets) for Joining Plastic Pipe.

I. SSPWC (Greenbook) - Standard Specifications for Public Works Construction.

J. City requirements.

1.06 ADMINISTRATIVE REQUIREMENTS

A. Coordination: Coordinate the installation of sewrwe line with size, location and installation of service utilities.

B. Preinstallation Meeting: Conduct a preinstallation meeting one week prior to the start of the work of this section; require attendance by all affected installers.

C. Sequencing: Ensure that utility connections are achieved in an orderly and expeditious manner.

1.07 SUBMITTALS

A. See Section 01 30 00 - Administrative Requirements, for submittal procedures.

B. Product Data: Provide data indicating pipe, pipe accessories.

C. Field Quality Control Submittals: Document results of field quality control testing.

D. Project Record Documents:

1. Submit documents under provisions of Section 01 78 00 - Closeout Submittals.
2. Record location of pipe runs, connections, manholes, cleanouts, and invert elevations.
3. Identify and describe unexpected variations to subsoil conditions or discovery of uncharted utilities.

1.08 REGULATORY REQUIREMENTS

A. Conform to applicable code for materials and installation of the Work of this section.

B. Comply with requirements of Local Plumbing Code, Health Department, and Authorities having jurisdiction.

C. Utility Compliance: Comply with local utility regulations and standards pertaining to sanitary sewerage systems.

D. Environmental Compliance: Comply with applicable portions of local environmental agency regulations pertaining to sanitary sewerage systems.

E. Permits: Obtain all required permits in name of Owner.

1.09 PROJECT CONDITIONS

A. Site Information: Perform site survey, research public utility records, and verify existing utility locations. Verify that storm sewerage system piping may be installed in compliance with original design and referenced standards.

1. Locate existing sanitary sewerage system piping and structures that are to be abandoned and closed.

1.10 SEQUENCING AND SCHEDULING

A. Coordinate connection to public sewer with utility company.

B. Coordinate with interior building sanitary drainage piping.

C. Coordinate with other utility work.

PART 2 PRODUCTS

2.01 SEWER PIPE MATERIALS

A. Provide products that comply with applicable code(s).

B. General: Provide pipe and pipe fitting materials compatible with each other. Where more than one type of materials or products is indicated, selection is Installer's option.

C. Plastic Pipe: ASTM D3034, Type SDR35, Poly(Vinyl Chloride) (PVC) material; inside nominal diameter of 4 to 8 inches, bell and spigot style solvent sealed joint end.

1. Solvent Cement: ASTM D2564.
2. Gaskets: ASTM F477, elastomeric seal.
3. Pipe Joints: ASTM D3212.

D. Joint Seals: Mechanical clamp ring type, stainless steel expanding and contracting sleeve, neoprene ribbed gasket for positive seal.

E. Fittings: Same material as pipe molded or formed to suit pipe size and end design, in required wyes, bends, cleanouts, reducers, traps and other configurations required.

2.02 PIPE ACCESSORIES

A. Cleanouts: Provide cast-iron ferrule and countersunk brass cleanout plug, with round cast-iron access frame and heavy-duty, secured, scoriated cast-iron cover.

1. Acceptable Manufacturers:
   a. Ancon, Inc.
   b. Josam Co.
   c. Smith (Jay R.) Mfg. Co.
   d. Wade Div.; Tyler Pipe.
   e. Zurn Industries, Inc.; Hydromechanics Div.
   f. Substitutions: See Section 01 60 00 - Product Requirements.

B. Trace Wire: Magnetic detectable conductor, clear plastic covering, imprinted with "Sewer Service" in large letters.

C. Underground Warning Tapes: Polyethylene plastic tape with metallic core, 6 inches wide by 4 mils thick, solid green in color with continuously printed caption in black letters "CAUTION - SEWER LINE BURIED BELOW."

1. Allen Systems, Inc.; Reef Industries, Inc.
2. Brady (W.H.) Co.; Signmark Div.
3. Calpico, Inc.
4. Carlton Industries, Inc.
5. EMED Co., Inc.
6. Seton Name Plate Co.

D. Couplings: Rubber or elastomeric compression gasket, made to match pipe inside diameter or hub, and adjoining pipe outside diameter.

1. Gaskets: ASTM C425, rubber for vitrified clay pipe; ASTM C443, rubber for concrete pipe; ASTM C564, rubber for cast-iron soil pipe; and ASTM F477, elastomeric seal for plastic pipe. Gaskets for dissimilar or other pipe materials shall be compatible with pipe materials being jointed.

E. Fittings: Same material as pipe molded or formed to suit pipe size and end design, in required wyes, bends, cleanouts, reducers, traps and other configurations required.

F. Corrosivity Protection: All underground metallic pipe and fittings shall be protected from corrosive soils by 8 mil minimum polyethylene sheet.

2.03 BEDDING AND COVER MATERIALS

A. Pipe Bedding Material: As specified in Division 31 - Earthwork and applicable City or County Standards.

B. Pipe Cover Material: As specified in Division 31 - Earthwork and applicable City or County Standards.

PART 3 EXECUTION

3.01 GENERAL

A. Perform work in accordance with applicable code(s).

B. General Locations and Arrangements: Drawings (plans and details) indicate the general location and arrangement of the underground sanitary sewerage system piping. Location and arrangement of piping layout take into account many design considerations. Install the piping as indicated, to the extent practical.

C. Install piping beginning at low point of systems, true to grades and alignment indicated with unbroken continuity of invert. Place bell ends of piping facing upstream. Install gaskets, seals, sleeves, and couplings in accordance with manufacturer's recommendations for use of lubricants, cements, and other installation requirements.

D. Use fittings for branch connections, except where direct tap into existing sewer or manhole is indicated.

E. Use proper size increasers and couplings, where different size or material of pipes and fittings are connected. Reduction of the size of piping in the direction of flow is prohibited.

F. Install piping pitched down in direction of flow, at minimum slope of 2 percent, except where indicated otherwise.

1. Place bell ends of piping facing upstream.

G. No pipe shall be laid in water and all costs for drainage and/or dewatering trenches during construction shall be borne by the Contractor.

3.02 TRENCHING

A. See Division 31 - Earthwork for additional requirements.

B. Hand trim excavation for accurate placement of pipe to elevations indicated.

1. Correct over excavation in accordance with the Section in Division 31.

2. Remove large stones or other hard matter which could damage pipe or impede consistent backfilling or compaction.

C. Backfill around sides and to top of pipe with cover fill, tamp in place and compact, then complete backfilling.

D. If during the installation of pipe, the trench material, backfill material is found to be unsuitable, as determined by the Engineer, it shall be removed and replaced by crushed rock as defined by SSPWC (Greenbook) 200-2.2 or 200-2.3 except that minimum sand equivalent value shall be 30. Any excess material that is generated by this process shall be disposed of by the Contractor at no additional cost to the District.

E. Bedding:

1. Excavate pipe trench in accordance with the Section in Division 31 for work of this Section. Hand trim excavation for accurate placement of pipe to elevations indicated.
2. Place bedding material at trench bottom, level materials in continuous layer not exceeding 6 inches compacted depth, compact to 95 percent.
3. Maintain optimum moisture content of bedding material to attain required compaction density.

3.03 EXAMINATION

A. Verify that trench cut is ready to receive work and excavations, dimensions, and elevations are as indicated on layout drawings.

B. Inspect piping before installation to detect apparent defects. Mark defective materials with white paint and promptly remove from site.

C. Unless specified otherwise, all buried piping shall have coverage of at least three feet between top of pipe and finished grade.

3.04 INSTALLATION - PIPE

A. Verify that trench cut is ready to receive work and excavations, dimensions, and elevations are as indicated on layout drawings.

B. Pipe Applications For Underground Sanitary Sewers

1. Pipe Sizes 15 inches and Smaller: PVC gasket joint sewer pipe and fittings.
2. Pipe Sizes 1-1/2 to 10 Inches: Hubless cast-iron soil pipe and fittings.

C. Install pipe, fittings, and accessories in accordance with manufacturer's instructions. Seal watertight.

1. Plastic Pipe: Also comply with ASTM D2321.
2. Pipe shall be assembled by hand or by use of a bar and block or by lever puller. No swinging or stabbing shall be permitted. The "popping-on" of joints is expressly forbidden. All bell and spigot type connection shall be marked on the spigot end to indicate full insertion.

D. Lay pipe to slope gradients noted on layout drawings; with maximum variation from true slope of 1/8 inch in 10 feet.

E. Connect to building sanitary sewer outlet and municipal sewer system , through installed sleeves.

F. Install trace wire 6 inches above top of pipe; coordinate with the Section in Dvision 31 - Earthwork.

3.05 PIPE JOINT CONSTRUCTION AND INSTALLATION

A. Join and install hubless cast iron soil pipe and fittings, with "Best" or "MG" cast-iron couplings with neoprene gaskets. Stainless steel couplings not acceptable below grade.

B. Join and install PVC pipe as follows:

1. Pipe and gasketed fittings, joining with elastomeric seals.
2. Installation in accordance with ASTM D2321.

C. Join different types of pipe with standard manufactured couplings and fittings intended for that purpose.

3.06 INSTALLATION MANHOLES

A. Install manholes complete with accessories as indicated. Form continuous concrete or split pipe section channels and benches between inlets and outlet. Set tops of frames and covers flush with finish surface where manholes occur in pavements. Elsewhere, set tops 3 inches above finish surface, unless otherwise indicated.

B. Place pre-cast concrete manhole sections as indicated, and install in accordance with ASTM C891.

C. Provide rubber joint gasket complying with ASTM C443 at joints of sections.

D. Apply bituminous mastic coating at joints of sections.

3.07 INSTALLATION - CLEANOUTS

A. Install cleanouts and extension from sewer pipe to cleanout at grade as indicated. Set cleanout frame and cover in concrete block 18 by 18 by 12 inches deep, except where location is in concrete paving. Set top of cleanout 1 inch above surrounding earth grade or flush with grade when installing in paving.

1. Provide as shown on plans and as required by Plumbing Code.

B. Form bottom of excavation clean and smooth to correct elevation.

C. Form and place cast-in-place concrete base pad, with provision for sanitary sewer pipe end sections.

D. Establish elevations and pipe inverts for inlets and outlets as indicated.

E. Mount lid and frame level in grout, secured to top cone section to elevation indicated.

3.08 TAP CONNECTIONS

A. Make connections to existing piping and underground structures so that finished work will conform as nearly as practicable to the requirements specified for new work.

B. Use commercially manufactured wye fittings for piping branch connections. Remove section of existing pipe, install wye fitting into existing piping, and encase entire wye fitting plus 6-inch overlap, with not less than 6 inches of 3000 psi 28-day compressive-strength concrete.

C. Protect existing piping and structures to prevent concrete or debris from entering while making tap connections. Remove debris, concrete, or other extraneous material that may accumulate.

3.09 FIELD QUALITY CONTROL

A. Perform field inspection and testing in accordance with Section 01 40 00.

B. Perform testing of completed piping in accordance with local authorities having jurisdiction.

C. Request inspection prior to and immediately after placing bedding.

D. Interior Inspection: Inspect piping to determine whether line displacement or other damage has occurred.

1. Make inspections after pipe between manholes and manhole locations has been installed and approximately 2 feet of backfill is in place, and again at completion of project.
2. All sewer mains constructed and to become part of the public sewer system shall be digitally recorded by the City prior to acceptance of the sewer system for maintenance by the City.
3. If inspection indicates poor alignment, debris, displaced pipe, infiltration or other defects correct such defects, and reinspect.
4. Perform video inspection of all piping prior to final acceptance of work.
   a. All video operations shall be recorded digitally for playback if required.
   b. All video inspections will include a detailed narrative identifying exact locations of the installed lines and limits of areas to be re-installed.

E. If tests indicate Work does not meet specified requirements, remove Work, replace and retest at no cost to District.

F. Reinspect after any corrections, include video recording.

3.10 CLEANING

A. Cleaning: Clear interior of piping and structures of dirt and other superfluous material as work progresses. Maintain swab or drag in piping and pull past each joint as it is completed.

1. Place plugs in ends of uncompleted pipe at end of day or whenever work stops.
2. Flush piping between manholes, if required by local authority, to remove collected debris.

3.11 PROTECTION

A. Protect finished installation under provisions of Section 01 50 00 - Temporary Facilities and Controls.

B. Protect pipe and bedding cover from damage or displacement until backfilling operation is in progress.

END OF SECTION